(12) INTERNATIONAL APPLICATION PUBLISHED UNDER THE PATENT COOPERATION TREATY (PCT)

(19) World Intellectual Property Organization
International Bureau

(43) International Publication Date
11 October 2012 (11.10.2012)

WIPO | PCT

(10) International Publication Number
WO 2012/138799 A1

(51) International Patent Classification:
B64D 11/06 (2006.01)

(21) International Application Number:
PCT/US2012/032225

(22) International Filing Date:
4 April 2012 (04.04.2012)

(25) Filing Language: English

(26) Publication Language: English

(30) Priority Data:
61/516,586 4 April 2011 (04.04.2011) US
61/616,362 27 March 2012 (27.03.2012) US

(71) Applicant *(for all designated States except US)*: **C&D ZODIAC, INC.** [US/US]; 5701 Bolsa Avenue, Huntington Beach, CA 92647 (US).

(72) Inventor; and
(75) Inventor/Applicant *(for US only)*: **SAVIAN, Scott** [US/US]; 5701 Bolsa Avenue, Huntington Beach, CA 92647 (US).

(74) Agents: **SWAIN, Brennan, C.** et al.; Jeffer Mangels Butler & Mitchell LLP, 1900 Avenue of the Stars, 7th Floor, Los Angeles, CA 90067-4308 (US).

(81) Designated States *(unless otherwise indicated, for every kind of national protection available)*: AE, AG, AL, AM, AO, AT, AU, AZ, BA, BB, BG, BH, BR, BW, BY, BZ, CA, CH, CL, CN, CO, CR, CU, CZ, DE, DK, DM, DO, DZ, EC, EE, EG, ES, FI, GB, GD, GE, GH, GM, GT, HN, HR, HU, ID, IL, IN, IS, JP, KE, KG, KM, KN, KP, KR, KZ, LA, LC, LK, LR, LS, LT, LU, LY, MA, MD, ME, MG, MK, MN, MW, MX, MY, MZ, NA, NG, NI, NO, NZ, OM, PE, PG, PH, PL, PT, QA, RO, RS, RU, RW, SC, SD, SE, SG, SK, SL, SM, ST, SV, SY, TH, TJ, TM, TN, TR, TT, TZ, UA, UG, US, UZ, VC, VN, ZA, ZM, ZW.

(84) Designated States *(unless otherwise indicated, for every kind of regional protection available)*: ARIPO (BW, GH, GM, KE, LR, LS, MW, MZ, NA, RW, SD, SL, SZ, TZ, UG, ZM, ZW), Eurasian (AM, AZ, BY, KG, KZ, MD, RU, TJ, TM), European (AL, AT, BE, BG, CH, CY, CZ, DE, DK, EE, ES, FI, FR, GB, GR, HR, HU, IE, IS, IT, LT, LU, LV, MC, MK, MT, NL, NO, PL, PT, RO, RS, SE, SI, SK, SM, TR), OAPI (BF, BJ, CF, CG, CI, CM, GA, GN, GQ, GW, ML, MR, NE, SN, TD, TG).

Published:

— *with international search report (Art. 21(3))*

— *with amended claims (Art. 19(1))*

(54) **Title**: SEAT SHELL AND INTEGRATED OVERHEAD STORAGE BIN

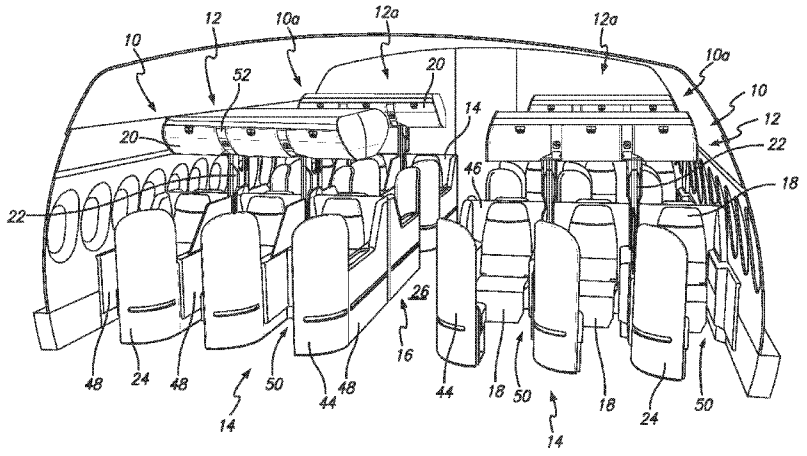

FIG. 1

(57) **Abstract**: A lounge assembly configured to be positioned in the interior of an aircraft. The lounge assembly includes a first seat shell configured to at least partially surround a passenger seat, and an overhead storage bin assembly. The overhead storage bin assembly includes first and second posts configured to be secured to a floor of the aircraft, and an overhead bin housing supported by the first and second posts. The overhead bin housing includes at least a first overhead storage bin that is positioned generally above the first seat shell.

WO 2012/138799 A1