(12) INTERNATIONAL APPLICATION PUBLISHED UNDER THE PATENT COOPERATION TREATY (PCT)

(19) World Intellectual Property Organization
International Bureau

(43) International Publication Date
14 February 2008 (14.02.2008)

PCT

(10) International Publication Number
WO 2008/017610 A1

(51) International Patent Classification:
B63B 21/50 (2006.01)

(21) International Application Number:
PCT/EP2007/057862

(22) International Filing Date: 31 July 2007 (31.07.2007)

(25) Filing Language: English

(26) Publication Language: English

(30) Priority Data:
06118528.6 7 August 2006 (07.08.2006) EP

(71) Applicant *(for all designated States except US)*: **Bluewater Energy Services B.V.** [NL/NL]; Marsstraat 33, NL-2132 HR Hoofddorp (NL).

(72) Inventors; and

(75) Inventors/Applicants *(for US only)*: **HEIDEMAN, Rik Robert** [NL/NL]; Achterweg 5, NL-2103 SW Heemstede (NL). **TER HORST, Hendrik Cornelis Ynze** [NL/NL]; Pieter de Hooghstraat 39, NL-2102 BX Heemstede (NL). **VAN DER NAT, Clemens Gerardus Johannes Maria** [NL/NL]; Zalmforelvijver 5, NL-2492 MR Den Haag (NL). **BURGER, Pieter Cornelis** [NL/NL]; Witlofakker 8, NL-2723 TW Zoetermeer (NL).

(74) Agent: **VONCKEN, Bartholomeus Maria C**; Overschiestraat 180, NL-1062 XK Amsterdam (NL).

(81) Designated States *(unless otherwise indicated, for every kind of national protection available)*: AE, AG, AL, AM, AT, AU, AZ, BA, BB, BG, BH, BR, BW, BY, BZ, CA, CH, CN, CO, CR, CU, CZ, DE, DK, DM, DO, DZ, EC, EE, EG, ES, FI, GB, GD, GE, GH, GM, GT, HN, HR, HU, ID, IL, IN, IS, JP, KE, KG, KM, KN, KP, KR, KZ, LA, LC, LK, LR, LS, LT, LU, LY, MA, MD, ME, MG, MK, MN, MW, MX, MY, MZ, NA, NG, NI, NO, NZ, OM, PG, PH, PL, PT, RO, RS, RU, SC, SD, SE, SG, SK, SL, SM, SV, SY, TJ, TM, TN, TR, TT, TZ, UA, UG, US, UZ, VC, VN, ZA, ZM, ZW.

(84) Designated States *(unless otherwise indicated, for every kind of regional protection available)*: ARIPO (BW, GH, GM, KE, LS, MW, MZ, NA, SD, SL, SZ, TZ, UG, ZM, ZW), Eurasian (AM, AZ, BY, KG, KZ, MD, RU, TJ, TM), European (AT, BE, BG, CH, CY, CZ, DE, DK, EE, ES, FI, FR, GB, GR, HU, IE, IS, IT, LT, LU, LV, MC, MT, NL, PL, PT, RO, SE, SI, SK, TR), OAPI (BF, BJ, CF, CG, CI, CM, GA, GN, GQ, GW, ML, MR, NE, SN, TD, TG).

Published:
— *with international search report*

(54) **Title:** VESSEL WITH MOORING SYSTEM, AND MOORING SYSTEM

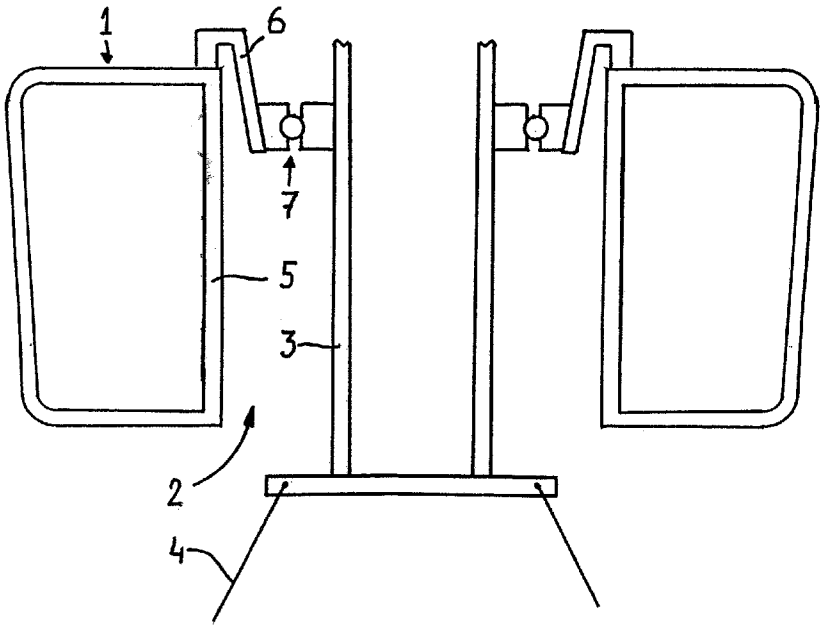

(57) **Abstract:** Vessel (1) with mooring system, comprising a turret (3) anchored to the seabed and a turret casing (5) being part of the vessel, wherein the turret and turret casing are interconnected by a connecting element (6) comprising a bearing arrangement (7) and wherein the connecting element has a first end con nected to the turret casing and an opposite second end con nected to the turret. The connecting element is positioned in such a manner that it experiences tensile forces. When the turret downwardly loads the turret casing the first end of the connecting element is positioned at a higher level then the second end thereof. When the turret upwardly loads the turret casing the first end of the connecting element is positioned at a lower level then the second end thereof.

WO 2008/017610 A1