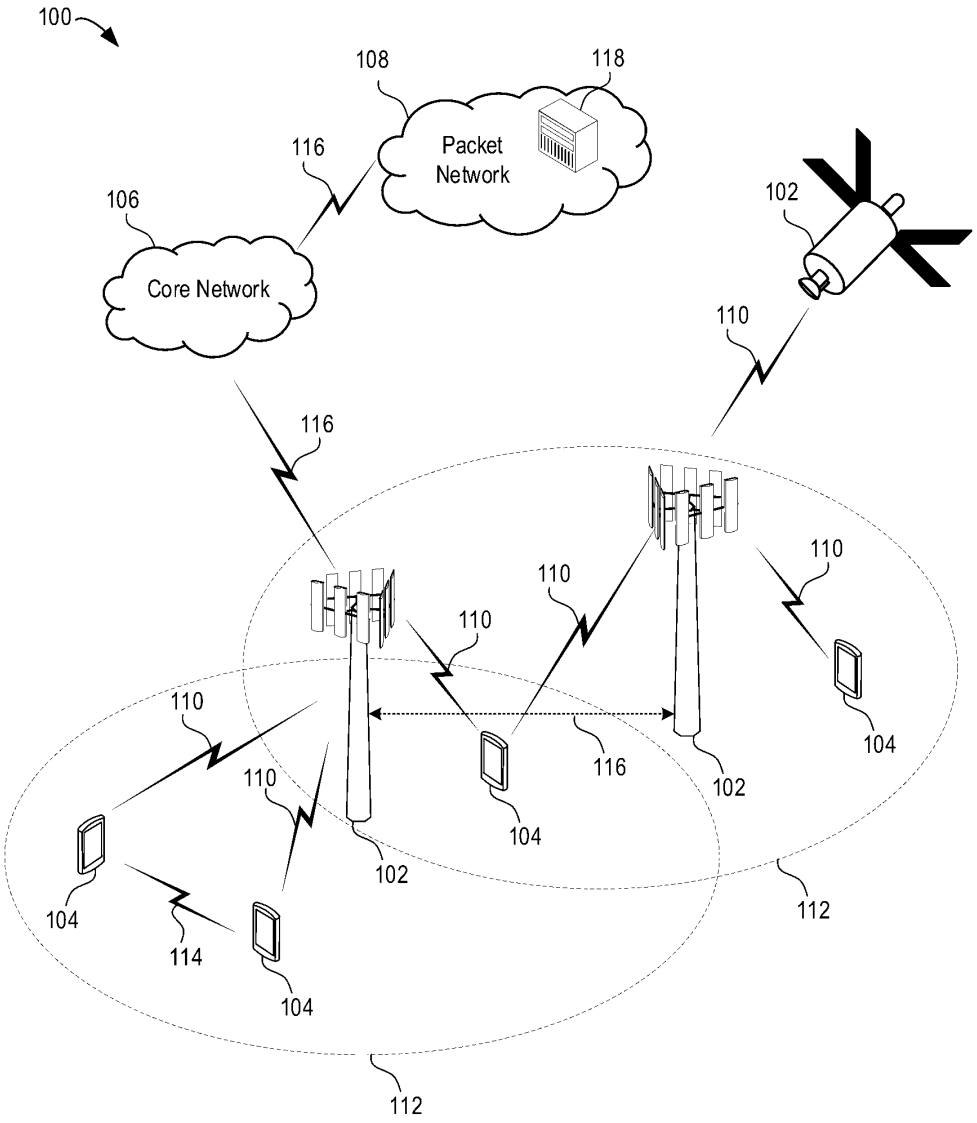
100
108
118
Packet Network
116
106
Core Network
102
110
116
110
110
110
110
110
104
116
102
104
102
104
114
104
112
112

FIG. 1

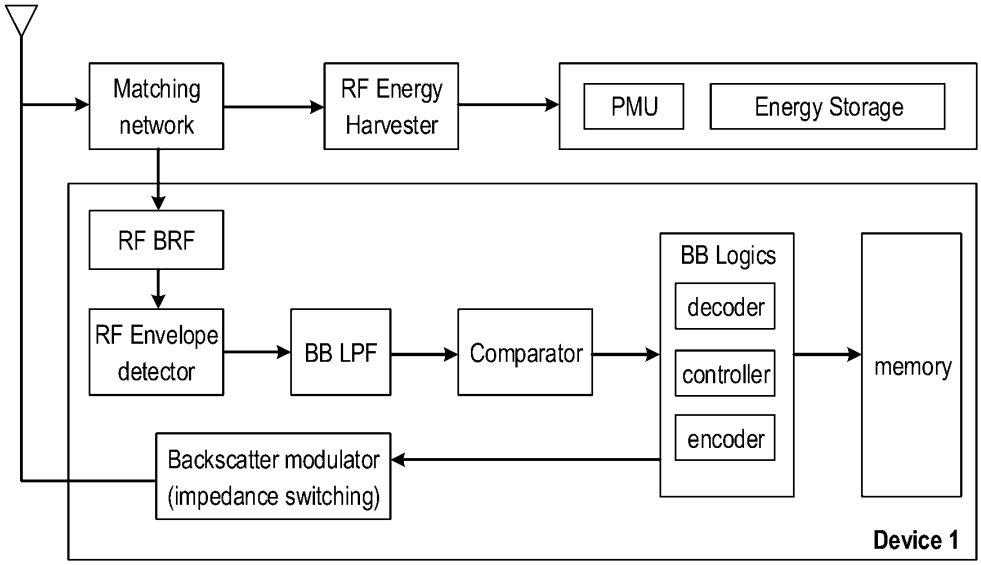
Matching network
RF Energy Harvester
PMU
Energy Storage
RF BRF
RF Envelope detector
BB LPF
Comparator
BB Logics
decoder
controller
encoder
memory
Backscatter modulator (impedance switching)
Device 1

FIG. 2A

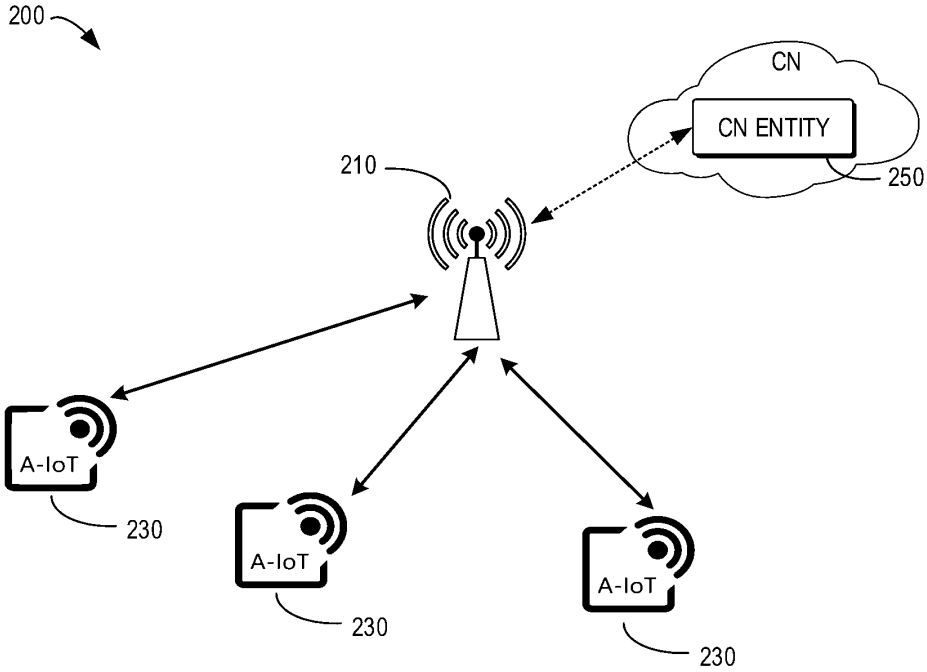
200
CN
CN ENTITY
250
210
A-IoT
230
A-IoT
230
A-IoT
230

FIG. 2B

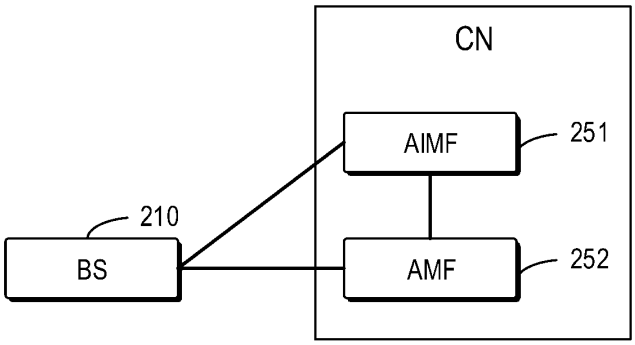

FIG. 2C

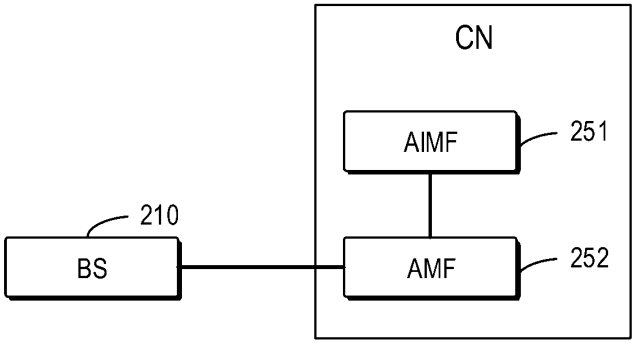

FIG. 2D

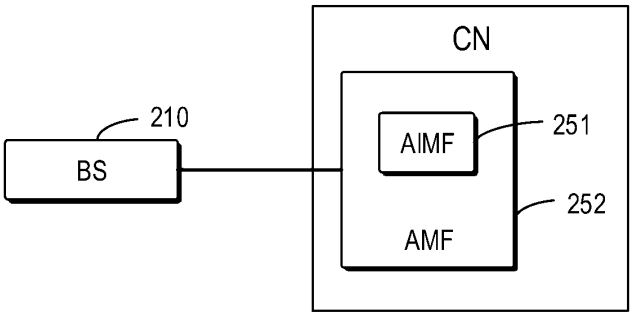

FIG. 2E

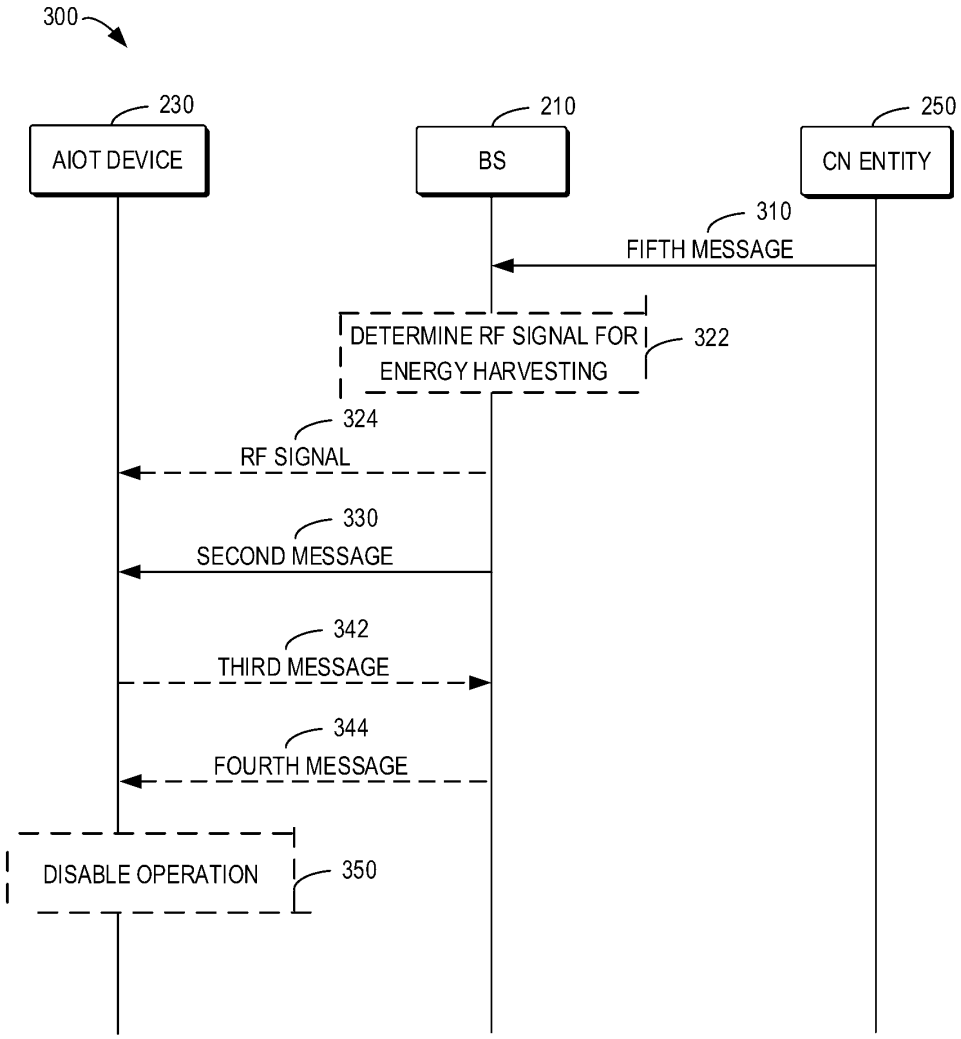
300
230
AIOT DEVICE
210
BS
250
CN ENTITY
310
FIFTH MESSAGE
DETERMINE RF SIGNAL FOR ENERGY HARVESTING
322
324
RF SIGNAL
330
SECOND MESSAGE
342
THIRD MESSAGE
344
FOURTH MESSAGE
DISABLE OPERATION
350

FIG. 3

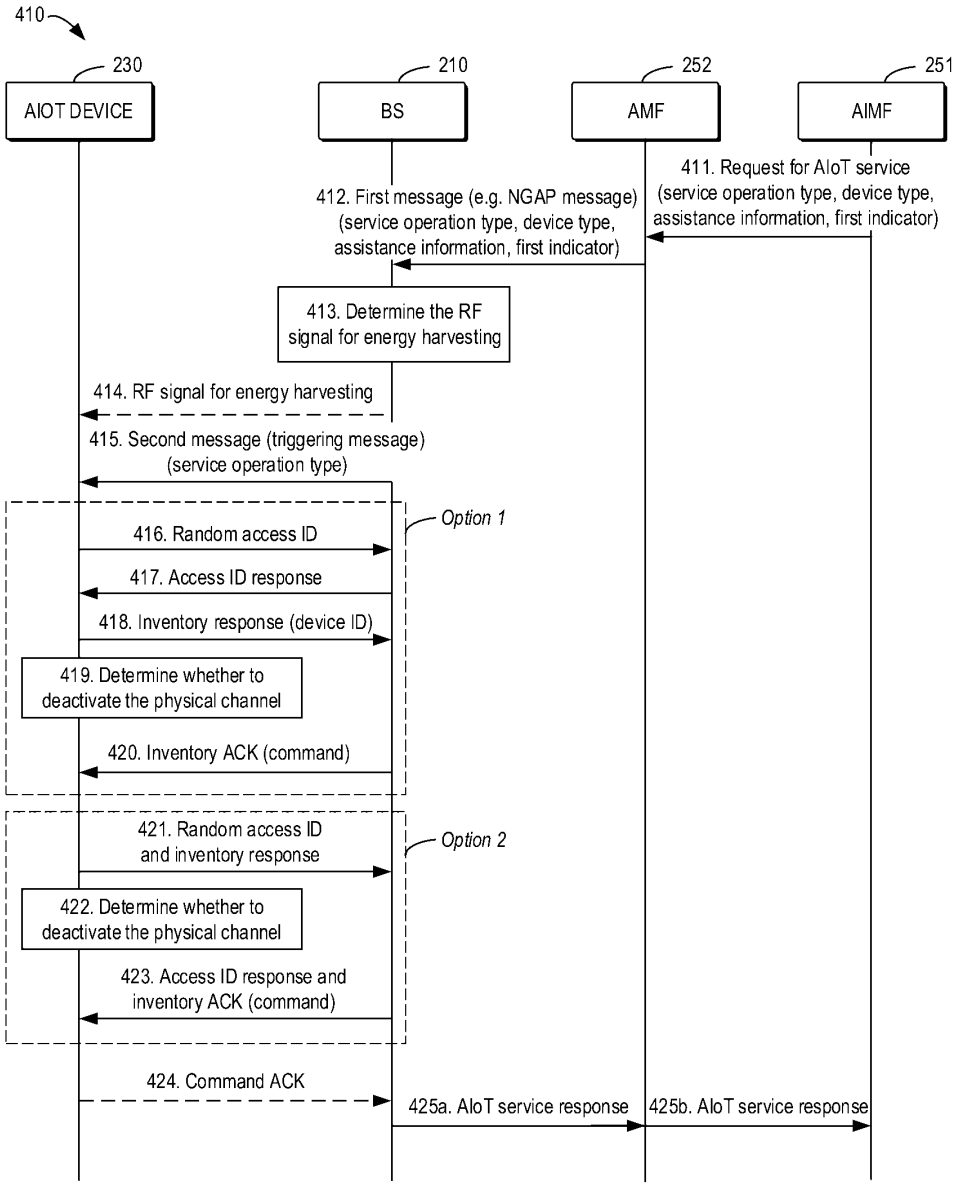
410
230
AIOT DEVICE
210
BS
252
AMF
251
AIMF
411. Request for AIoT service (service operation type, device type, assistance information, first indicator)
412. First message (e.g. NGAP message) (service operation type, device type, assistance information, first indicator)
413. Determine the RF signal for energy harvesting
414. RF signal for energy harvesting
415. Second message (triggering message) (service operation type)
Option 1
416. Random access ID
417. Access ID response
418. Inventory response (device ID)
419. Determine whether to deactivate the physical channel
420. Inventory ACK (command)
Option 2
421. Random access ID and inventory response
422. Determine whether to deactivate the physical channel
423. Access ID response and inventory ACK (command)
424. Command ACK
425a. AIoT service response
425b. AIoT service response

FIG. 4A

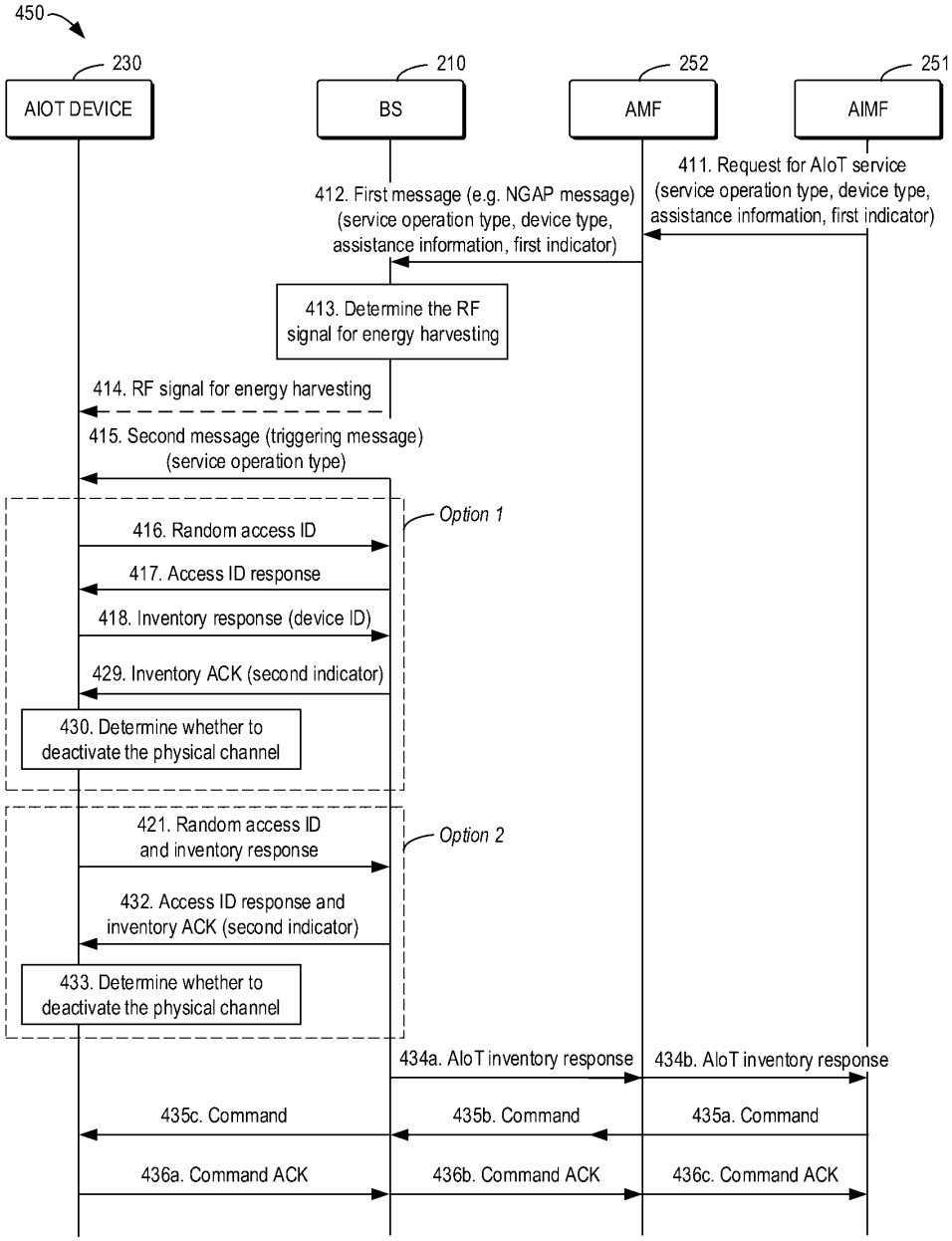
450
230
AIOT DEVICE
210
BS
252
AMF
251
AIMF
411. Request for AIoT service (service operation type, device type, assistance information, first indicator)
412. First message (e.g. NGAP message) (service operation type, device type, assistance information, first indicator)
413. Determine the RF signal for energy harvesting
414. RF signal for energy harvesting
415. Second message (triggering message) (service operation type)
Option 1
416. Random access ID
417. Access ID response
418. Inventory response (device ID)
429. Inventory ACK (second indicator)
430. Determine whether to deactivate the physical channel
Option 2
421. Random access ID and inventory response
432. Access ID response and inventory ACK (second indicator)
433. Determine whether to deactivate the physical channel
434a. AIoT inventory response
434b. AIoT inventory response
435c. Command
435b. Command
435a. Command
436a. Command ACK
436b. Command ACK
436c. Command ACK

FIG. 4B

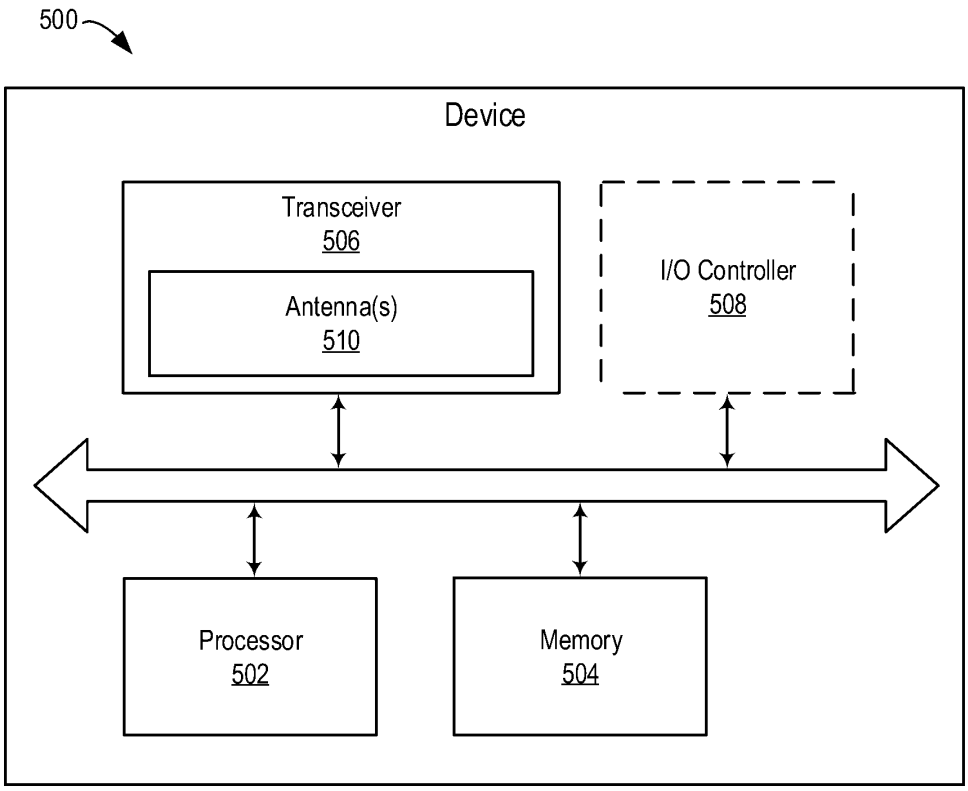
500
Device
Transceiver
506
Antenna(s)
510
I/O Controller
508
Processor
502
Memory
504

FIG. 5

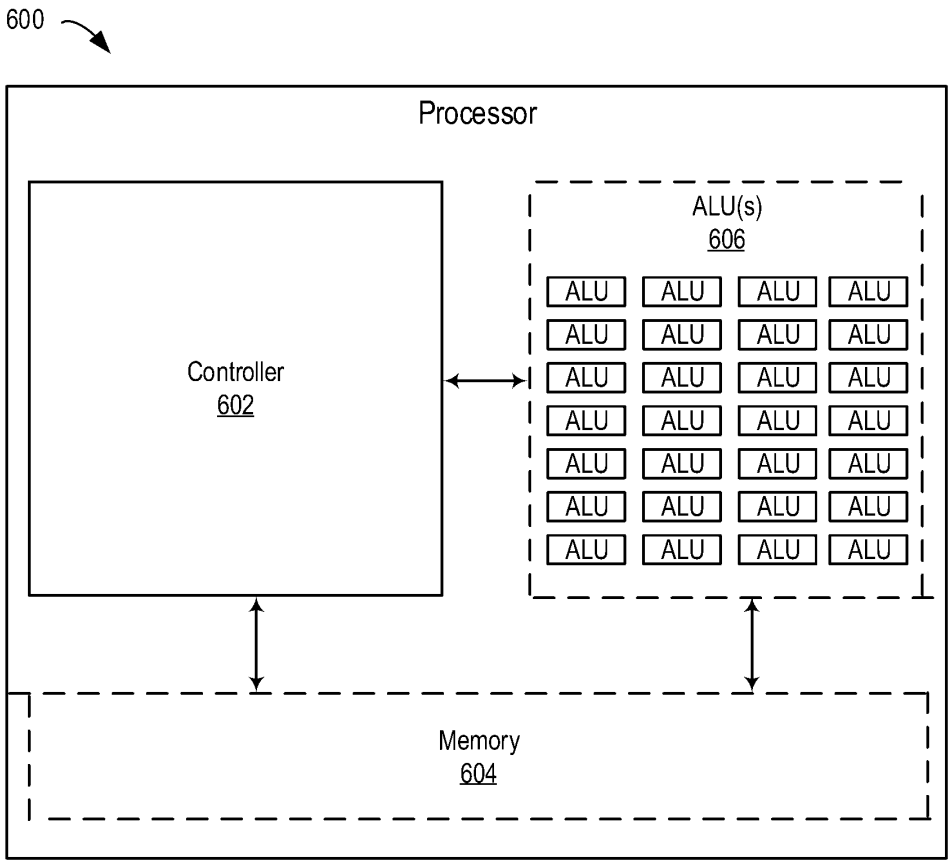

FIG. 6

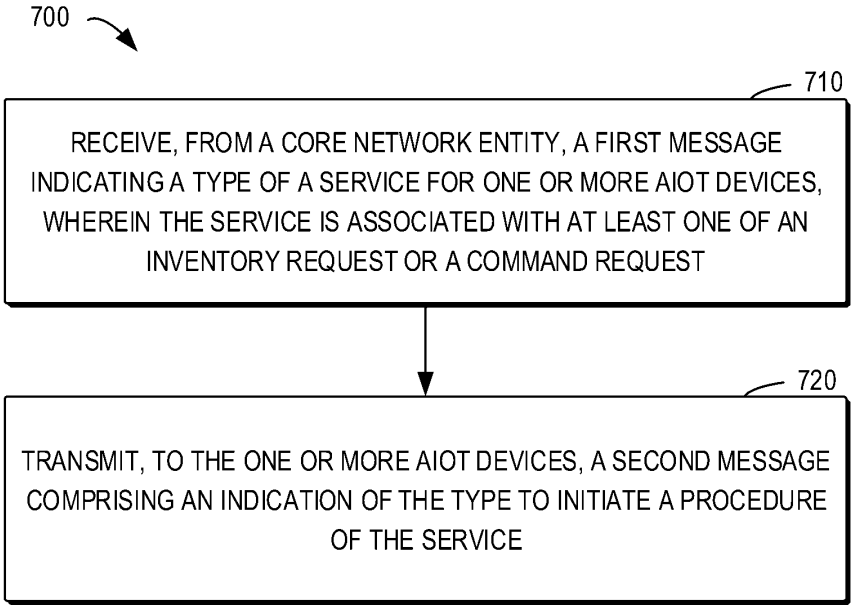
700
710
RECEIVE, FROM A CORE NETWORK ENTITY, A FIRST MESSAGE INDICATING A TYPE OF A SERVICE FOR ONE OR MORE AIOT DEVICES, WHEREIN THE SERVICE IS ASSOCIATED WITH AT LEAST ONE OF AN INVENTORY REQUEST OR A COMMAND REQUEST
720
TRANSMIT, TO THE ONE OR MORE AIOT DEVICES, A SECOND MESSAGE COMPRISING AN INDICATION OF THE TYPE TO INITIATE A PROCEDURE OF THE SERVICE

FIG. 7

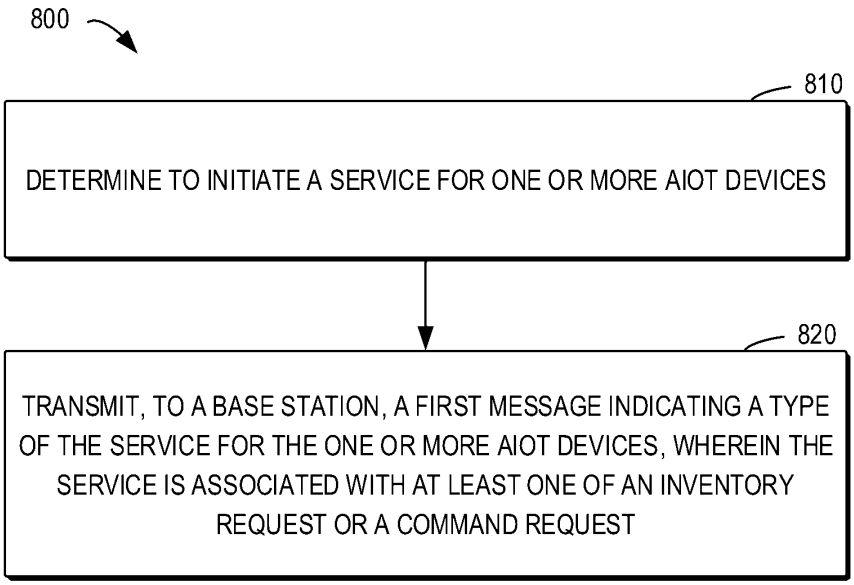
800
810
DETERMINE TO INITIATE A SERVICE FOR ONE OR MORE AIOT DEVICES
820
TRANSMIT, TO A BASE STATION, A FIRST MESSAGE INDICATING A TYPE OF THE SERVICE FOR THE ONE OR MORE AIOT DEVICES, WHEREIN THE SERVICE IS ASSOCIATED WITH AT LEAST ONE OF AN INVENTORY REQUEST OR A COMMAND REQUEST

FIG. 8

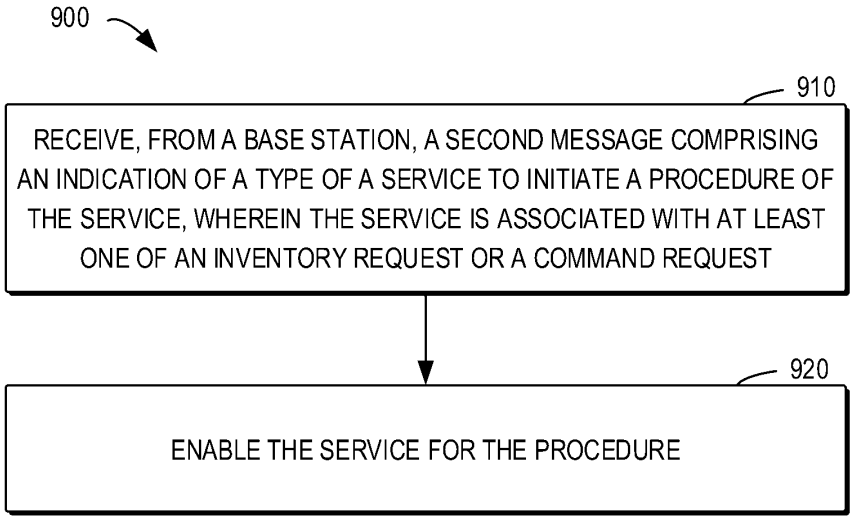
900
910
RECEIVE, FROM A BASE STATION, A SECOND MESSAGE COMPRISING AN INDICATION OF A TYPE OF A SERVICE TO INITIATE A PROCEDURE OF THE SERVICE, WHEREIN THE SERVICE IS ASSOCIATED WITH AT LEAST ONE OF AN INVENTORY REQUEST OR A COMMAND REQUEST
920
ENABLE THE SERVICE FOR THE PROCEDURE

FIG. 9