(12) INTERNATIONAL APPLICATION PUBLISHED UNDER THE PATENT COOPERATION TREATY (PCT)

(19) World Intellectual Property Organization
International Bureau

(43) International Publication Date
3 December 2009 (03.12.2009)

PCT

(10) International Publication Number
WO 2009/143599 A1

(51) International Patent Classification:
B61F 13/00 (2006.01) *B61F 5/38* (2006.01)
B61B 13/04 (2006.01) *B61F 5/42* (2006.01)
B61B 13/06 (2006.01) *B61F 5/50* (2006.01)
B61F 3/00 (2006.01) *B61G 5/02* (2006.01)

(21) International Application Number:
PCT/CA2009/000161

(22) International Filing Date:
6 February 2009 (06.02.2009)

(25) Filing Language: English

(26) Publication Language: English

(30) Priority Data:
12/129,222 29 May 2008 (29.05.2008) US

(71) Applicant *(for all designated States except US)*: **BOMBARDIER TRANSPORTATION GMBH** [DE/DE]; Saatwinkler Damn 43, 13627 Berlin (DE).

(72) Inventor; and

(75) Inventor/Applicant *(for US only)*: **TIMAN, Peter, Edward** [CA/CA]; 3064 Freeman Road RR#1, Sydenham, Ontario KOH 2TO (CA).

(74) Agent: **SMART & BIGGAR**; 1000 De La Gauchetiere Street West, Suite 3300, Montreal, Quebec H3B 4W5 (CA).

(81) Designated States *(unless otherwise indicated, for every kind of national protection available)*: AE, AG, AL, AM, AO, AT, AU, AZ, BA, BB, BG, BH, BR, BW, BY, BZ, CA, CH, CN, CO, CR, CU, CZ, DE, DK, DM, DO, DZ, EC, EE, EG, ES, FI, GB, GD, GE, GH, GM, GT, HN, HR, HU, ID, IL, IN, IS, JP, KE, KG, KM, KN, KP, KR, KZ, LA, LC, LK, LR, LS, LT, LU, LY, MA, MD, ME, MG, MK, MN, MW, MX, MY, MZ, NA, NG, NI, NO, NZ, OM, PG, PH, PL, PT, RO, RS, RU, SC, SD, SE, SG, SK, SL, SM, ST, SV, SY, TJ, TM, TN, TR, TT, TZ, UA, UG, US, UZ, VC, VN, ZA, ZM, ZW.

(84) Designated States *(unless otherwise indicated, for every kind of regional protection available)*: ARIPO (BW, GH, GM, KE, LS, MW, MZ, NA, SD, SL, SZ, TZ, UG, ZM, ZW), Eurasian (AM, AZ, BY, KG, KZ, MD, RU, TJ, TM), European (AT, BE, BG, CH, CY, CZ, DE, DK, EE, ES, FI, FR, GB, GR, HR, HU, IE, IS, IT, LT, LU, LV, MC, MK, MT, NL, NO, PL, PT, RO, SE, SI, SK, TR), OAPI (BF, BJ, CF, CG, CI, CM, GA, GN, GQ, GW, ML, MR, NE, SN, TD, TG).

Published:

— *with international search report (Art. 21(3))*

(54) **Title**: A MONORAIL BOGIE ASSEMBLY COMPRISING A LINKING MEMBER

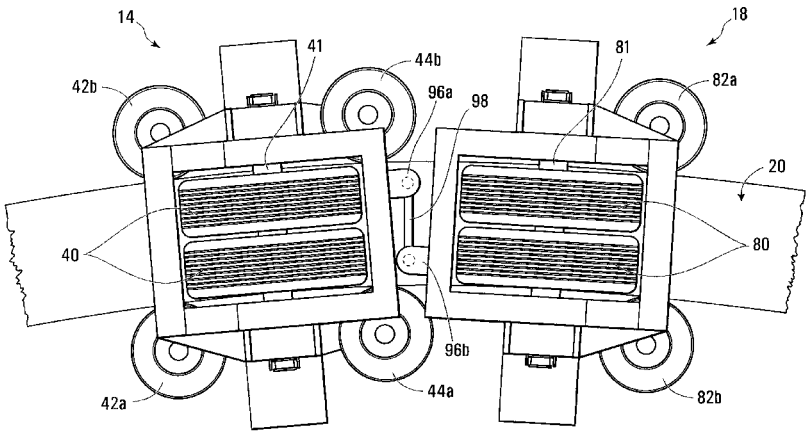

FIG. 13

(57) **Abstract**: A monorail bogie assembly for supporting at least one monorail car over a monorail track that has a running surface and two side surfaces. The monorail bogie assembly comprises a first monorail bogie for supporting a first monorail car. The first monorail bogie comprises at least one load-bearing wheel, two inboard guide wheels and two outboard guide wheels. The monorail bogie assembly further comprises a second monorail bogie for supporting a second monorail car. The second monorail bogie comprises at least one load-bearing wheel and two inboard guide wheels. The monorail bogie assembly further comprises a linking member for interconnecting the first monorail bogie and the second monorail bogie, such that when connected the second monorail bogie is absent any outboard guide wheels.

WO 2009/143599 A1