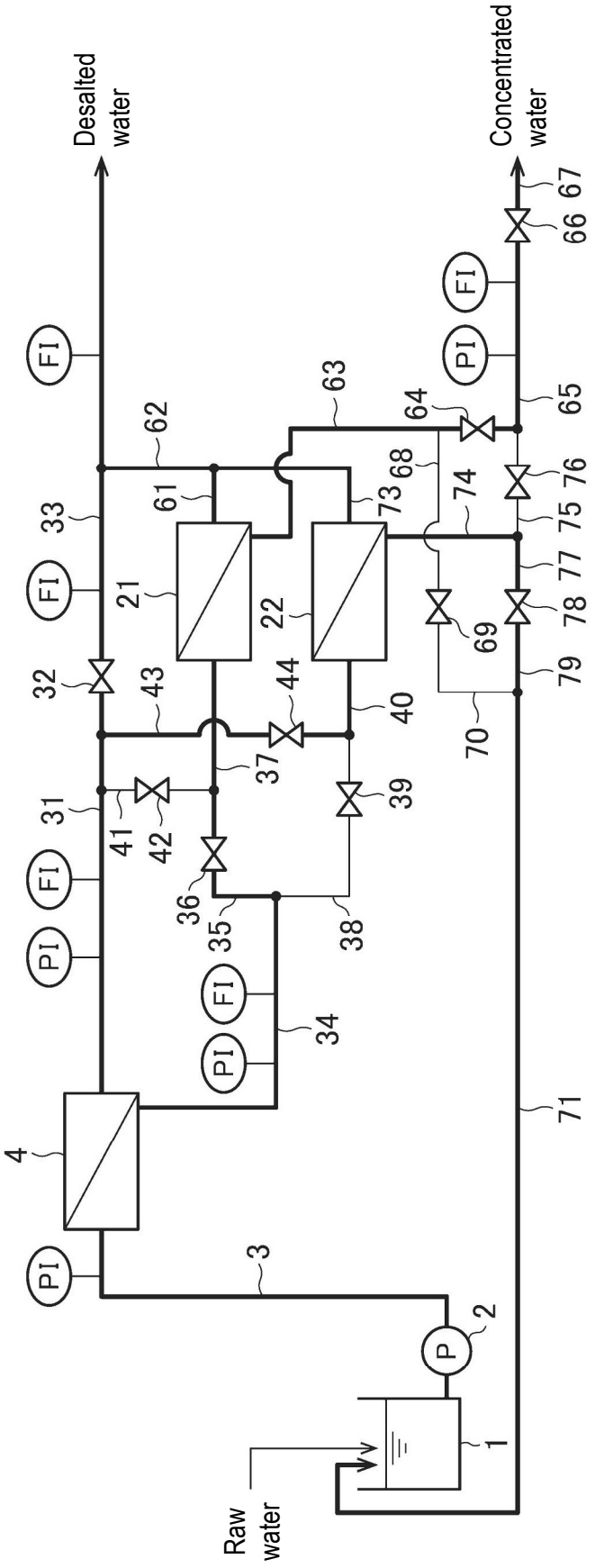
Desalted water
Concentrated water
Raw water
FI
PI
P
1
2
3
4
21
22
31
32
33
34
35
36
37
38
39
40
41
42
43
44
61
62
63
64
65
66
67
68
69
70
71
73
74
75
76
77
78
79

FIG. 1

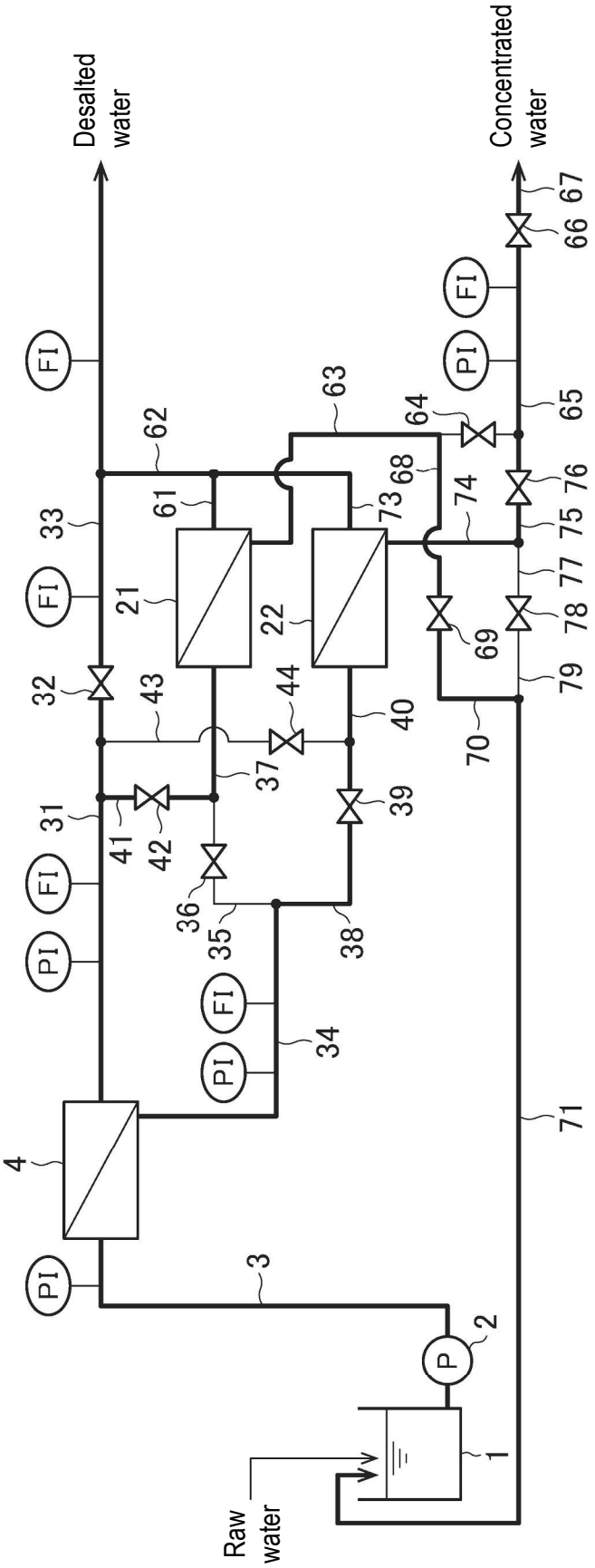
Desalted water
Concentrated water
Raw water
FI
PI
P
1
2
3
4
21
22
31
32
33
34
35
36
37
38
39
40
41
42
43
44
61
62
63
64
65
66
67
68
69
70
71
73
74
75
76
77
78
79

FIG. 2

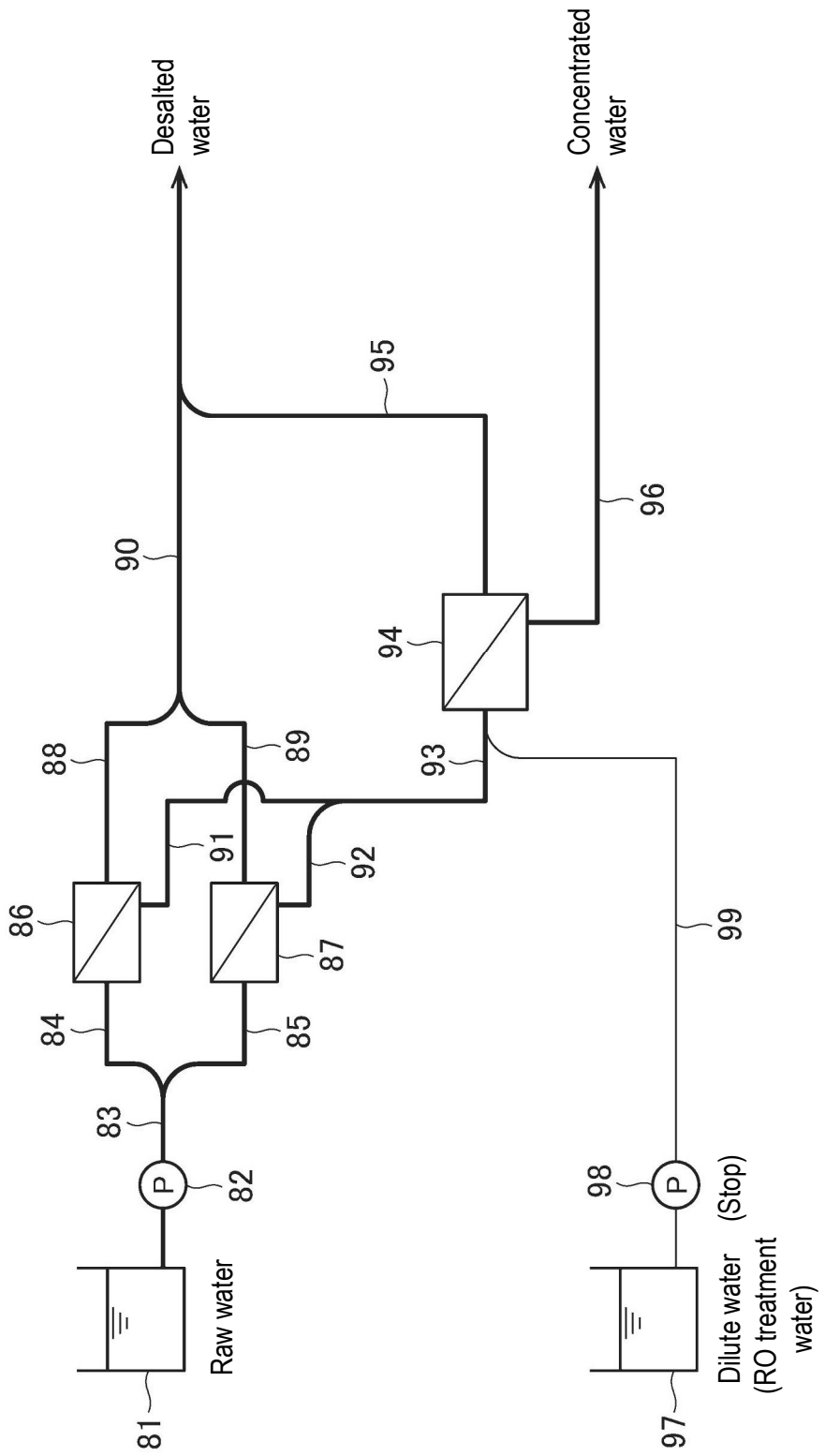
Desalted water
Concentrated water
Raw water
Dilute water (Stop)
(RO treatment water)
P
P
81
82
83
84
85
86
87
88
89
90
91
92
93
94
95
96
97
98
99

FIG. 3

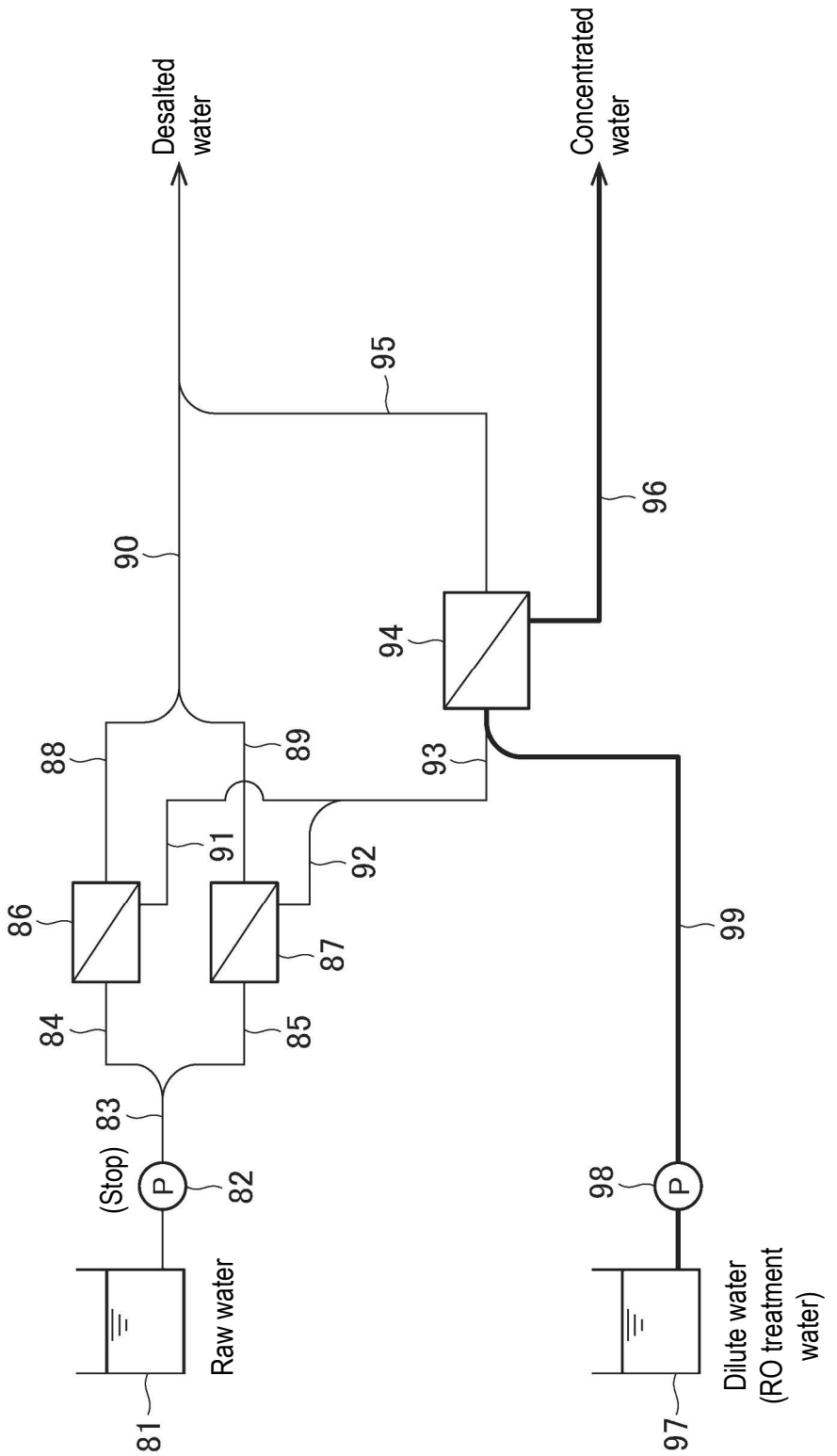
Desalted water
Concentrated water
Raw water
(Stop)
P
Dilute water (RO treatment water)
81
82
83
84
85
86
87
88
89
90
91
92
93
94
95
96
97
98
99

FIG. 4

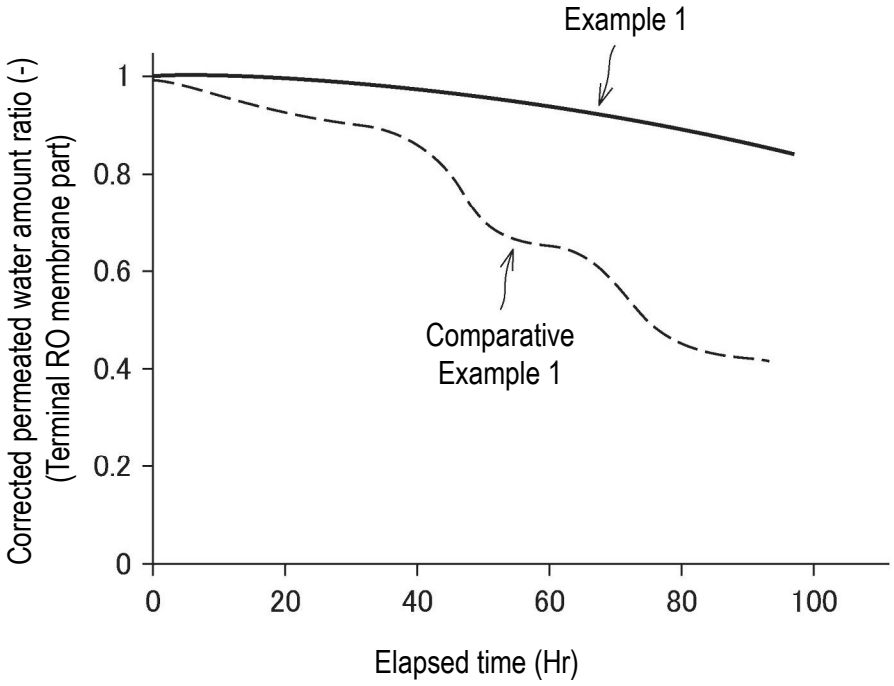
Example 1
Comparative Example 1
Corrected permeated water amount ratio (-)
(Terminal RO membrane part)
1
0.8
0.6
0.4
0.2
0
0
20
40
60
80
100
Elapsed time (Hr)

FIG. 5