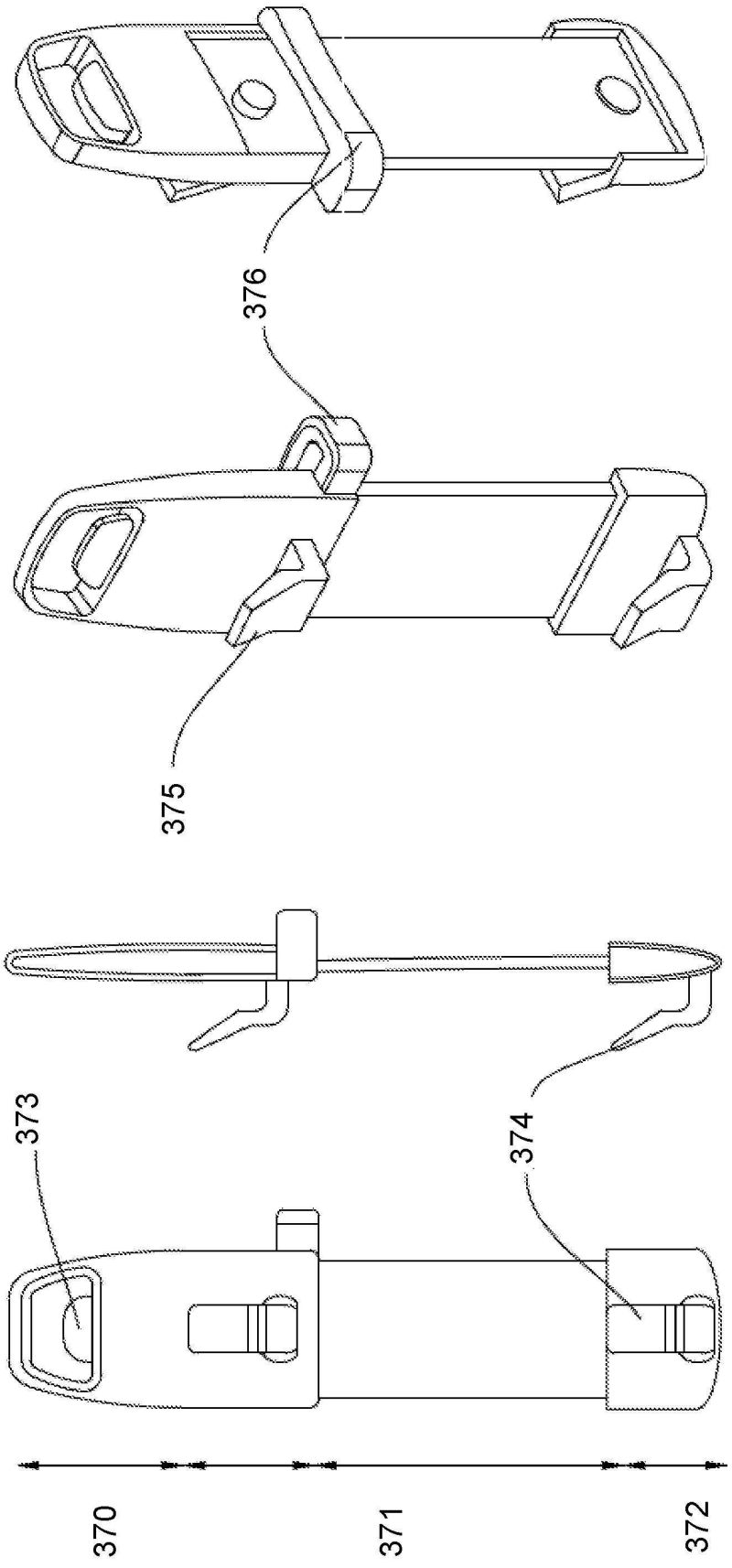

FIGURE 38