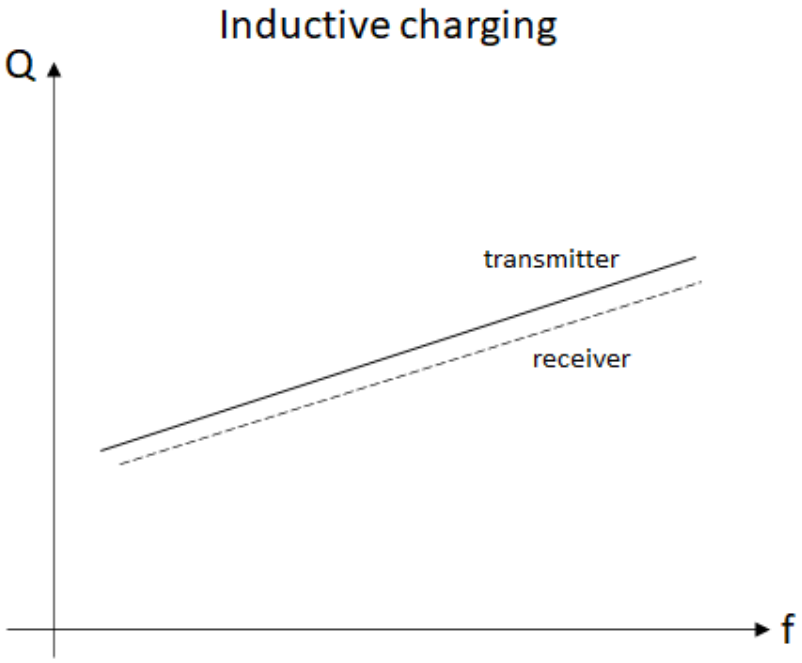
Inductive charging
Q
transmitter
receiver
f

Fig. 1

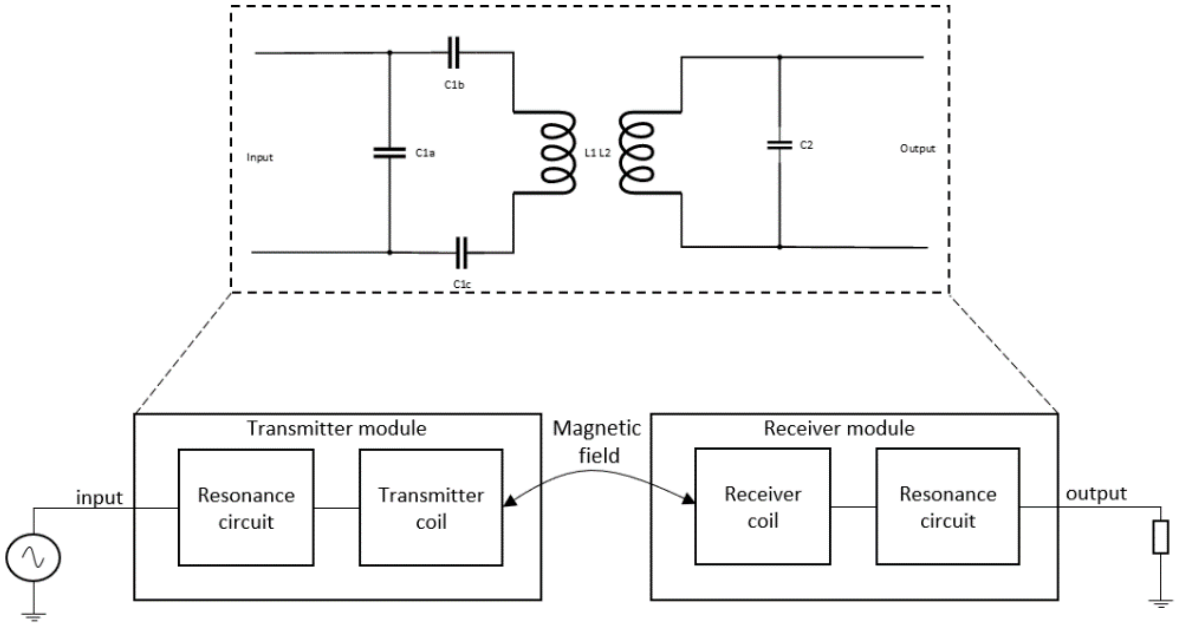
C1b
Input
C1a
L1 L2
C2
Output
C1c
Transmitter module
Magnetic field
Receiver module
input
Resonance circuit
Transmitter coil
Receiver coil
Resonance circuit
output

Fig. 2

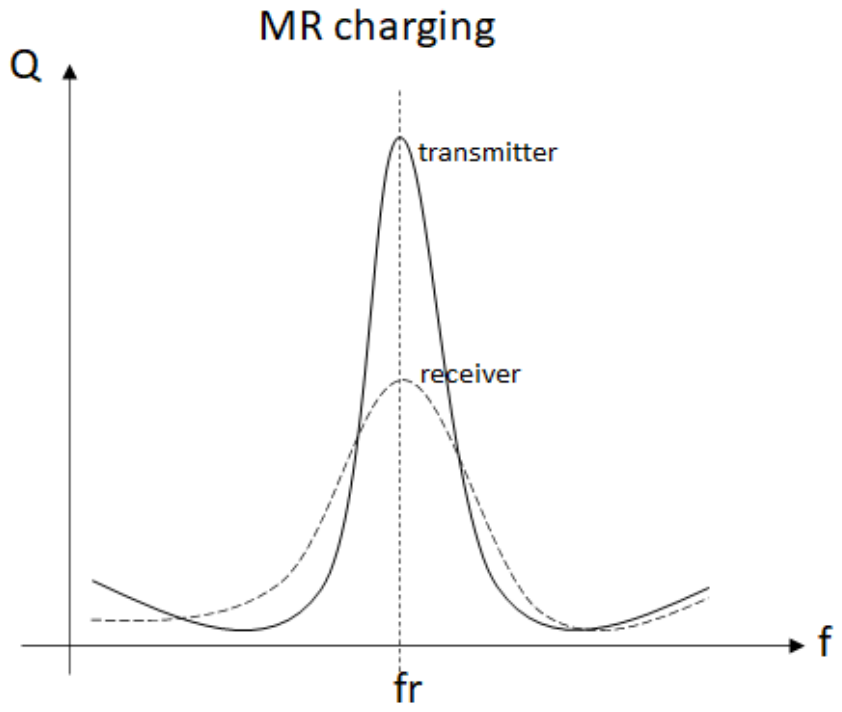

Fig. 3

Transmitter module with series resonance circuit	Transmitter module with parallel resonance circuit
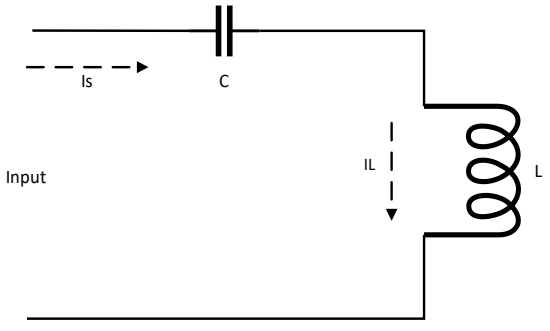	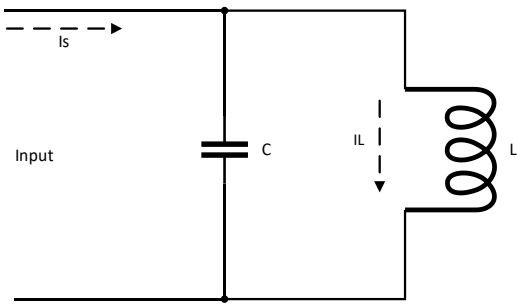

Fig. 4

Receiver module in Series resonance circuit	Receiver module in Parallel resonance circuit
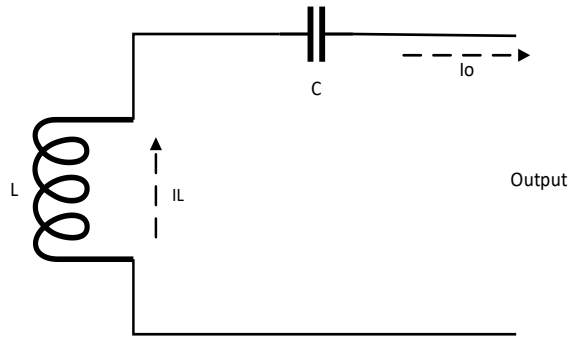	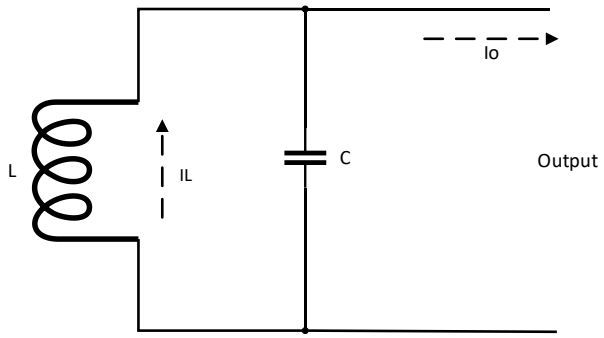

Fig. 5

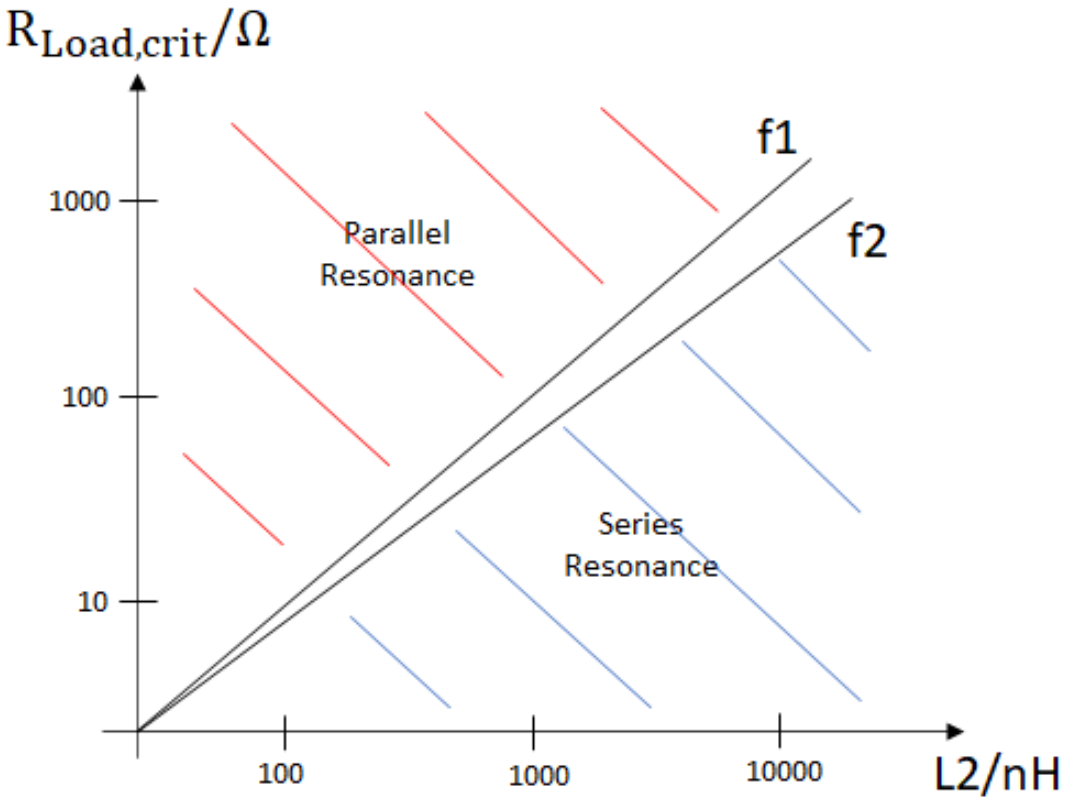

Fig. 6

Rectifier circuit of Series resonance circuit	Rectifier circuit of Parallel resonance circuit
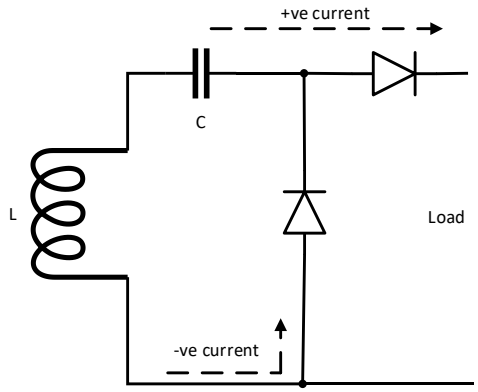	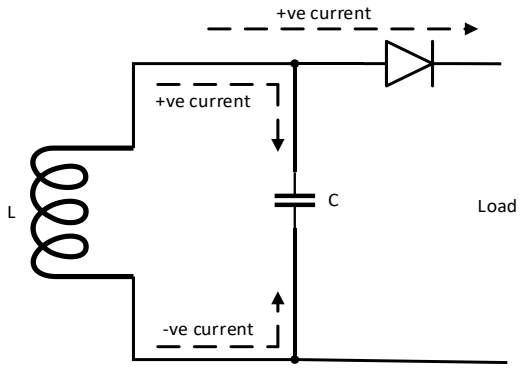

Fig. 7

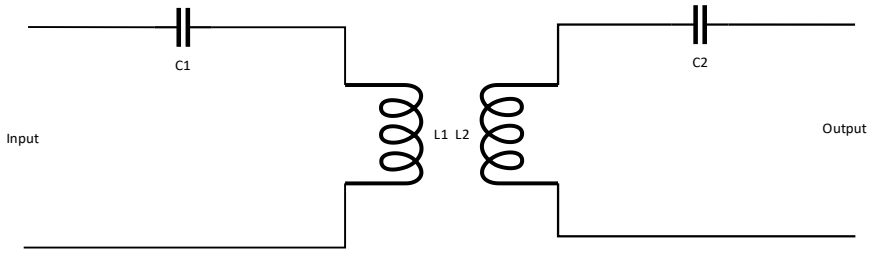

Series-series

Fig. 8

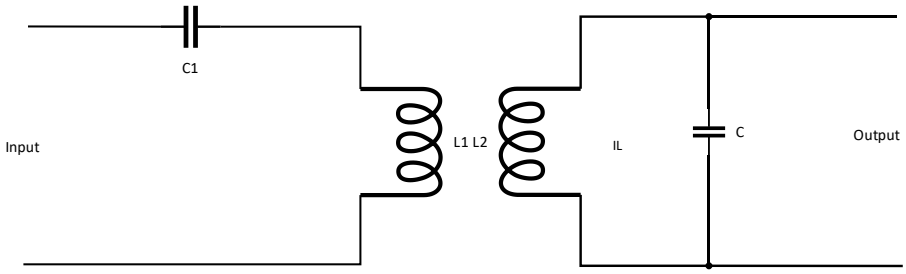

Series-parallel

Fig. 9

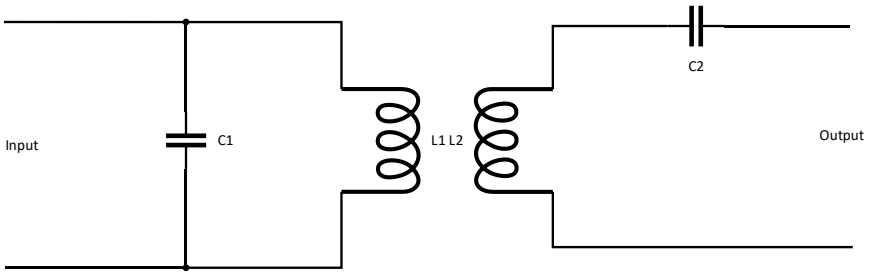

Parallel-Series

Fig. 10

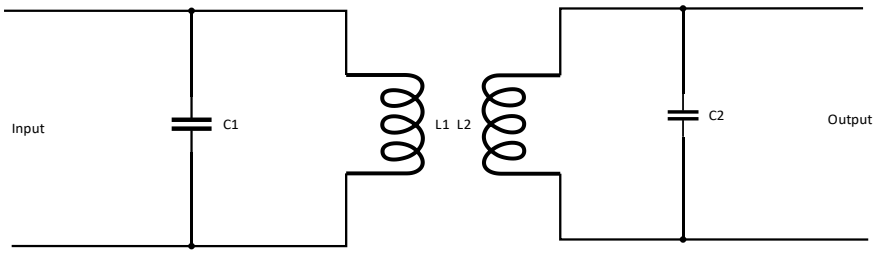

Parallel-parallel

Fig. 11

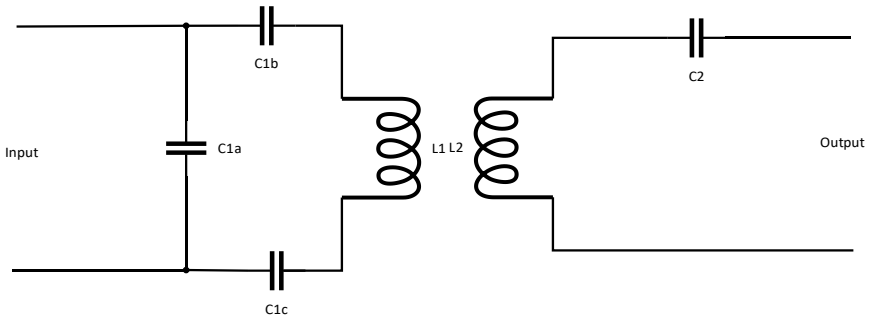

Parallel series-series

Fig. 12

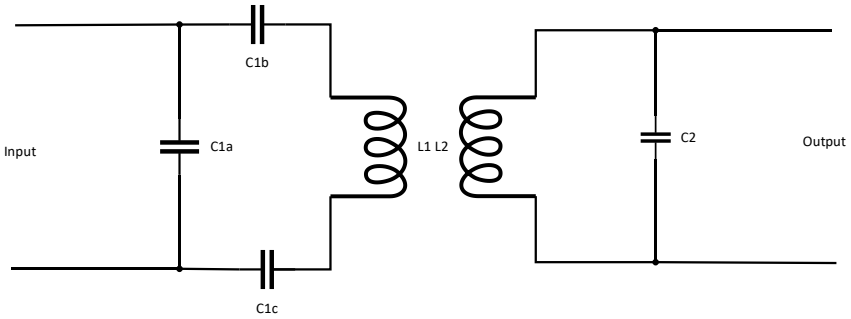

Parallel series-parallel

Fig. 13



Fig. 14



Fig. 15

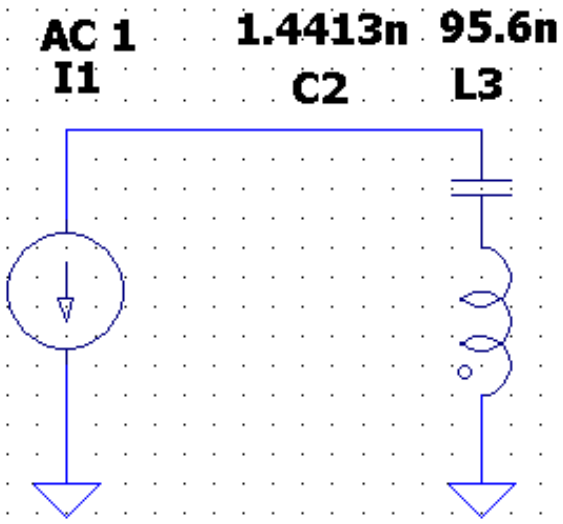

Fig. 16a

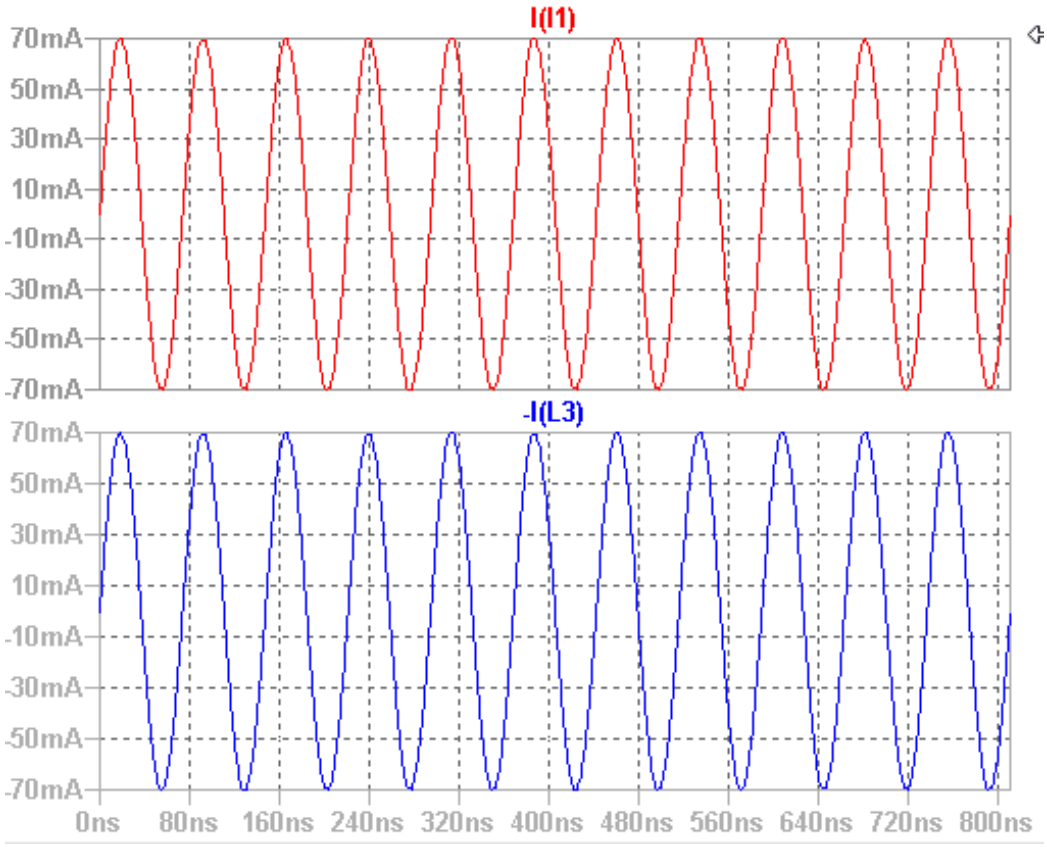

Fig. 16b

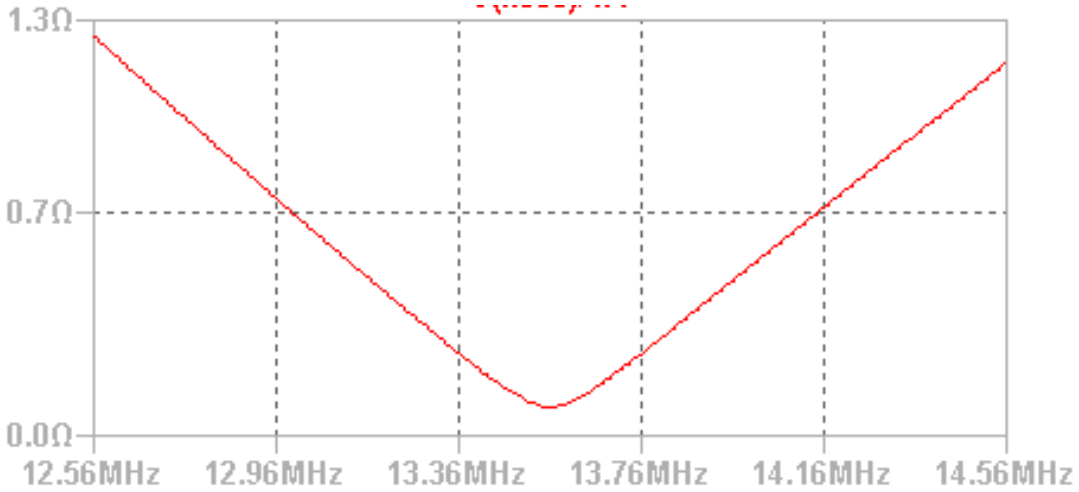

Fig. 17

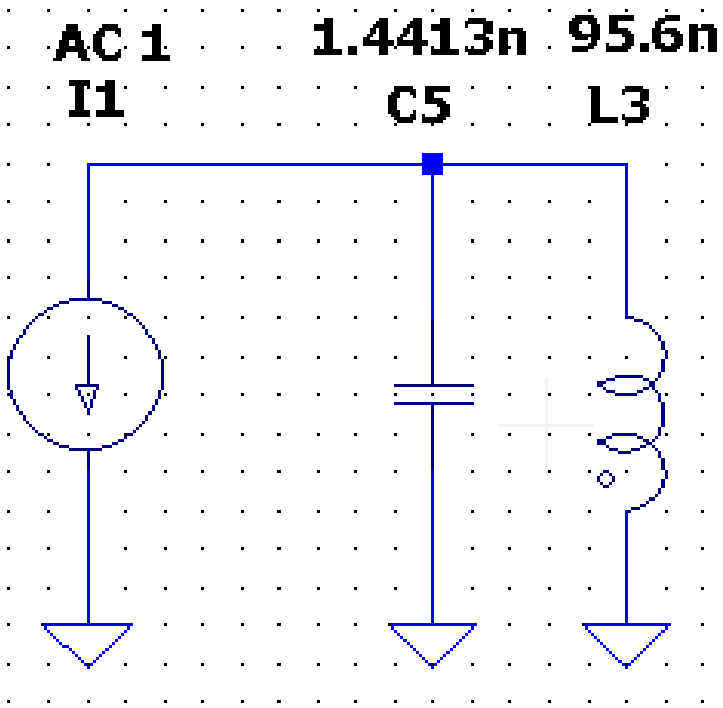

Fig. 18a

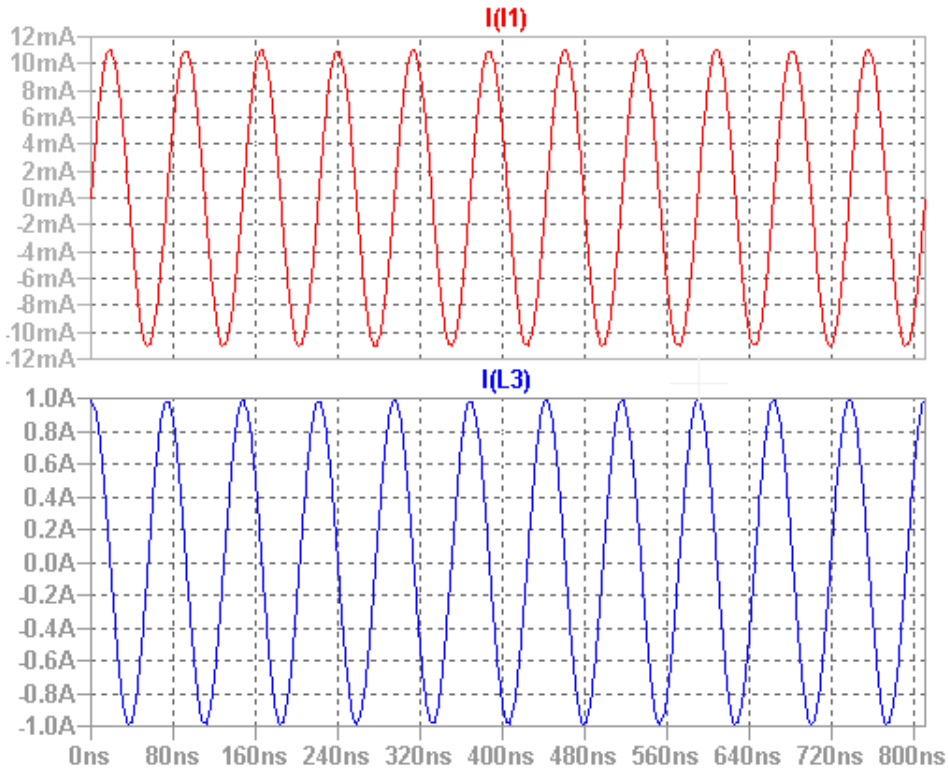

Fig. 18b

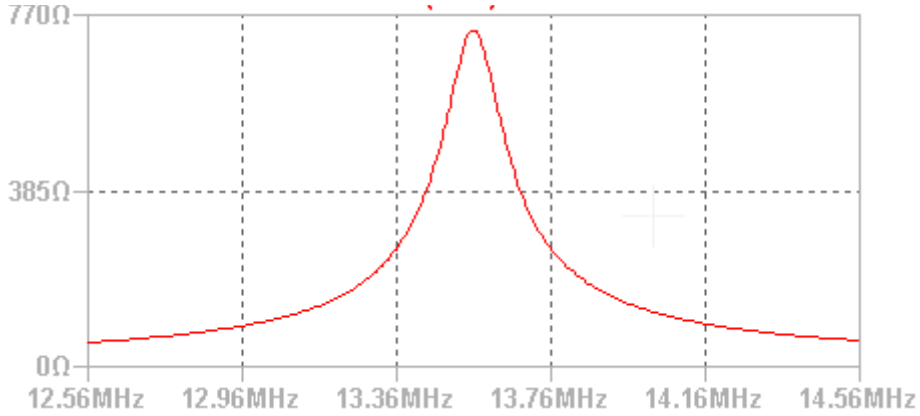

Fig. 19

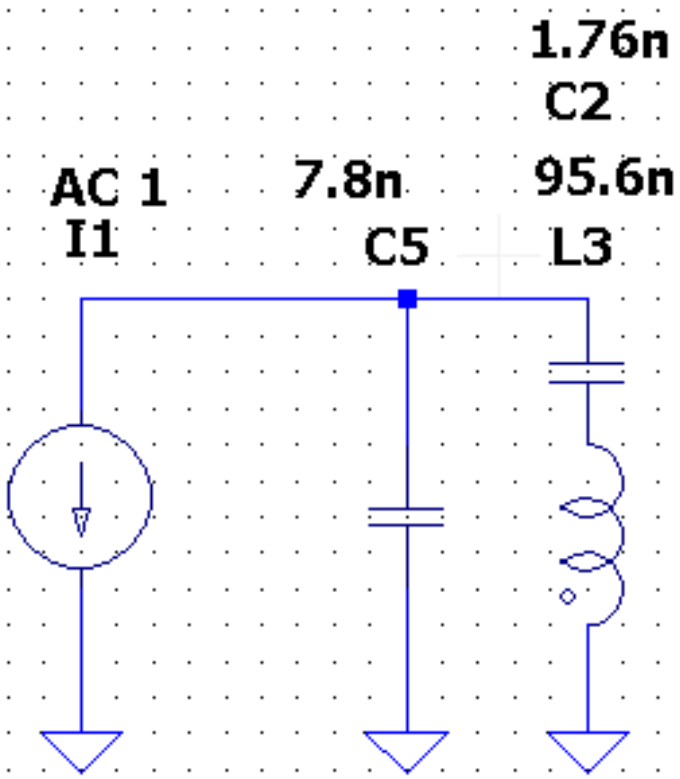

Fig. 20a

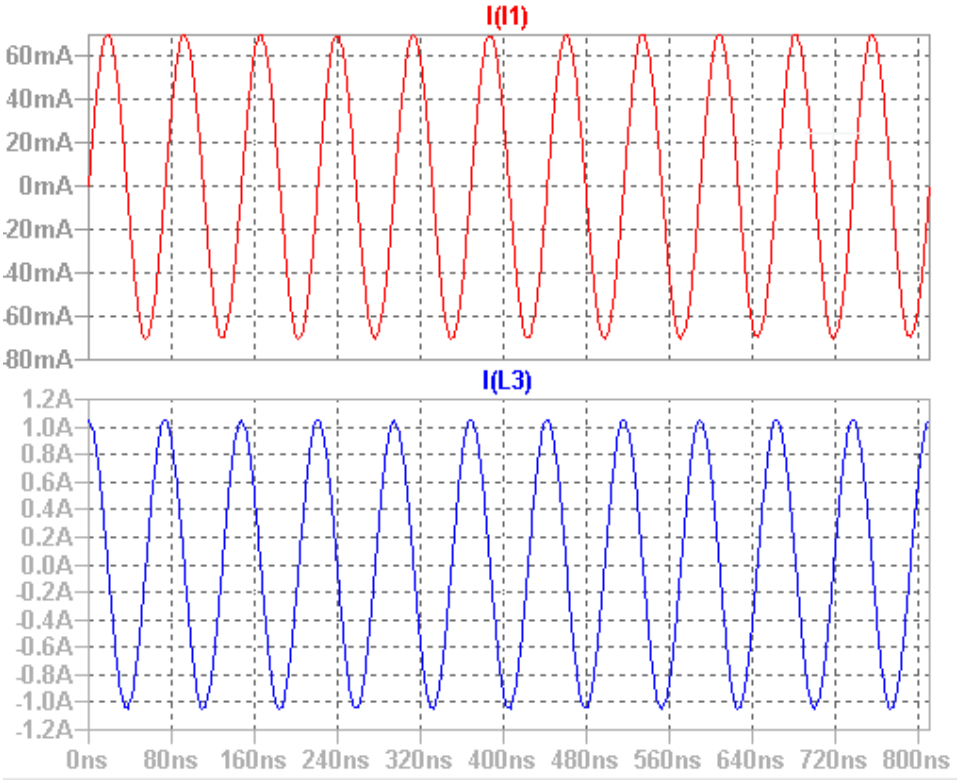

Fig. 20b

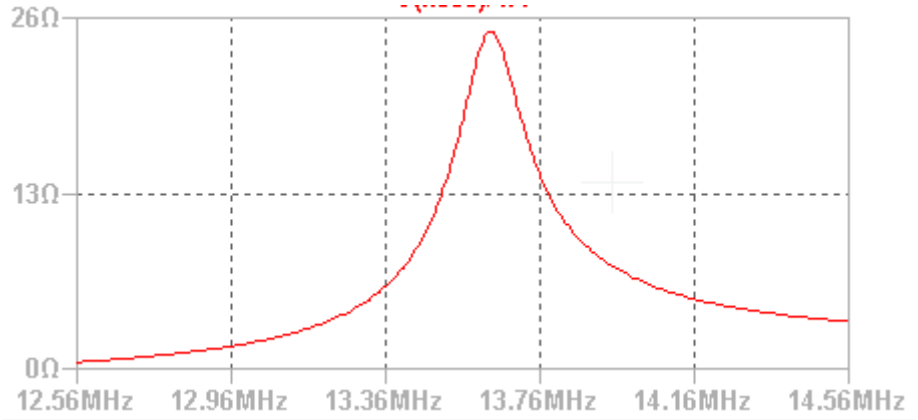

Fig. 21

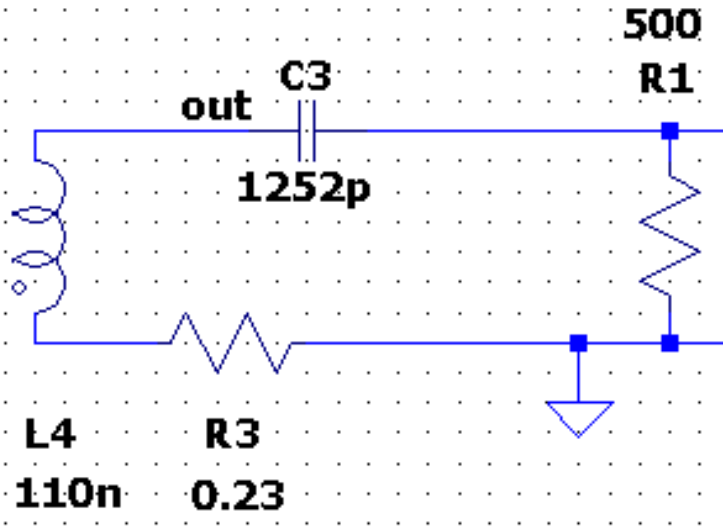

Fig. 22a

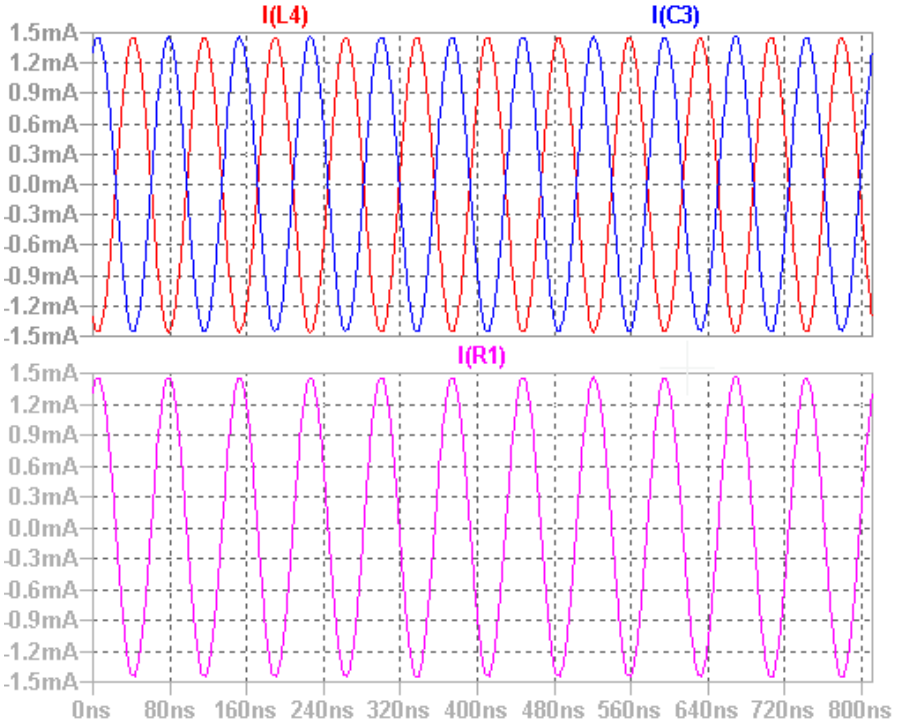

Fig. 22b

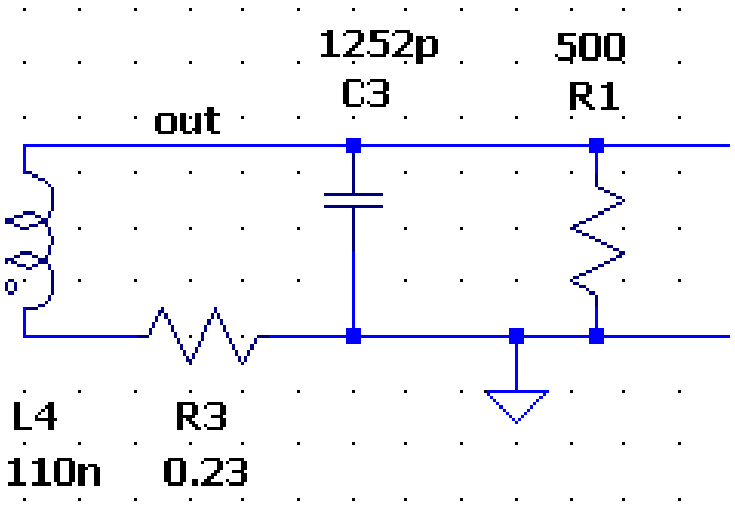

Fig. 23a

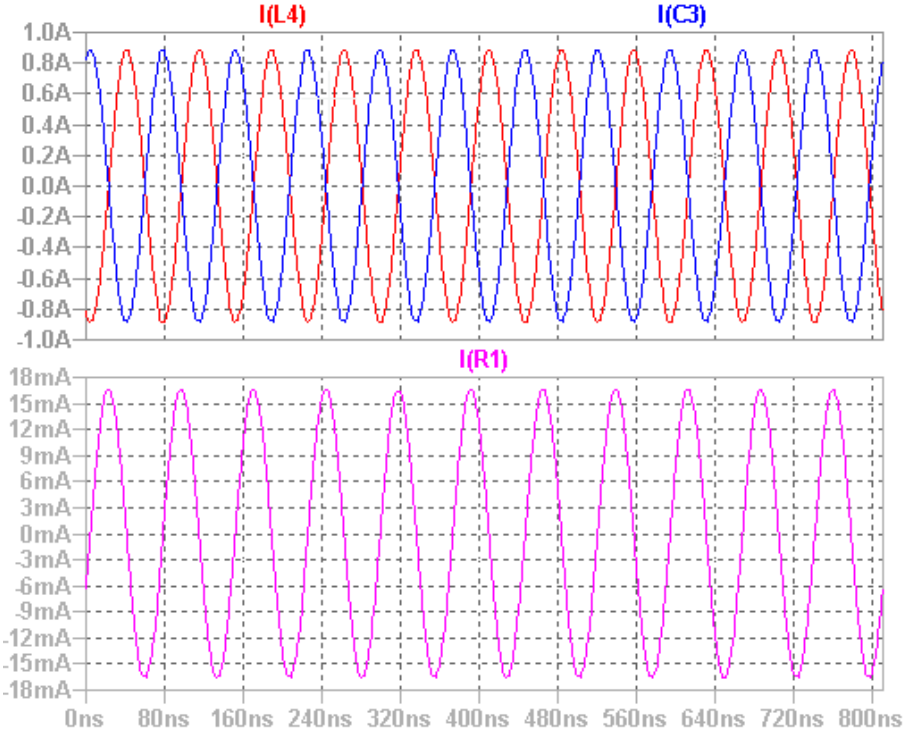

Fig. 23b

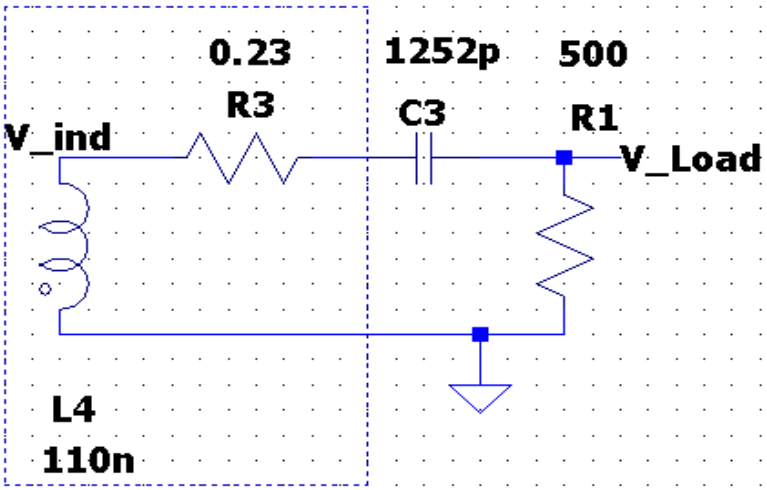

Fig. 24a

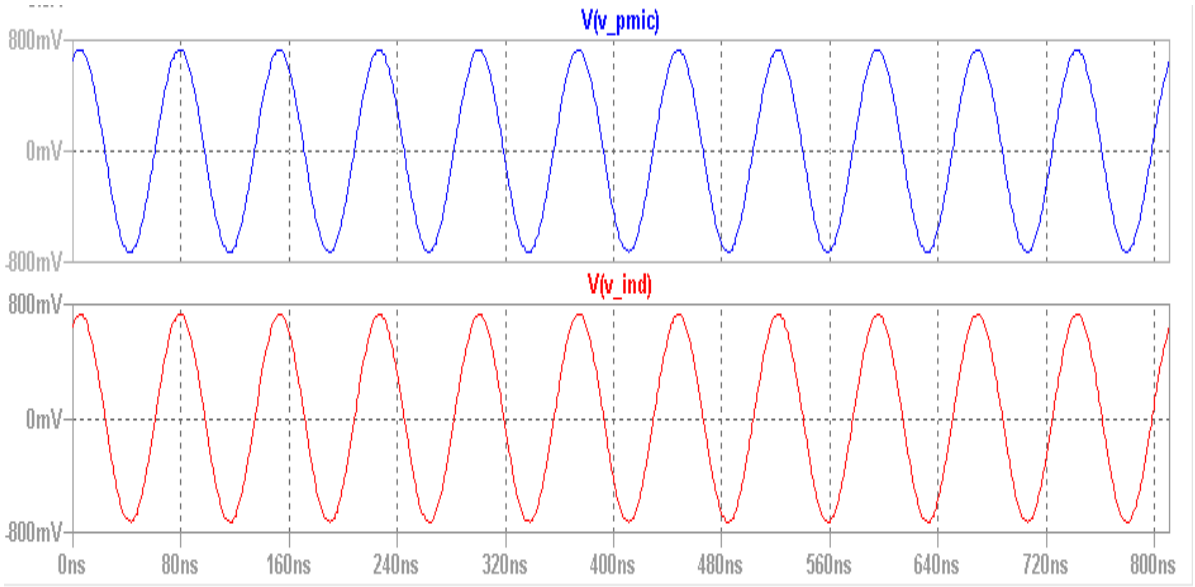

Fig. 24b

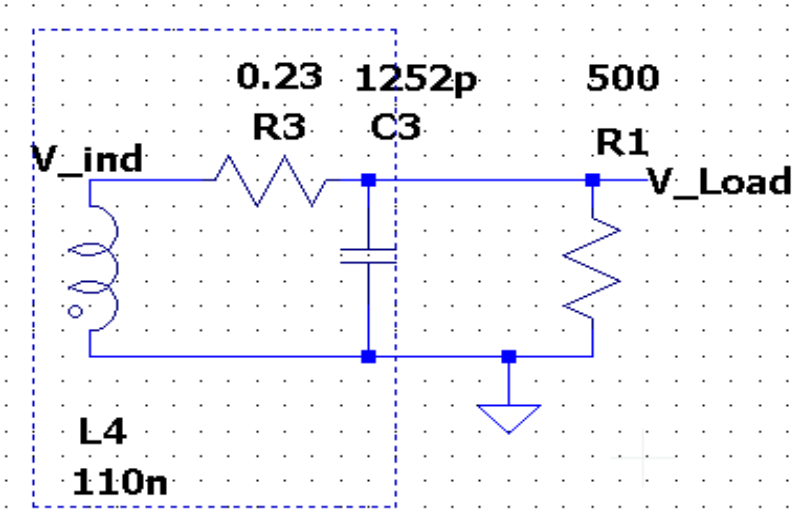

Fig. 25a

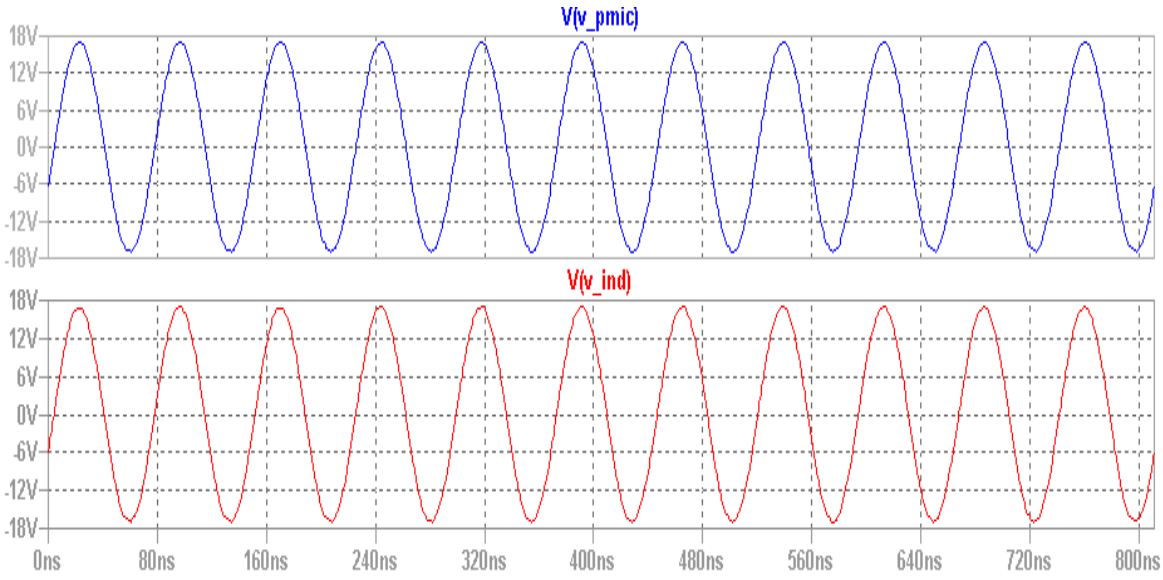

Fig. 25b

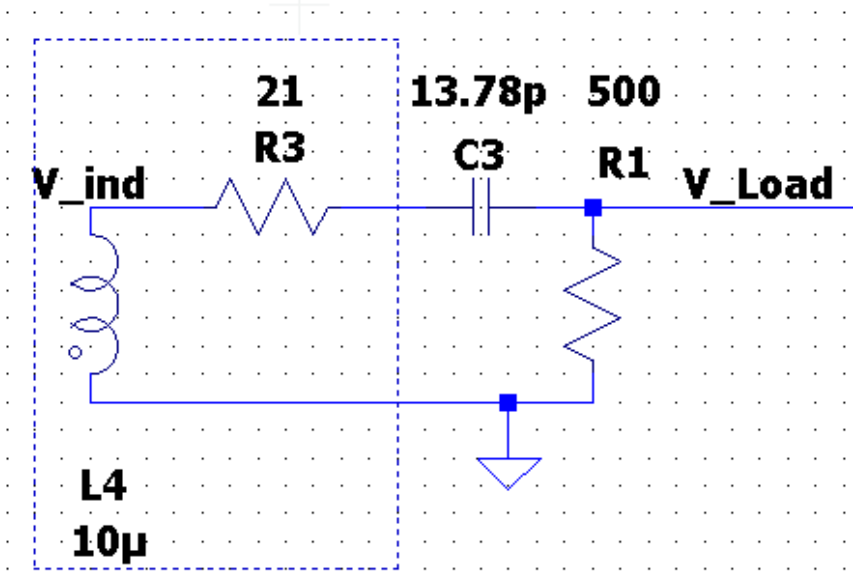

Fig. 26a

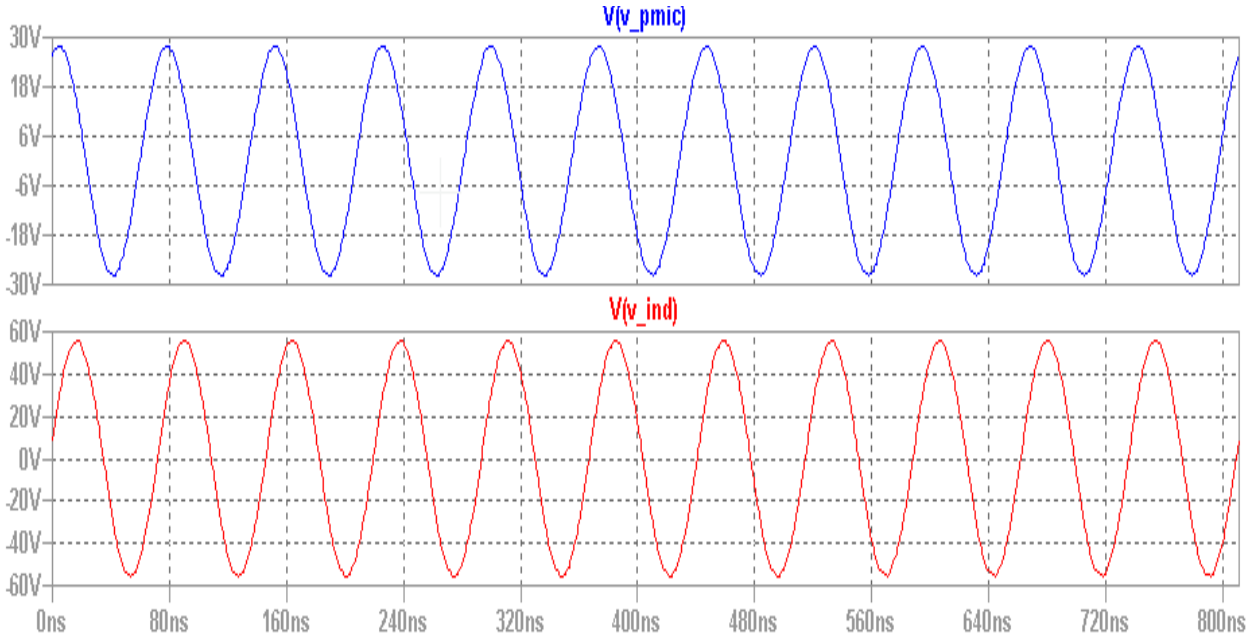

Fig. 26b

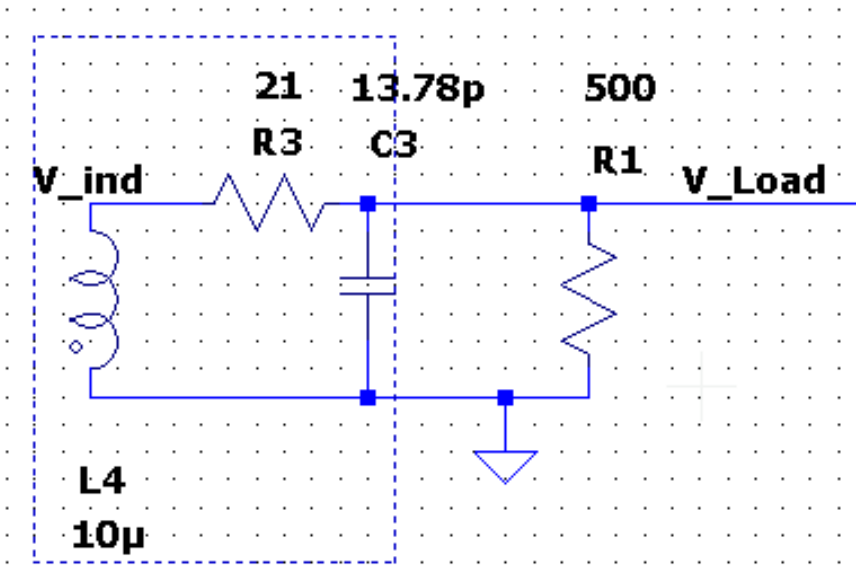

Fig. 27a

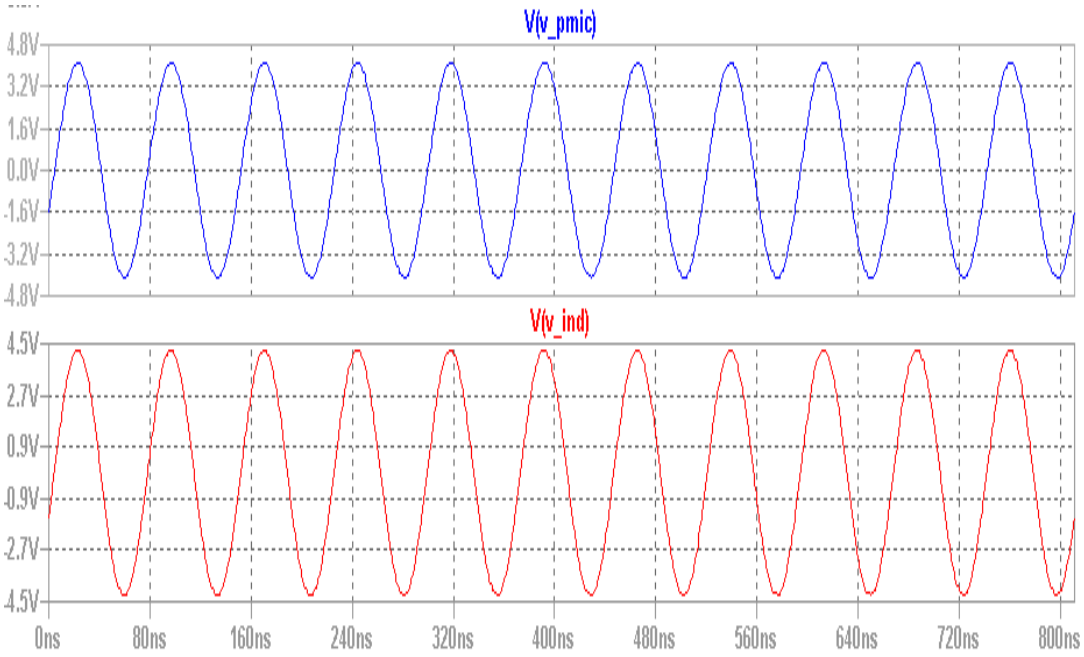

Fig. 27b

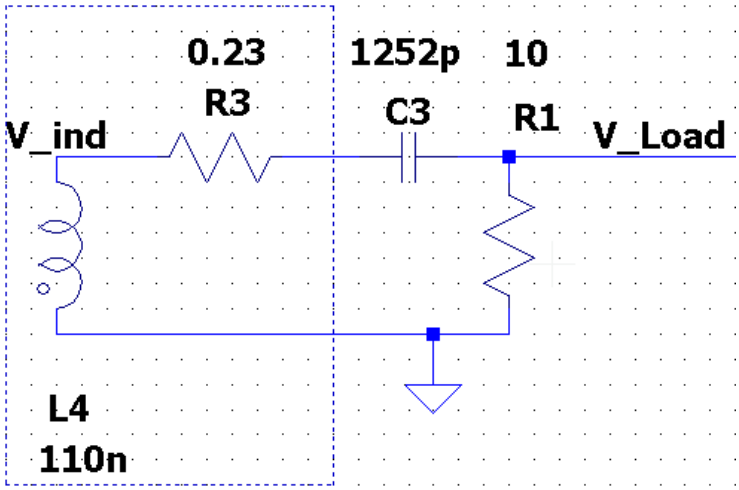

Fig. 28a

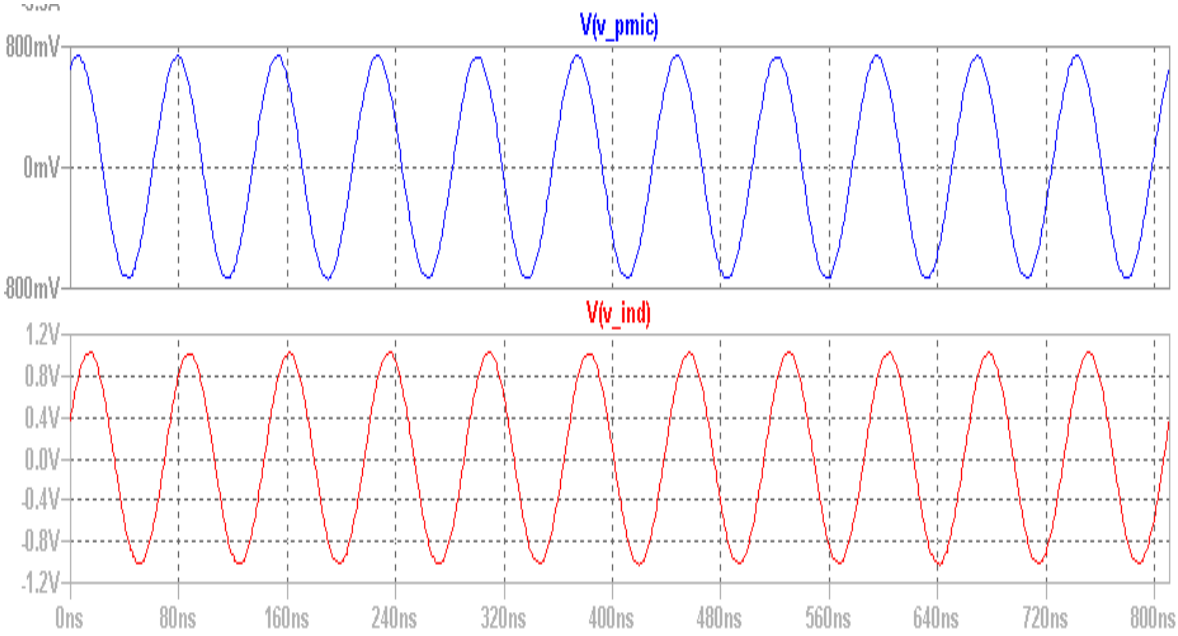

Fig. 28b

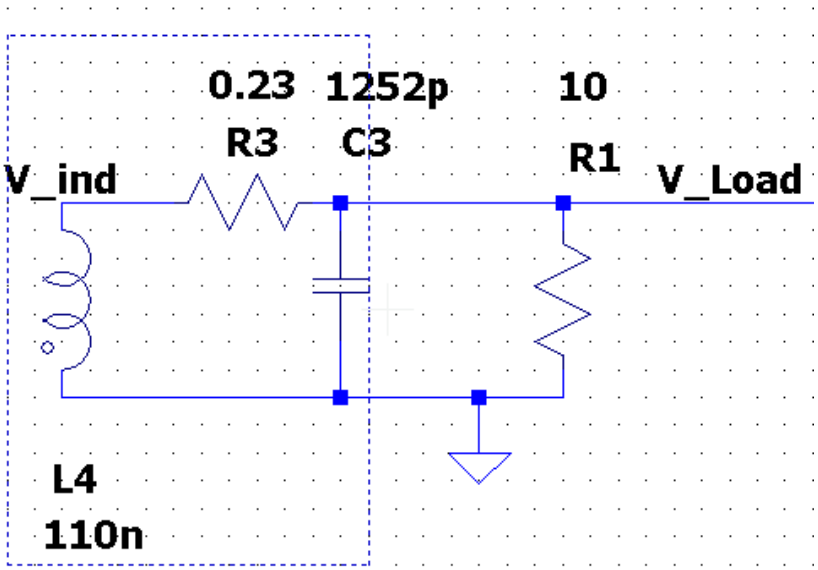

Fig. 29a

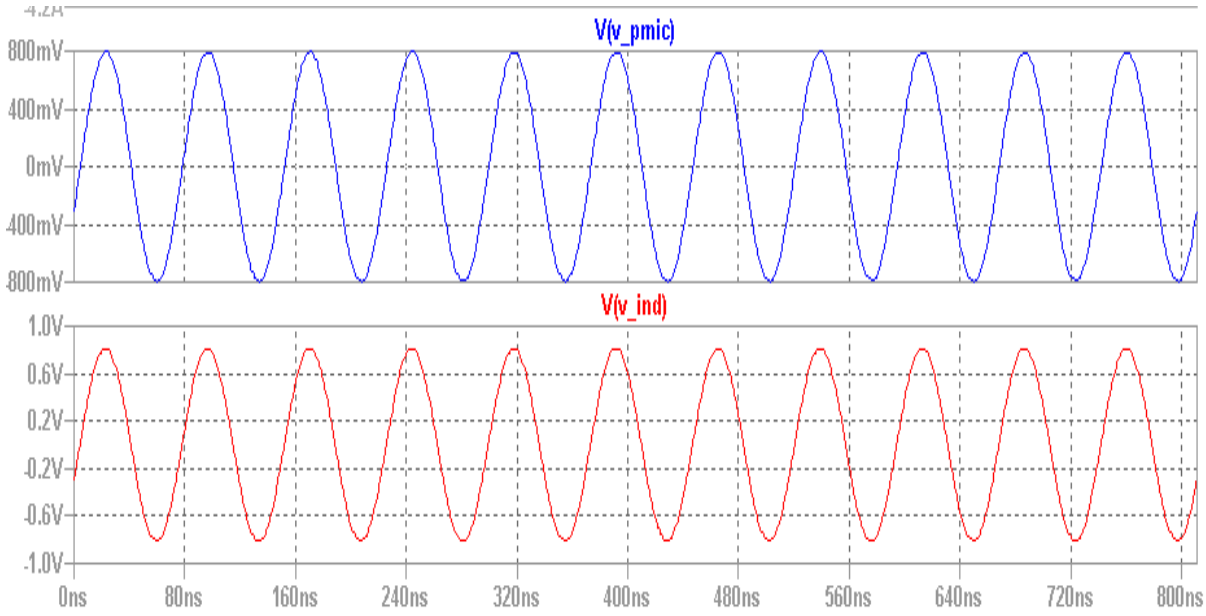

Fig. 29b

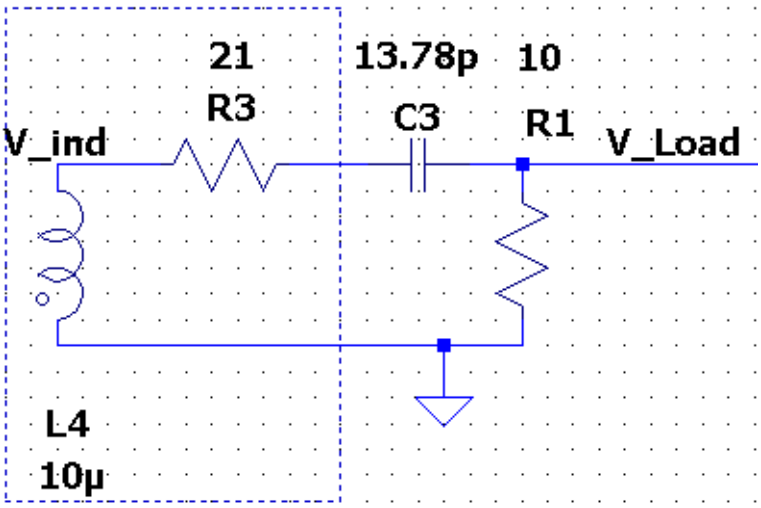

Fig. 30a

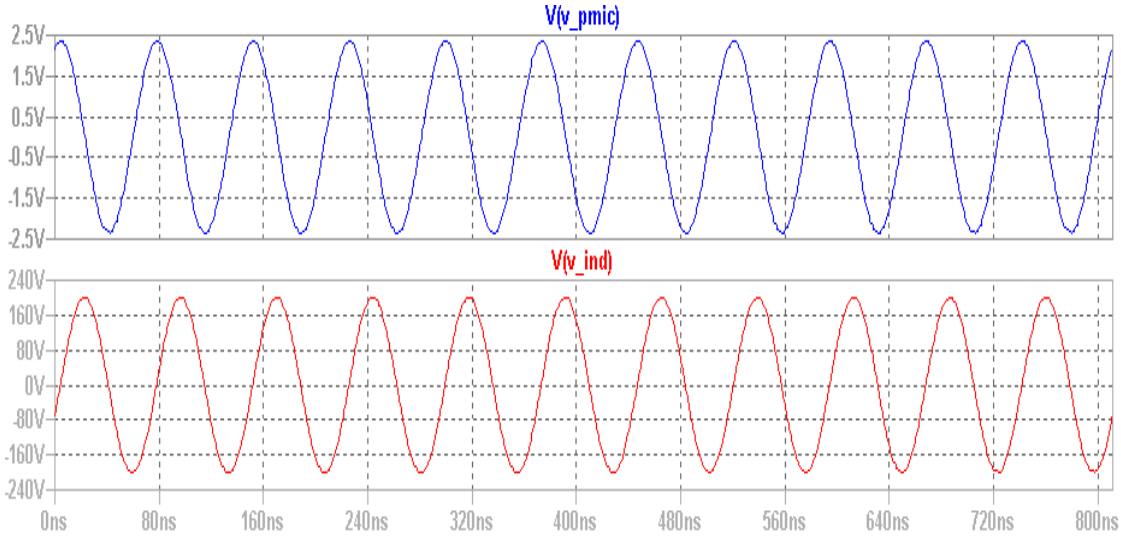

Fig. 30b

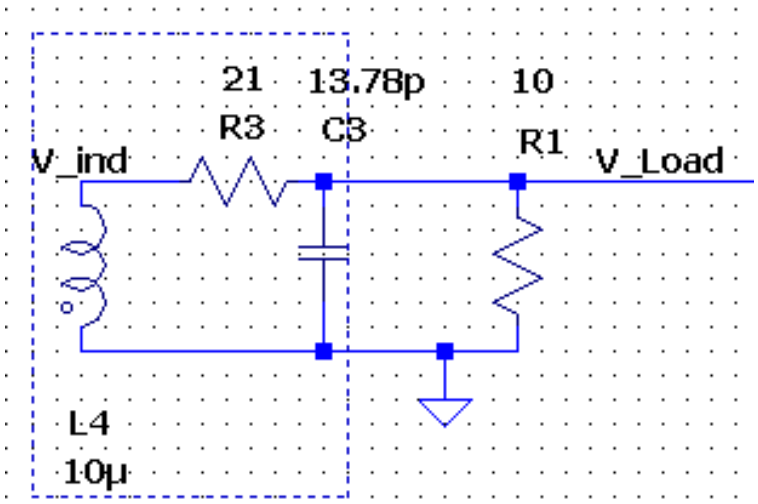

Fig. 31a

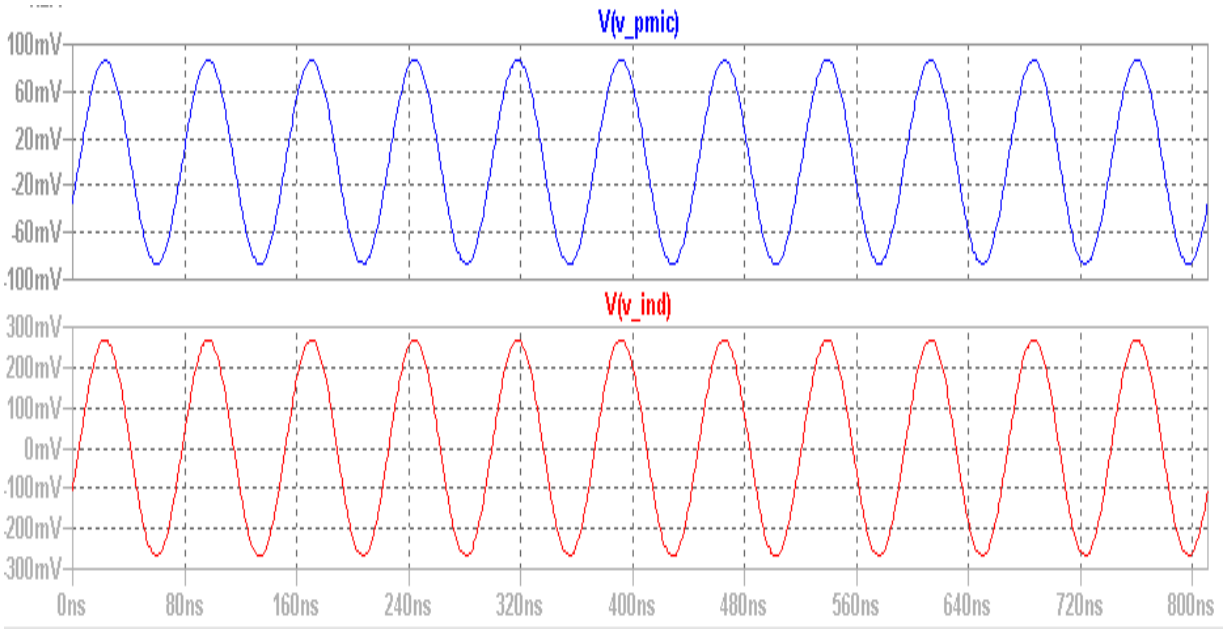

Fig. 31b

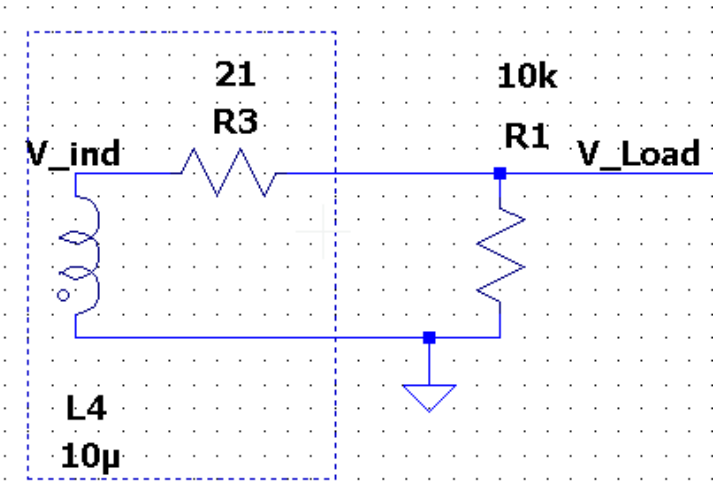

Fig. 32a

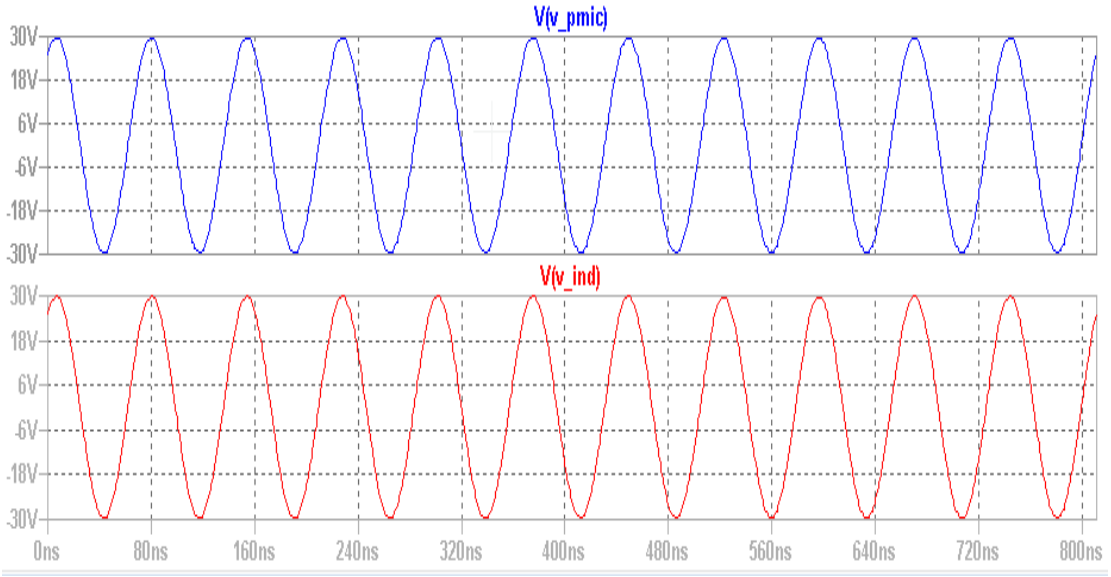

Fig. 32b

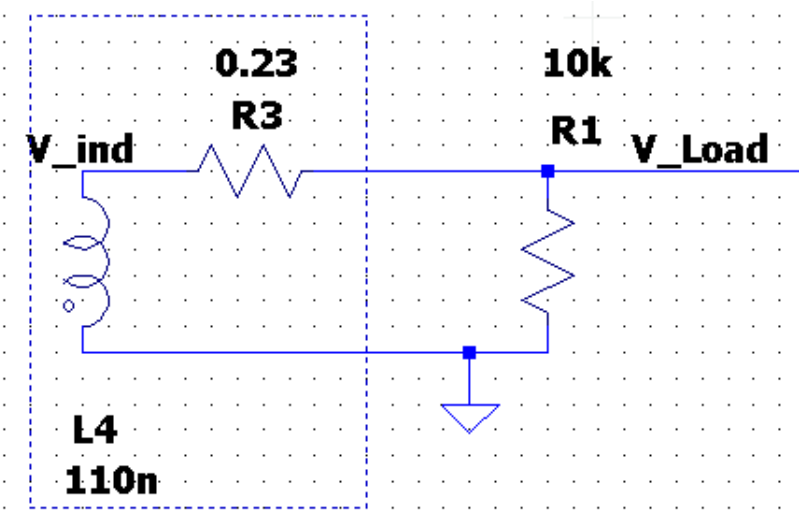

Fig. 33a

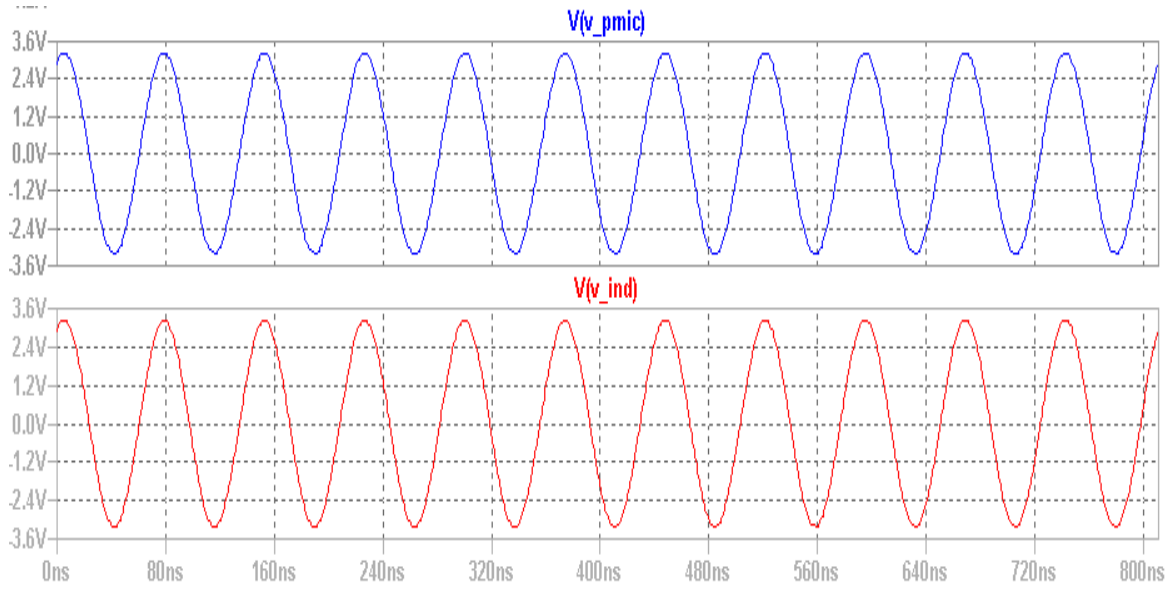

Fig. 33b