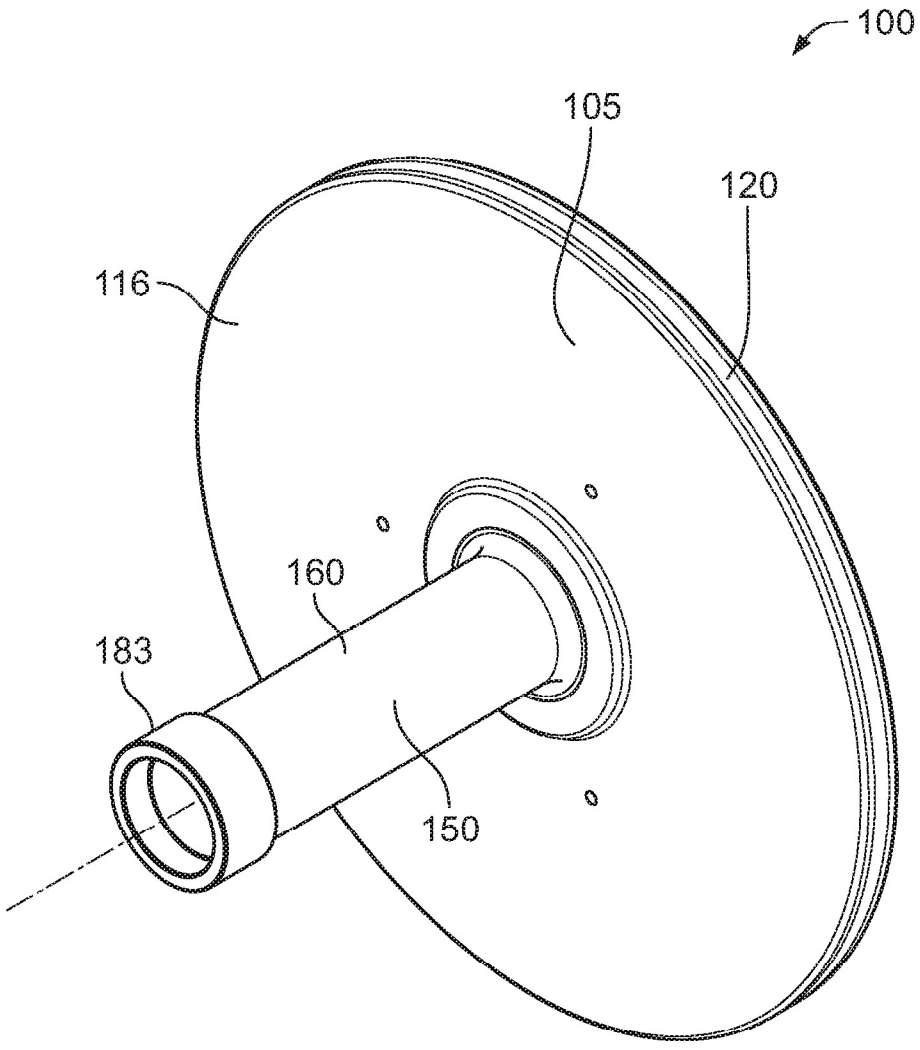

FIG. 1

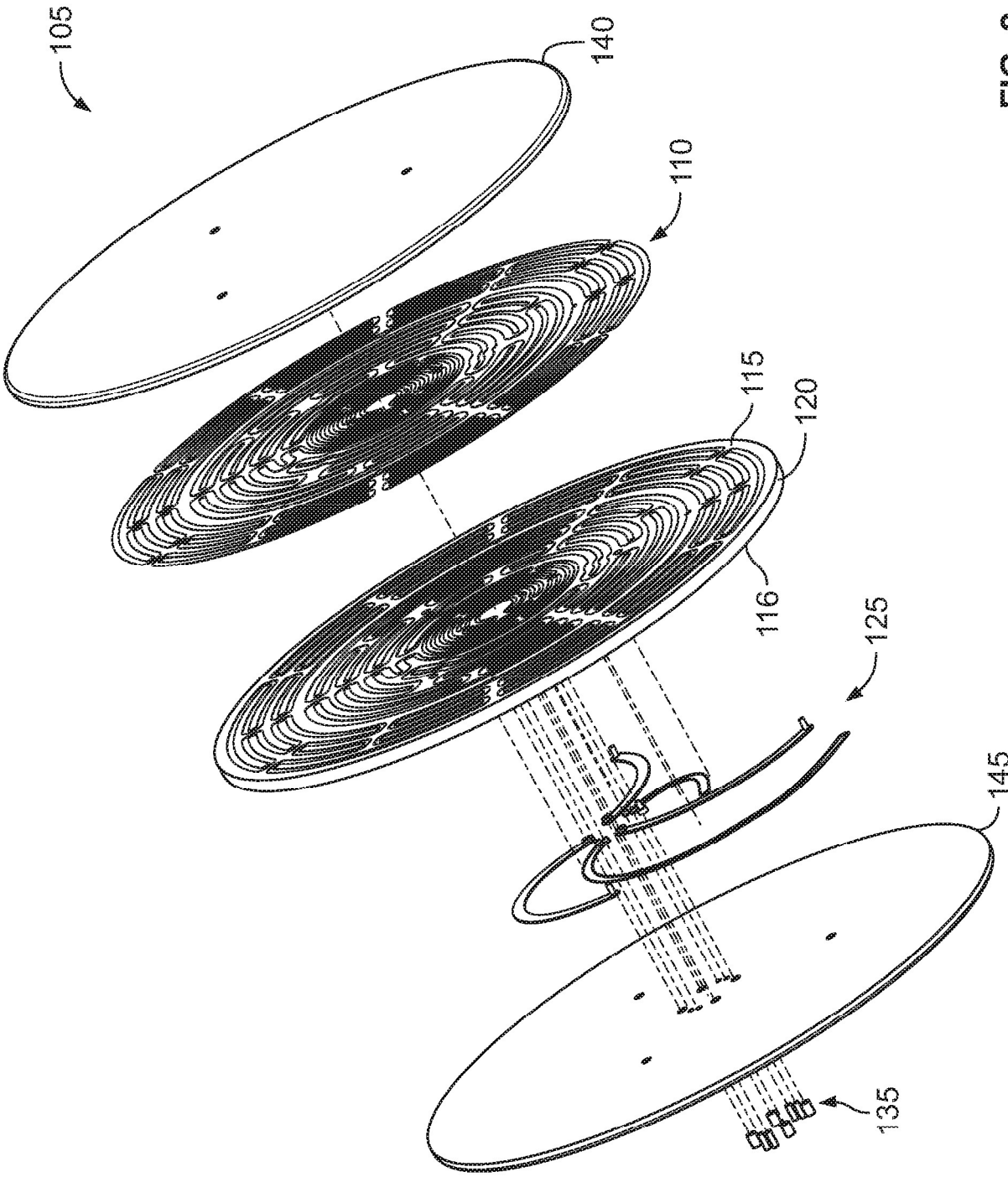

FIG. 2

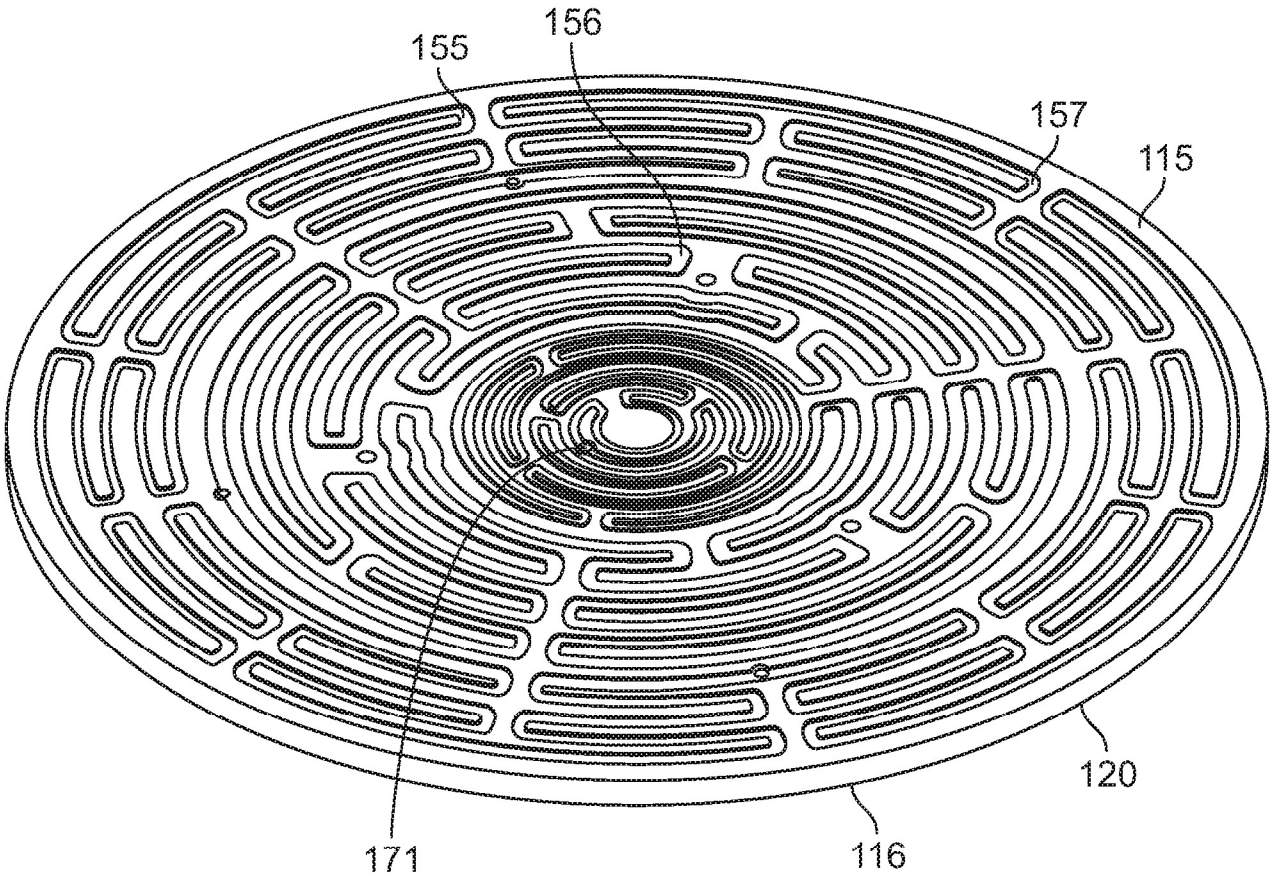

FIG. 3

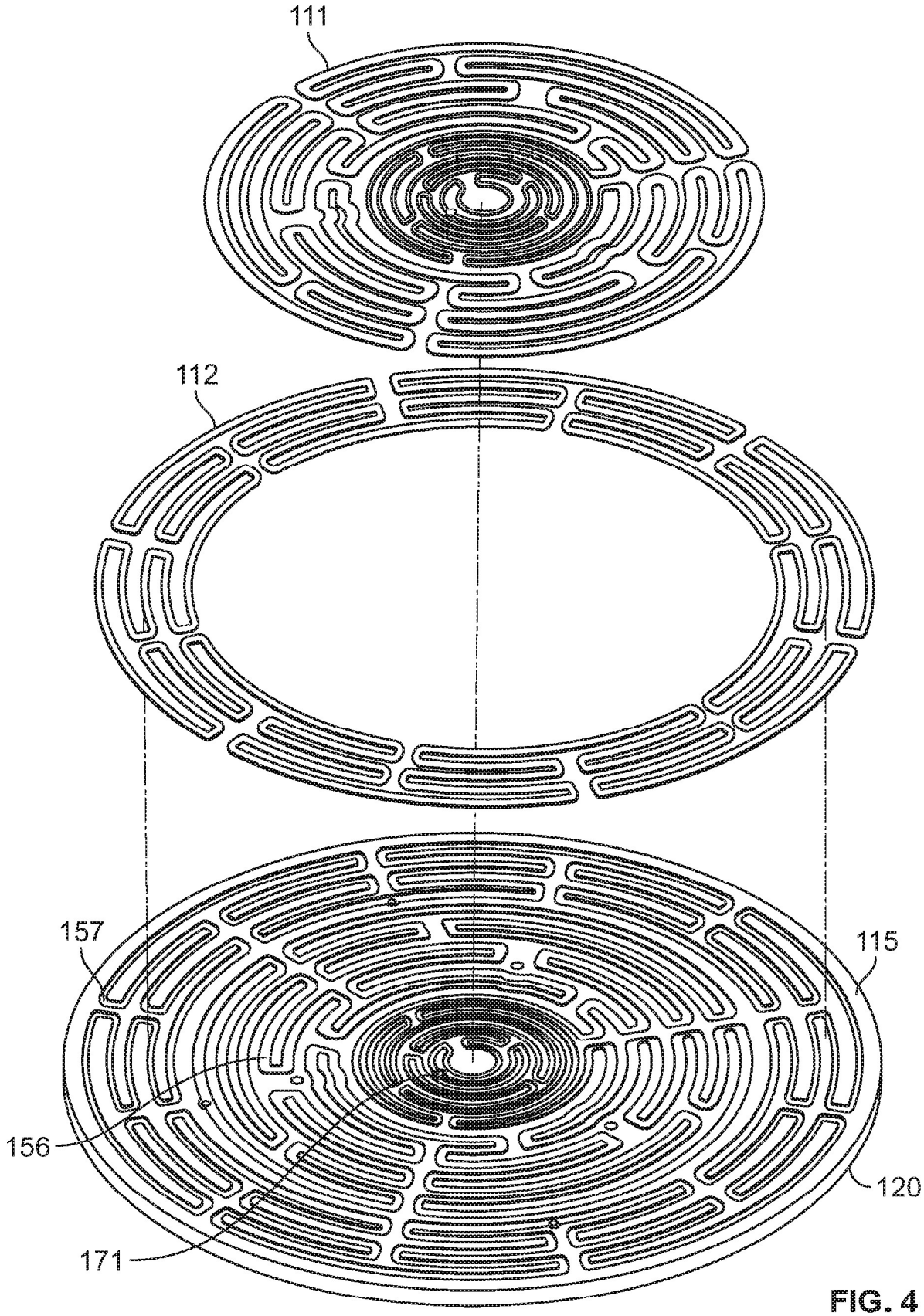

FIG. 4

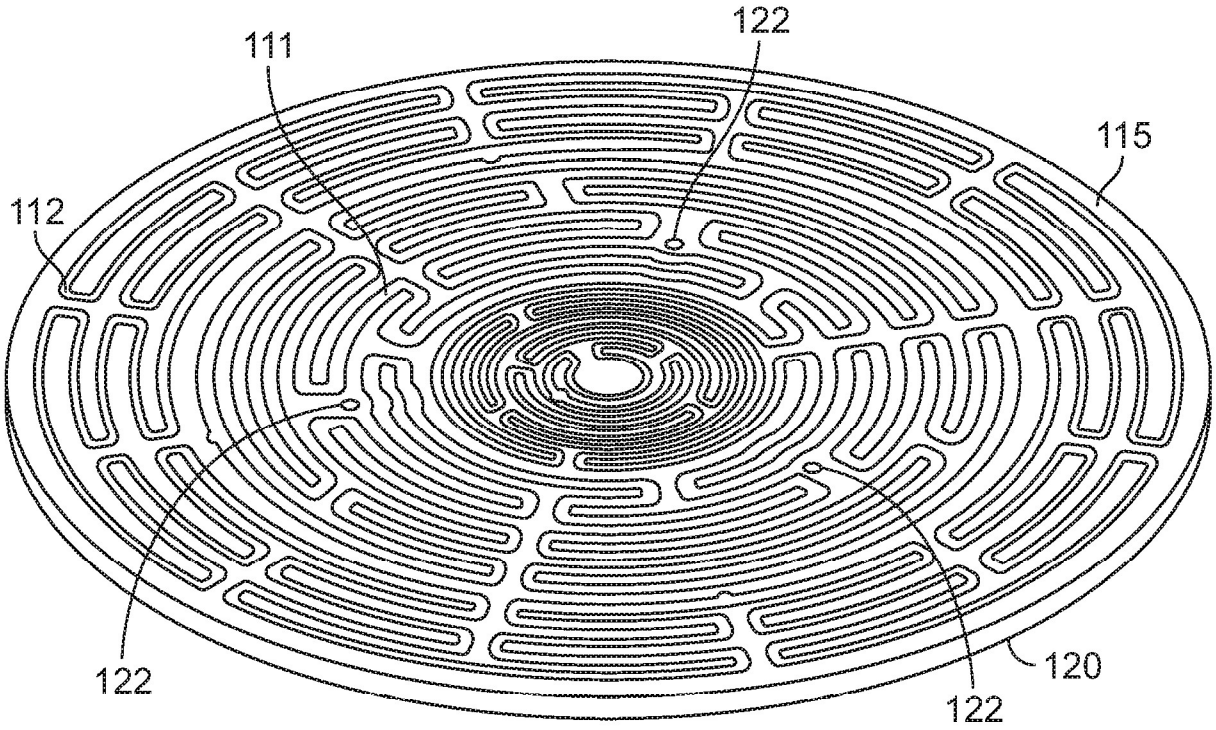

FIG. 5

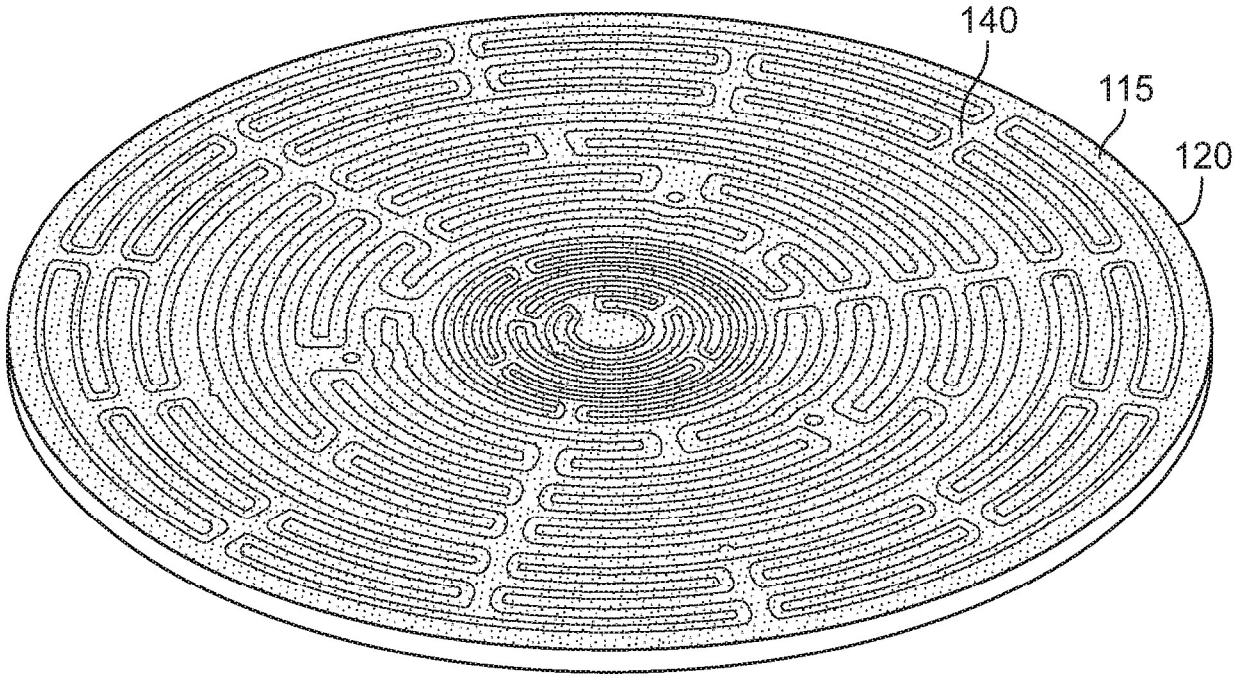

FIG. 6

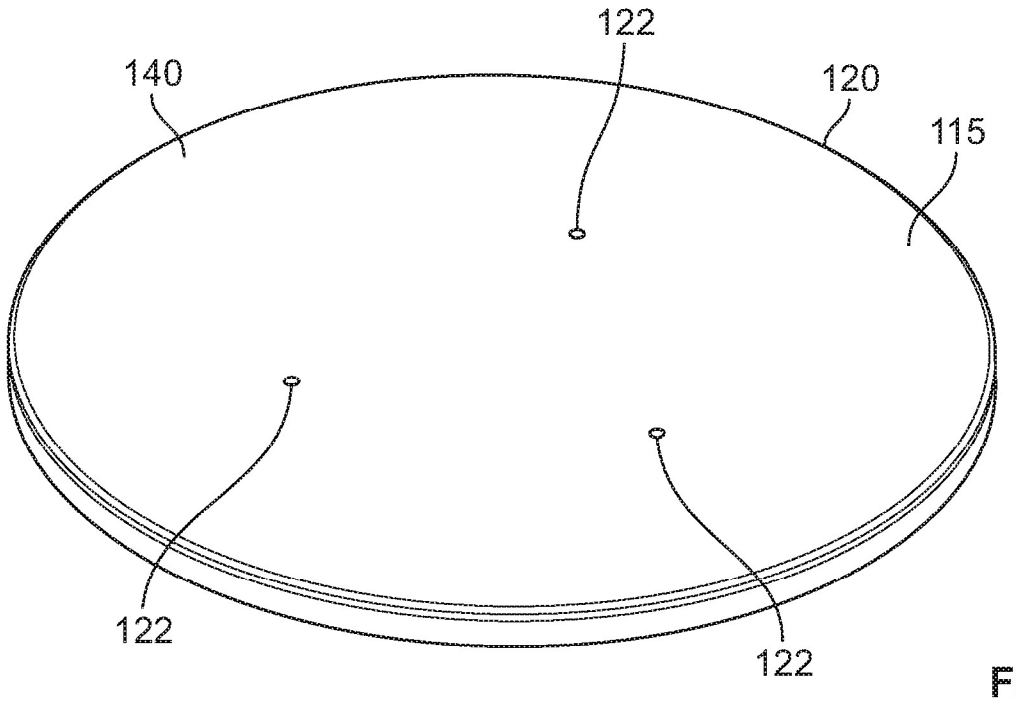
122
140
120
115
122
122

FIG. 7

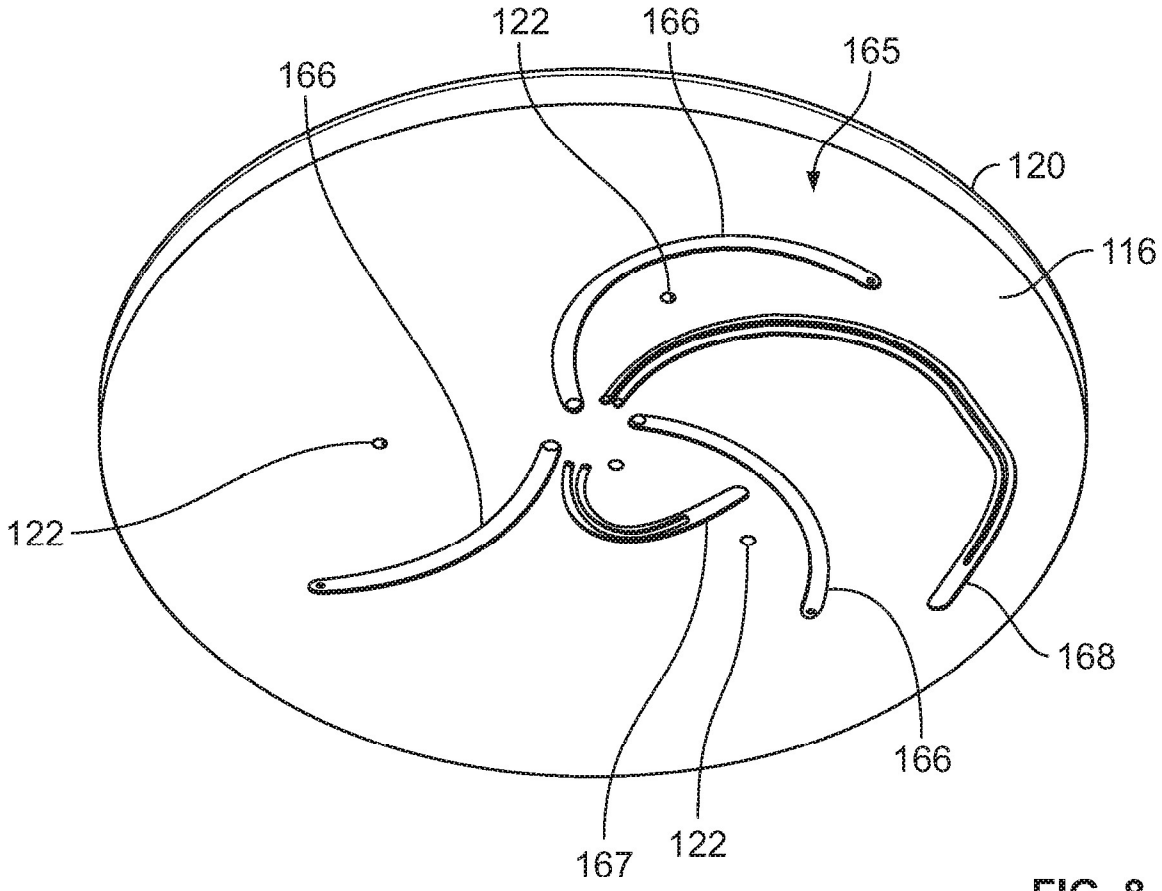
122
166
166
165
120
116
122
168
166
167
122

FIG. 8

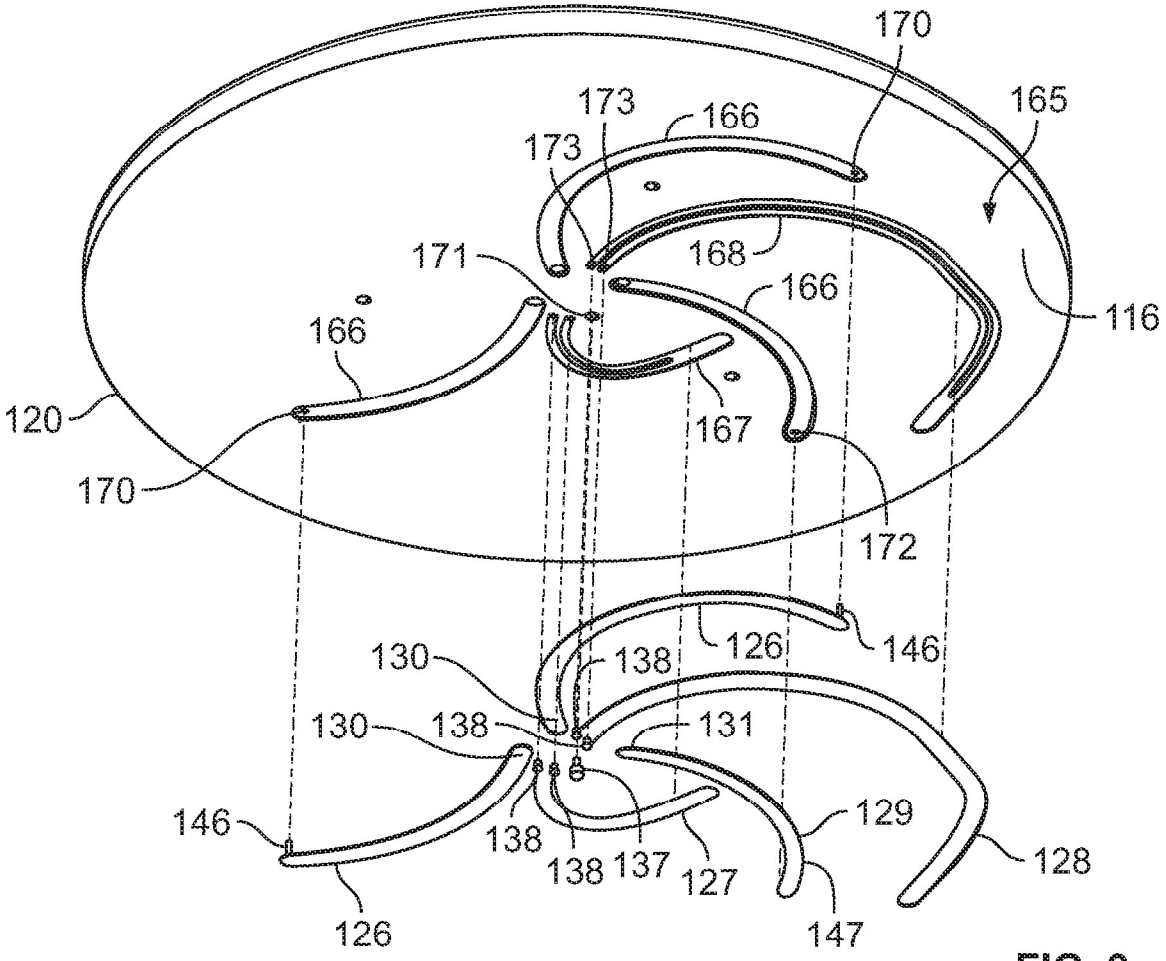
170
165
173
166
173
168
171
166
116
166
120
167
170
172
126
146
130
138
130
138
131
146
129
138
138
137
127
128
126
147

FIG. 9

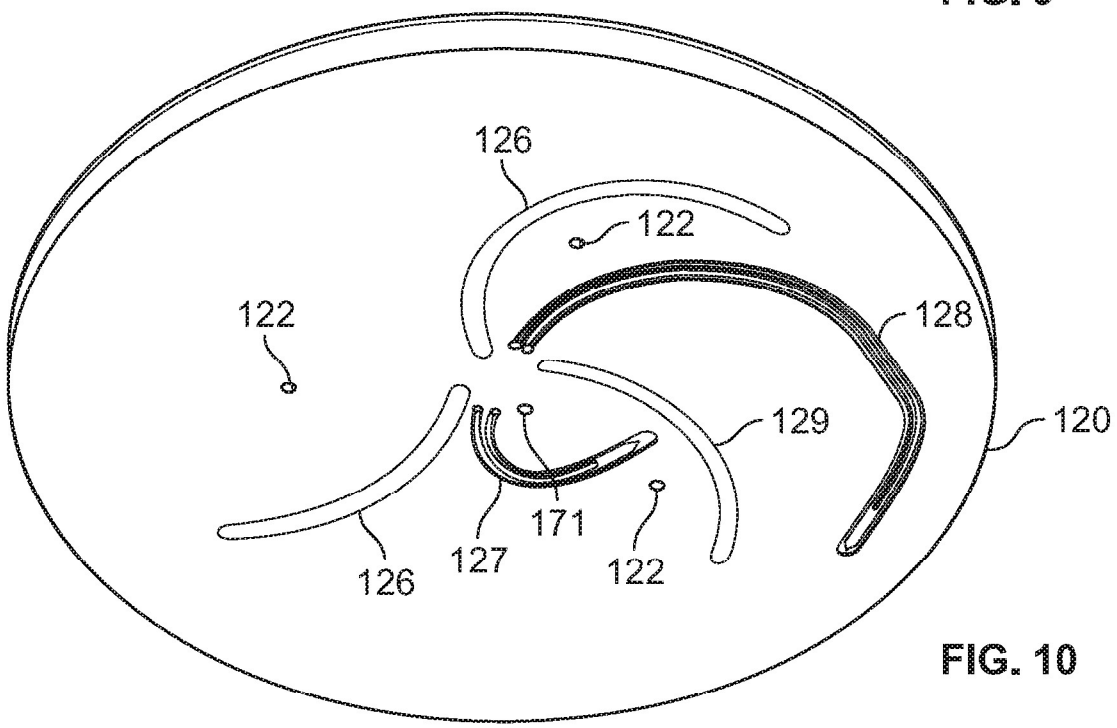
126
122
122
128
129
120
171
127
126
122

FIG. 10

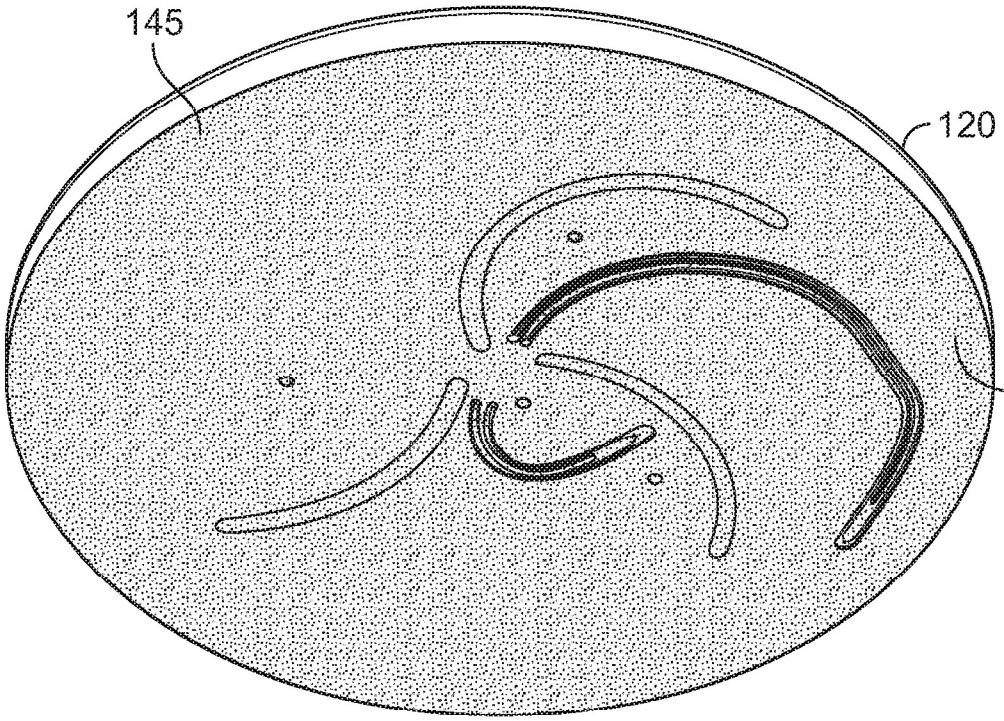
145
120
116

FIG. 11

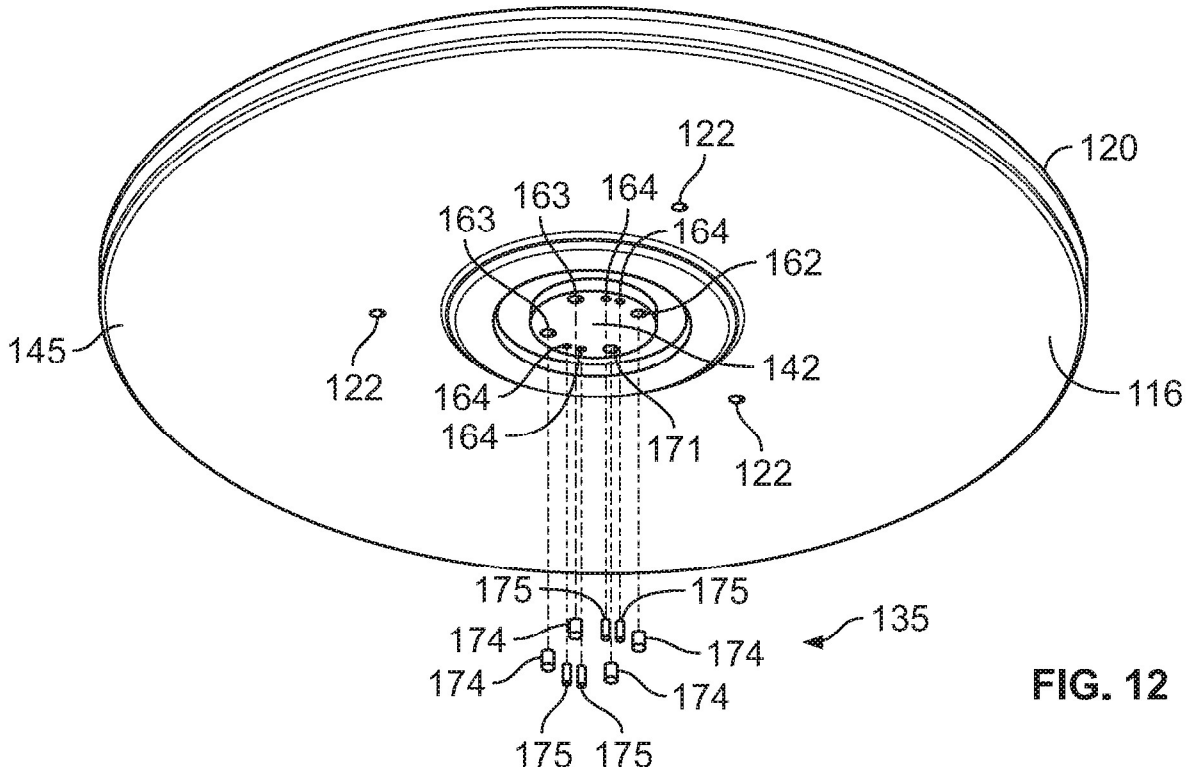
122
120
163
163
164
164
162
145
122
142
116
164
164
171
122
175
175
135
174
174
174
174
175
175

FIG. 12

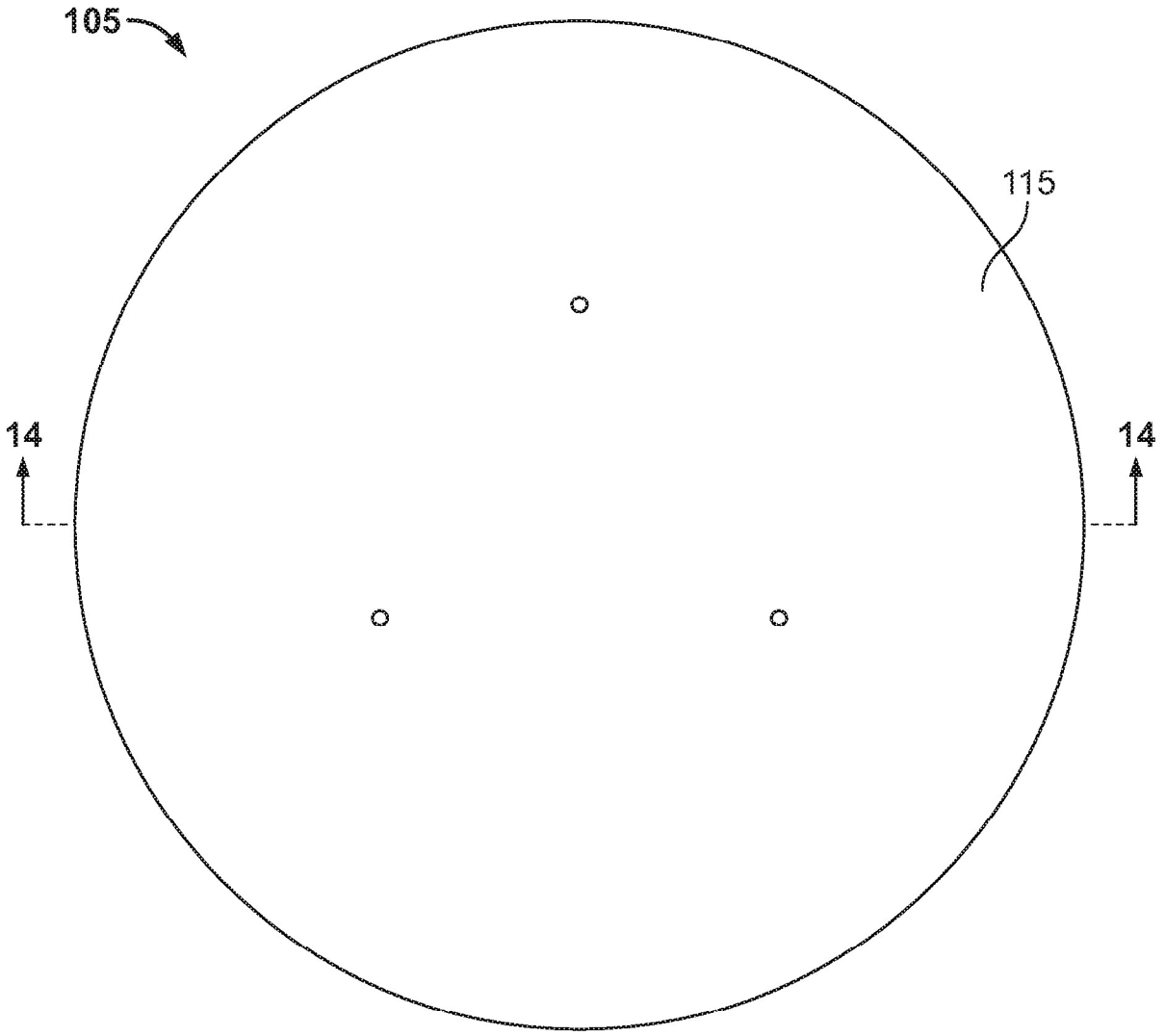

FIG. 13

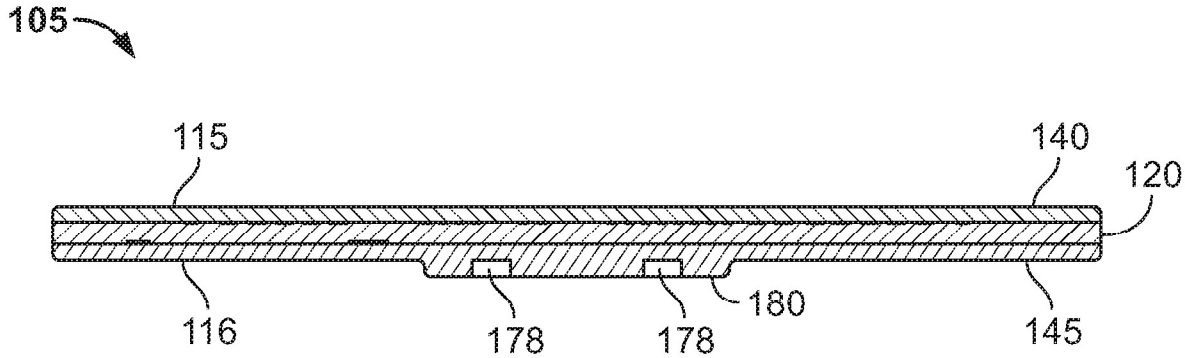

FIG. 14

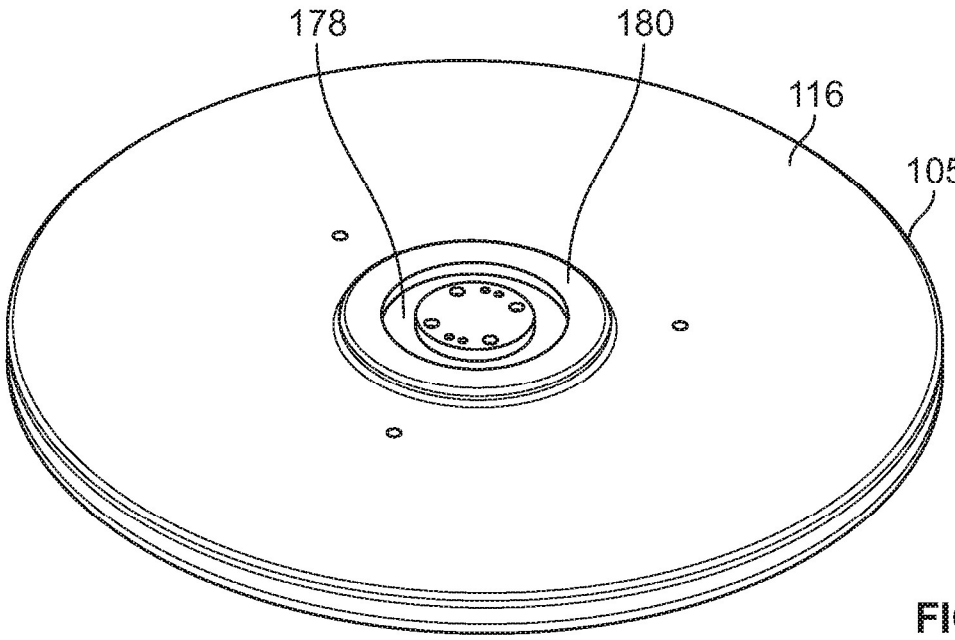

FIG. 15

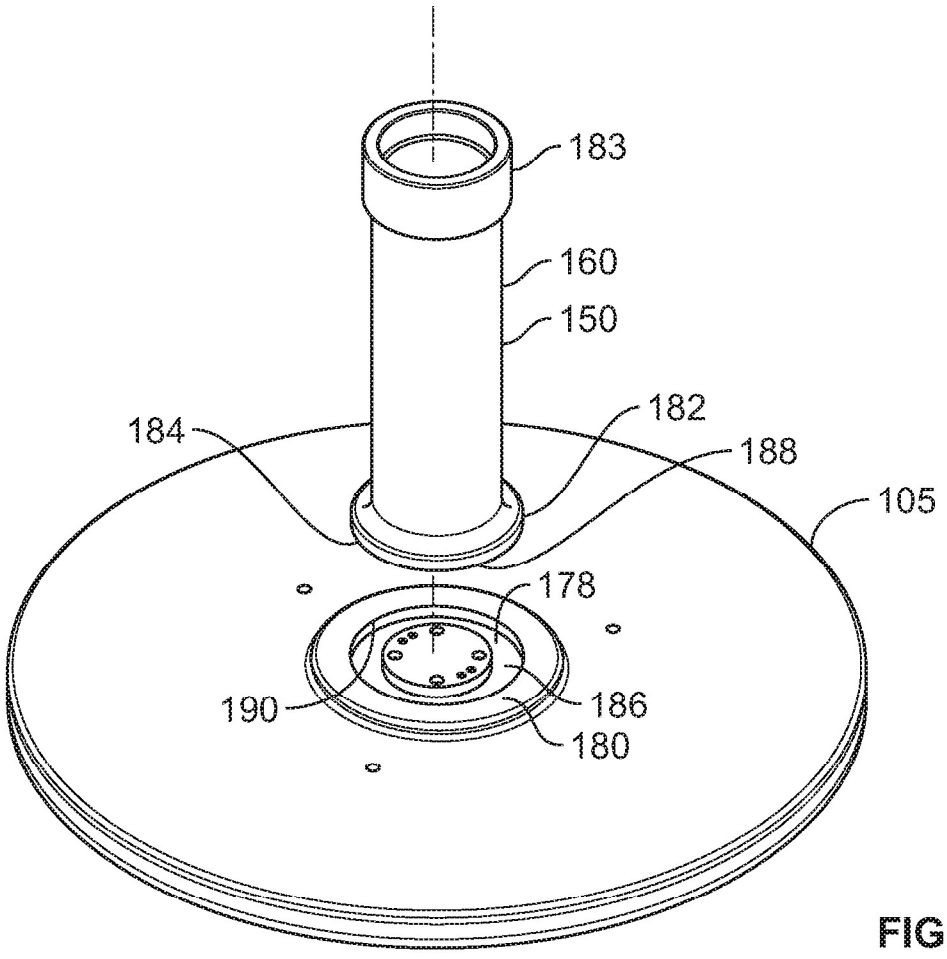

FIG. 16

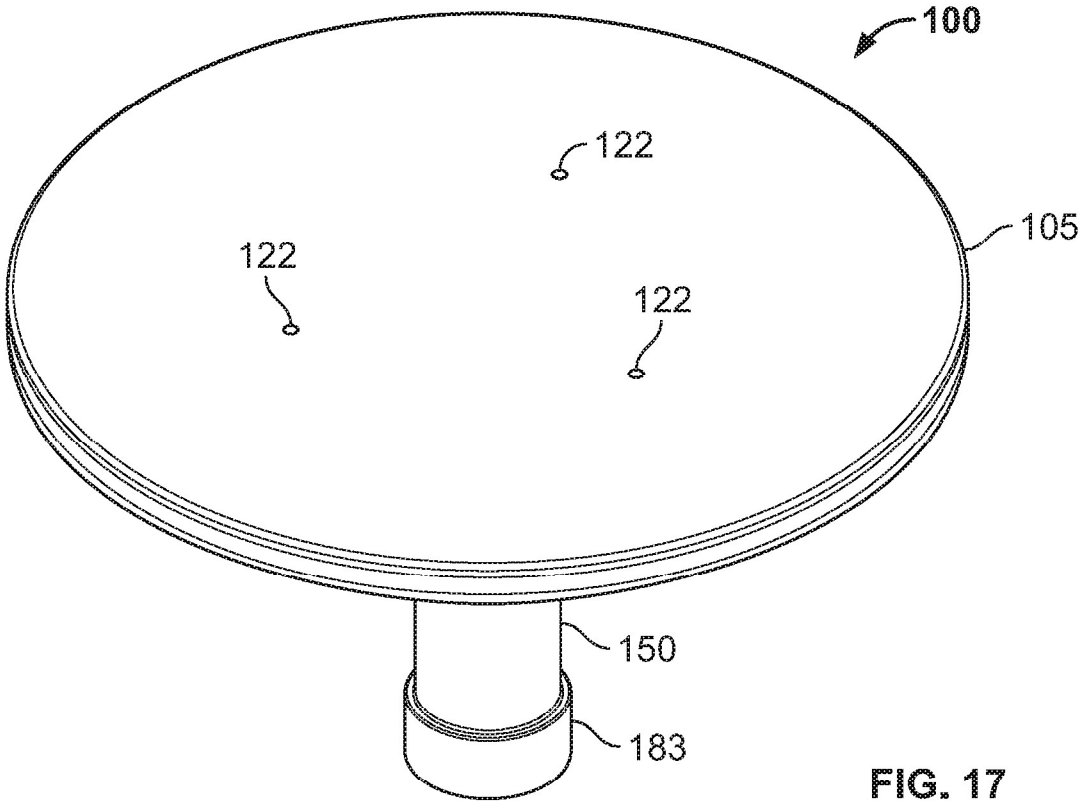

FIG. 17

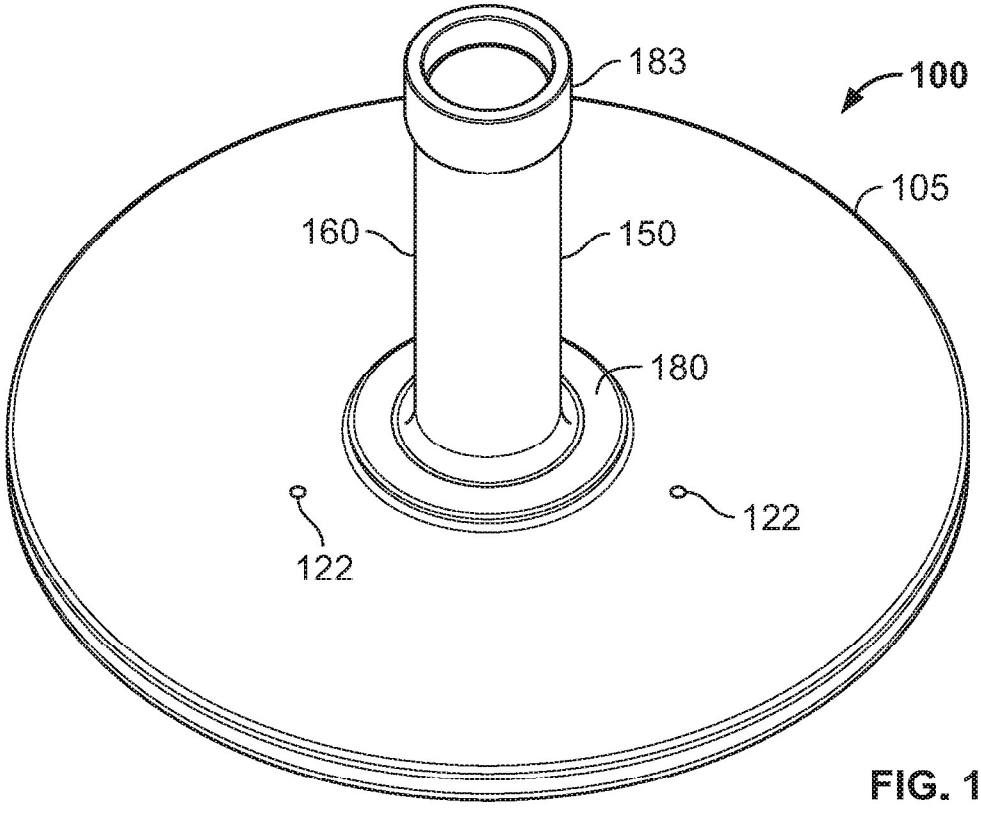

FIG. 18

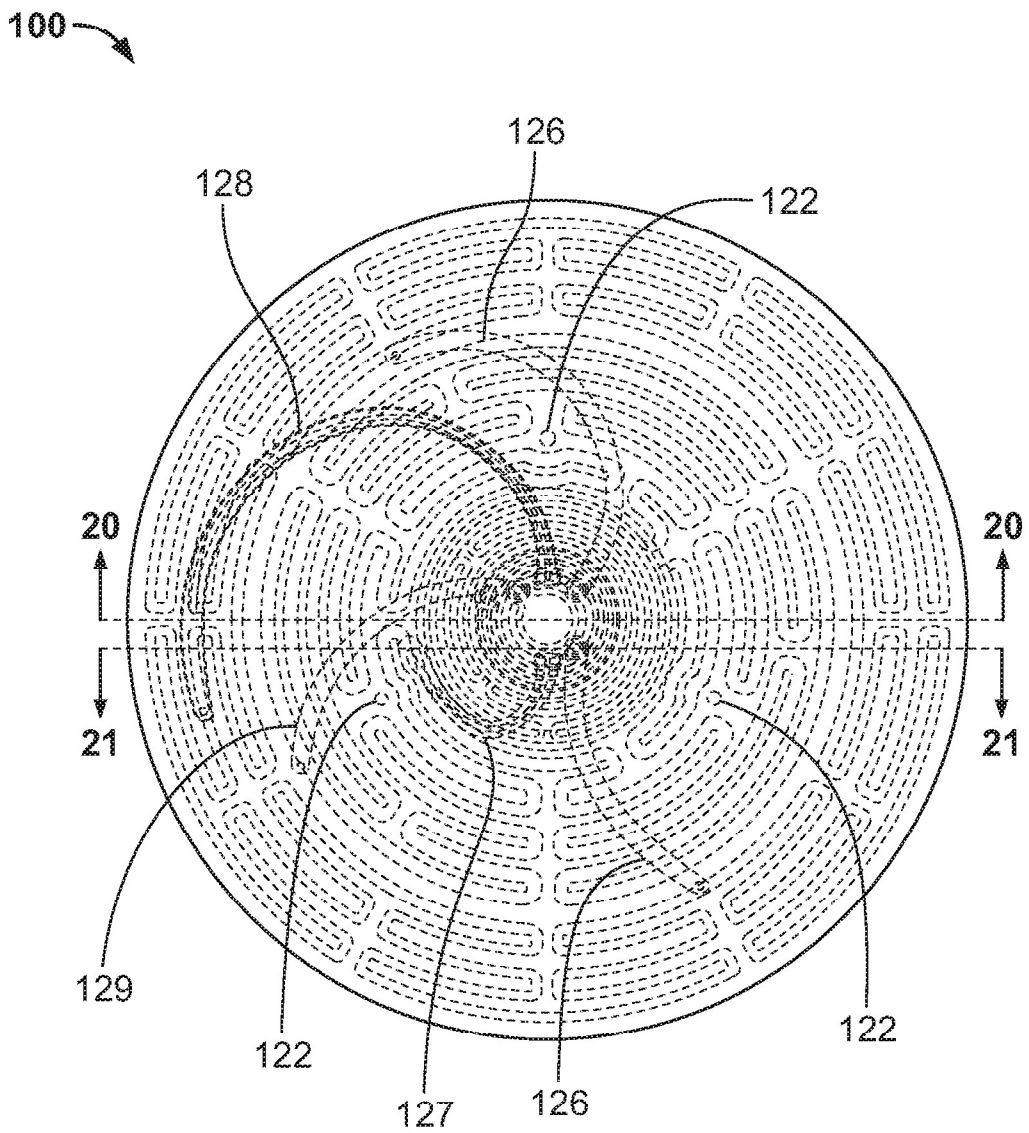

FIG. 19

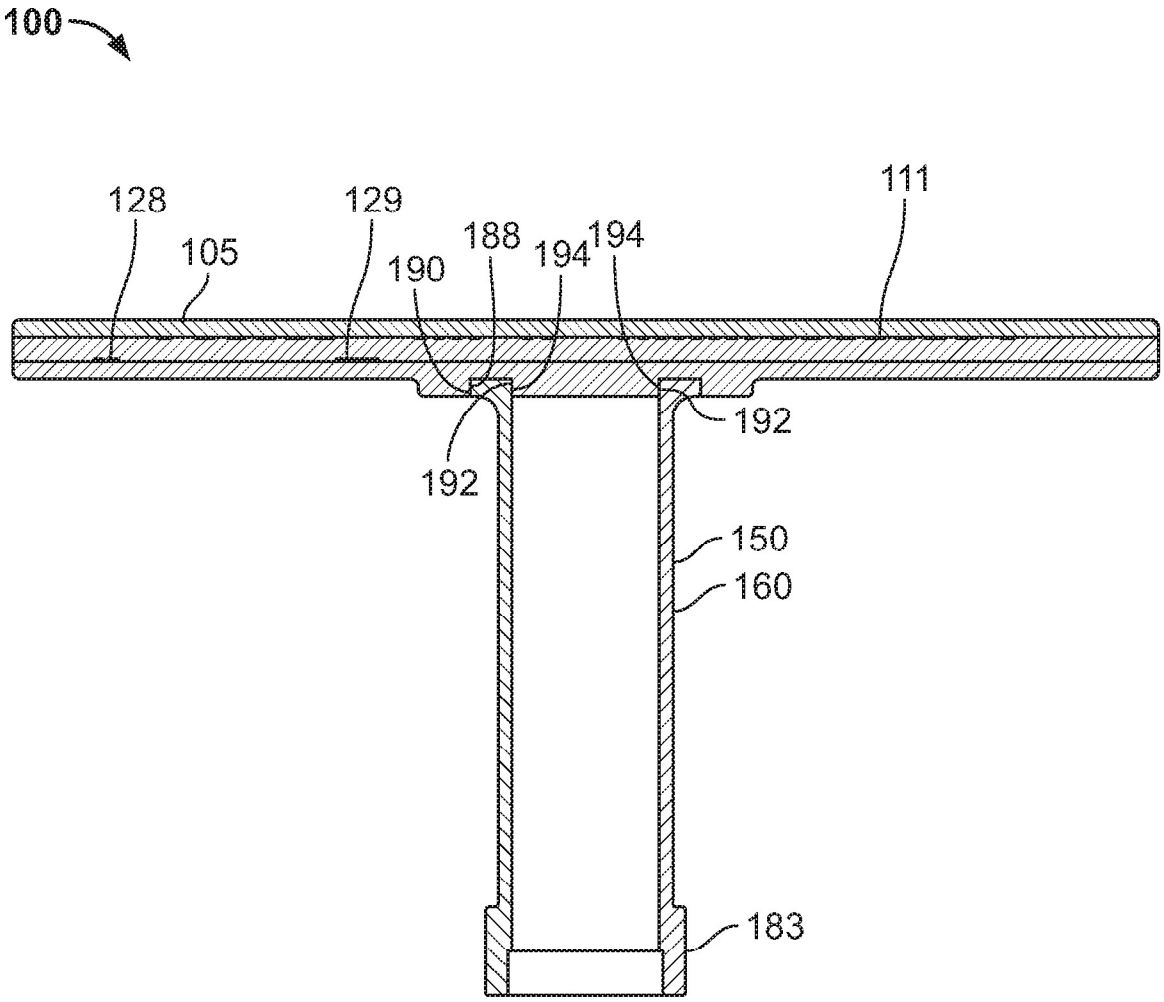

FIG. 20

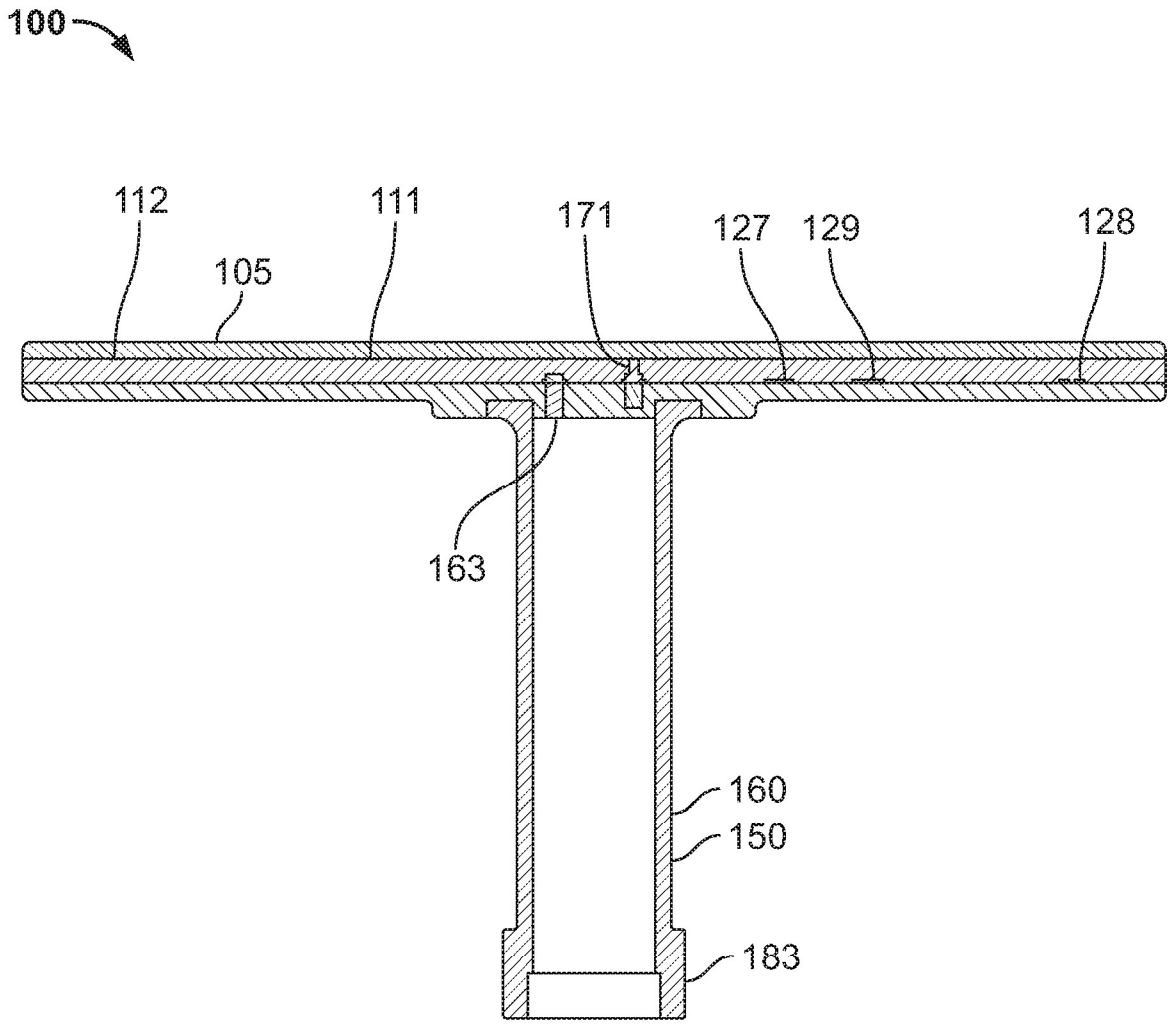

FIG. 21

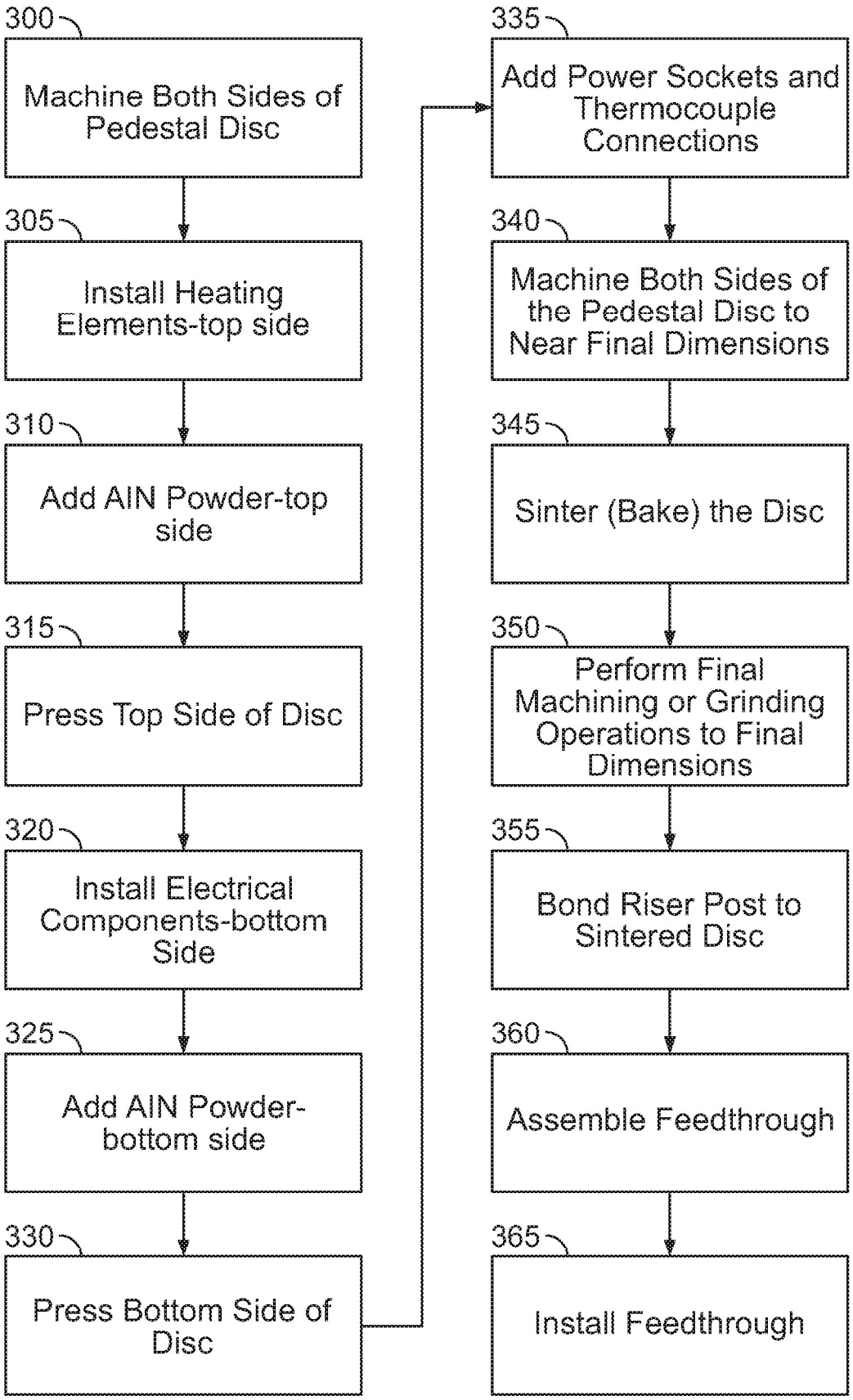
300
Machine Both Sides of Pedestal Disc
305
Install Heating Elements-top side
310
Add AlN Powder-top side
315
Press Top Side of Disc
320
Install Electrical Components-bottom Side
325
Add AlN Powder-bottom side
330
Press Bottom Side of Disc
335
Add Power Sockets and Thermocouple Connections
340
Machine Both Sides of the Pedestal Disc to Near Final Dimensions
345
Sinter (Bake) the Disc
350
Perform Final Machining or Grinding Operations to Final Dimensions
355
Bond Riser Post to Sintered Disc
360
Assemble Feedthrough
365
Install Feedthrough

FIG. 22

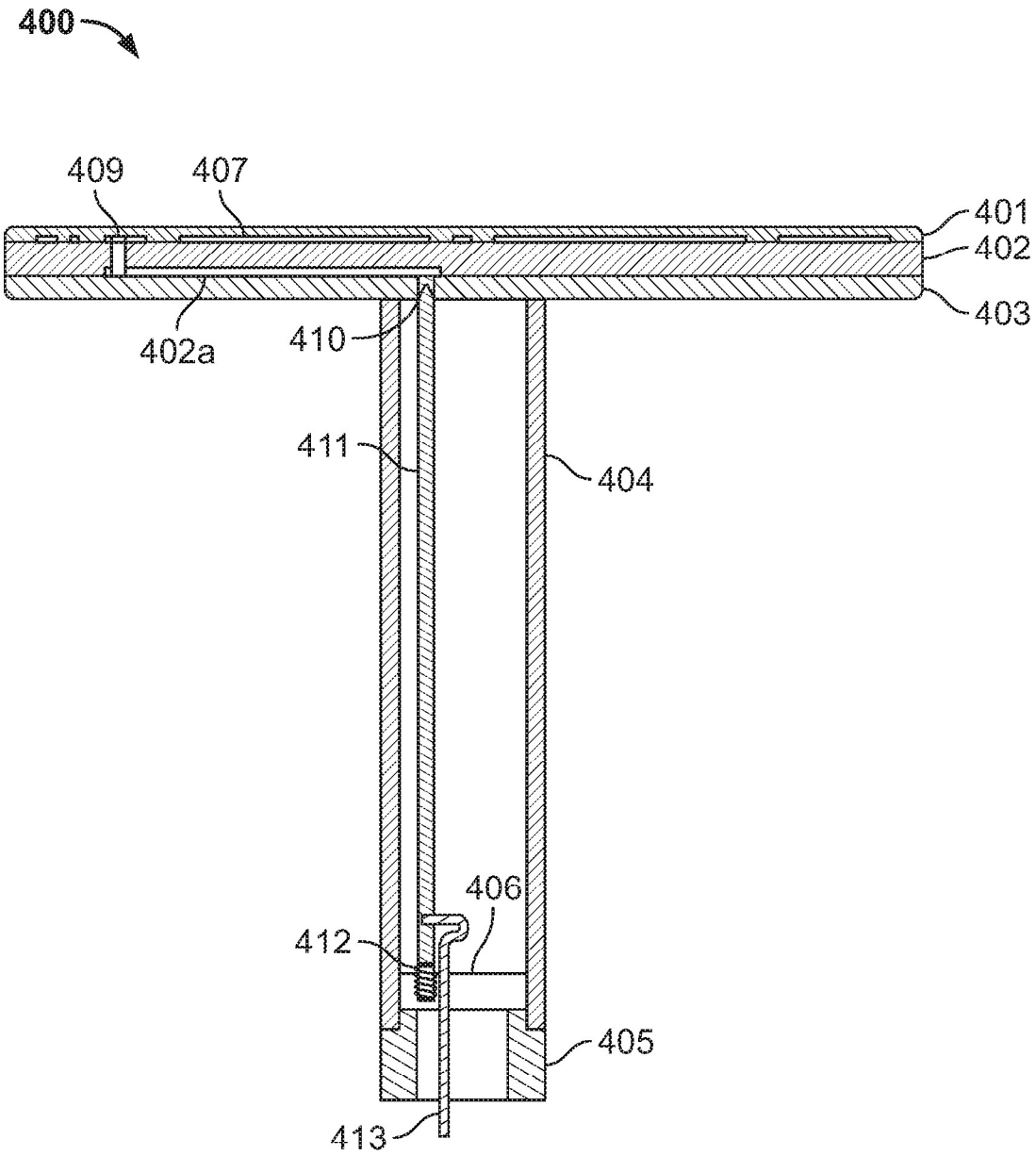

FIG. 23

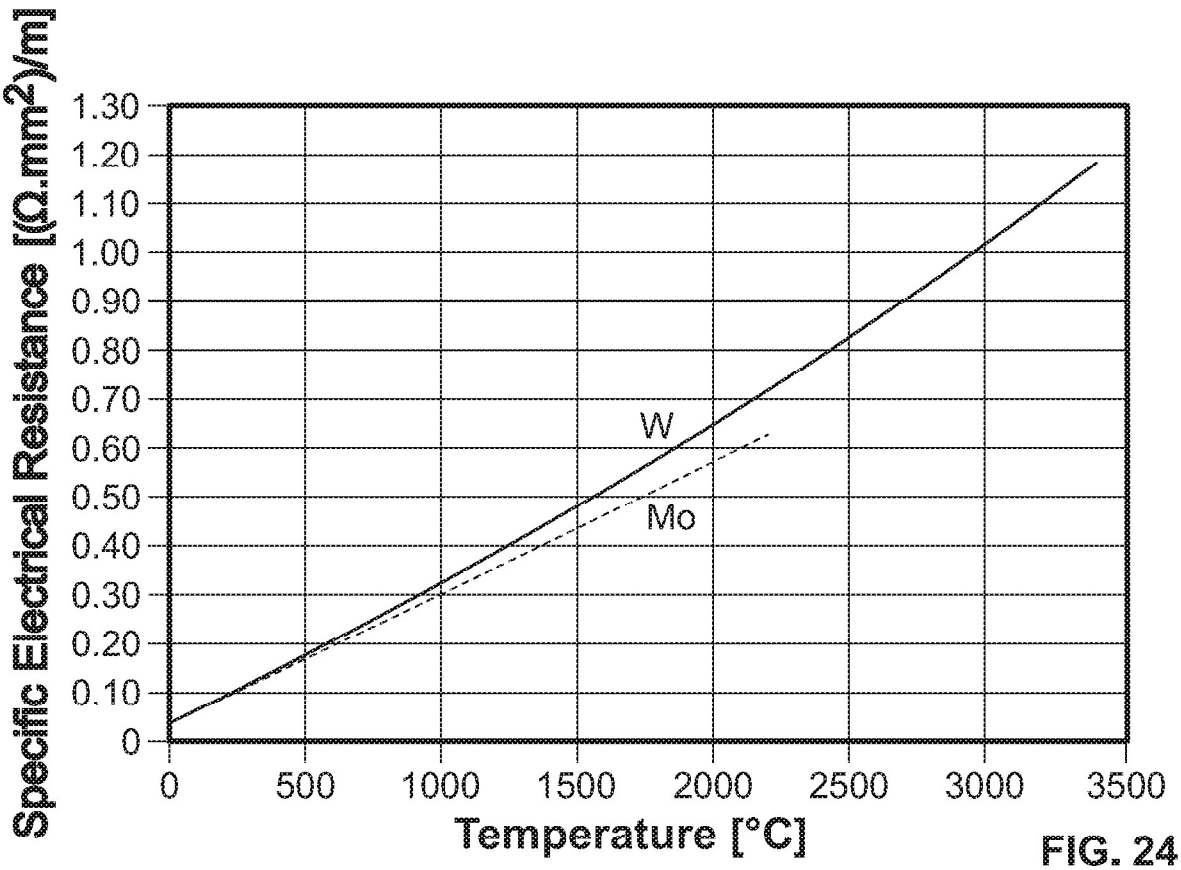
Specific Electrical Resistance [(Ω.mm²)/m]
1.30
1.20
1.10
1.00
0.90
0.80
0.70
0.60
0.50
0.40
0.30
0.20
0.10
0
0
500
1000
1500
2000
2500
3000
3500
Temperature [°C]
W
Mo

FIG. 24

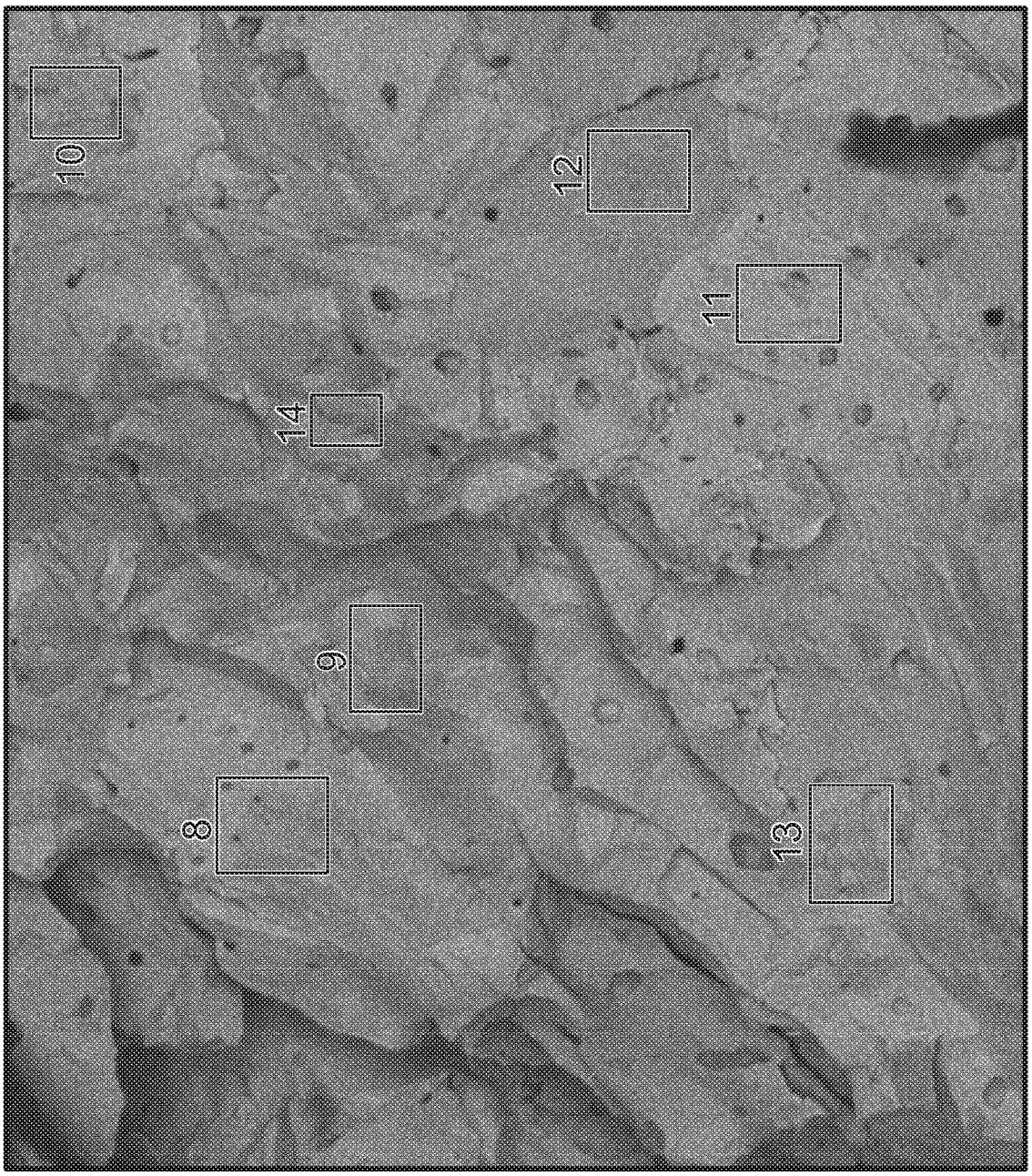

FIG. 25

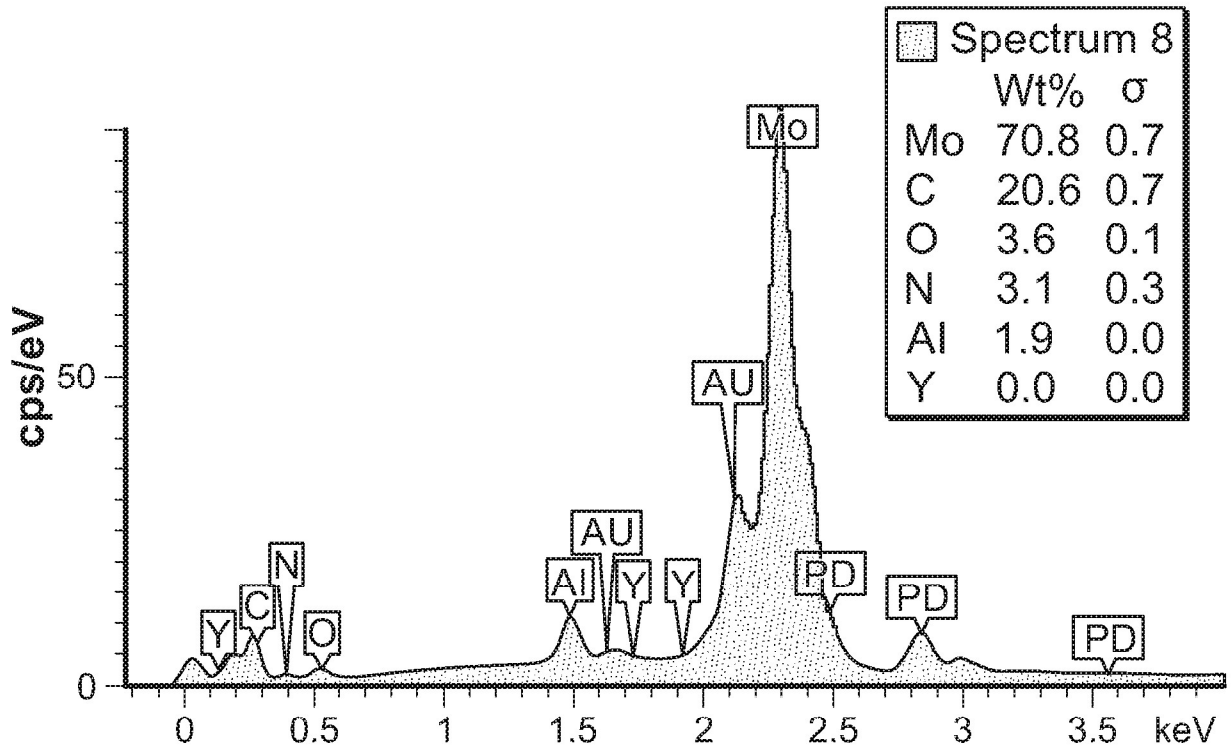
Spectrum 8
Wt% σ
Mo 70.8 0.7
C 20.6 0.7
O 3.6 0.1
N 3.1 0.3
Al 1.9 0.0
Y 0.0 0.0
cps/eV
50
0
Mo
AU
AU
Al
Y
Y
PD
PD
PD
Y
C
N
O
0
0.5
1
1.5
2
2.5
3
3.5
keV

FIG. 26

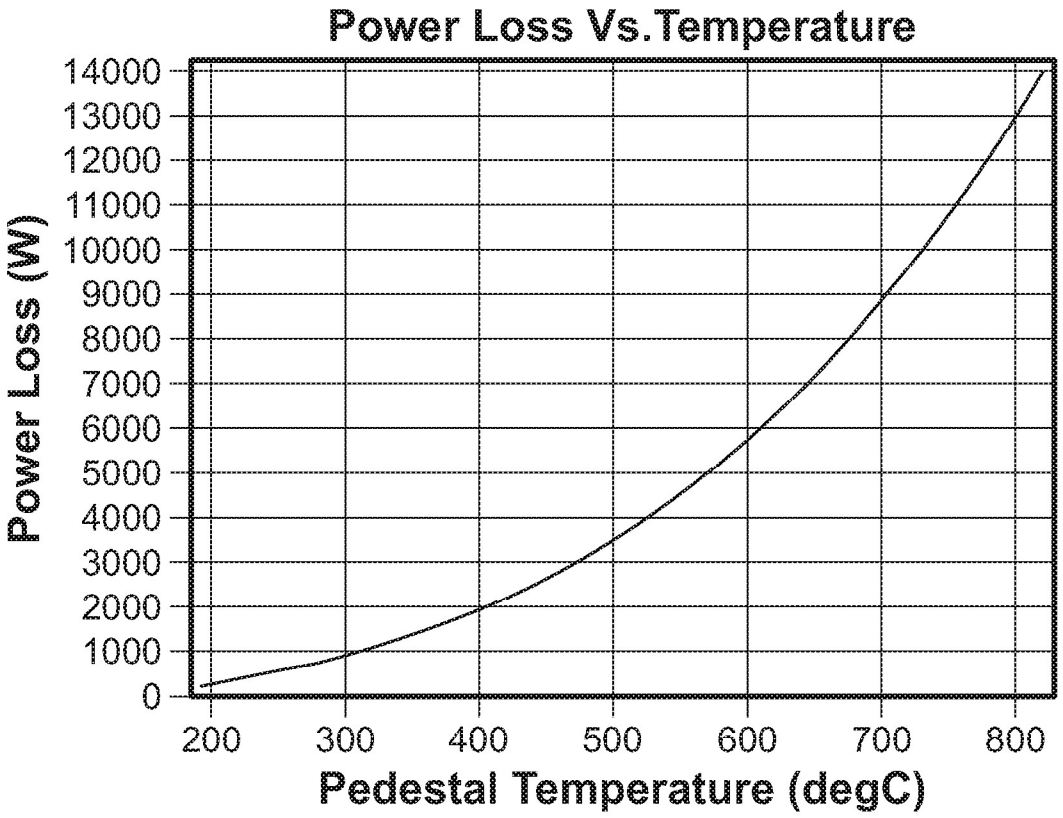
Power Loss Vs.Temperature
Power Loss (W)
14000
13000
12000
11000
10000
9000
8000
7000
6000
5000
4000
3000
2000
1000
0
200
300
400
500
600
700
800
Pedestal Temperature (degC)

FIG. 27

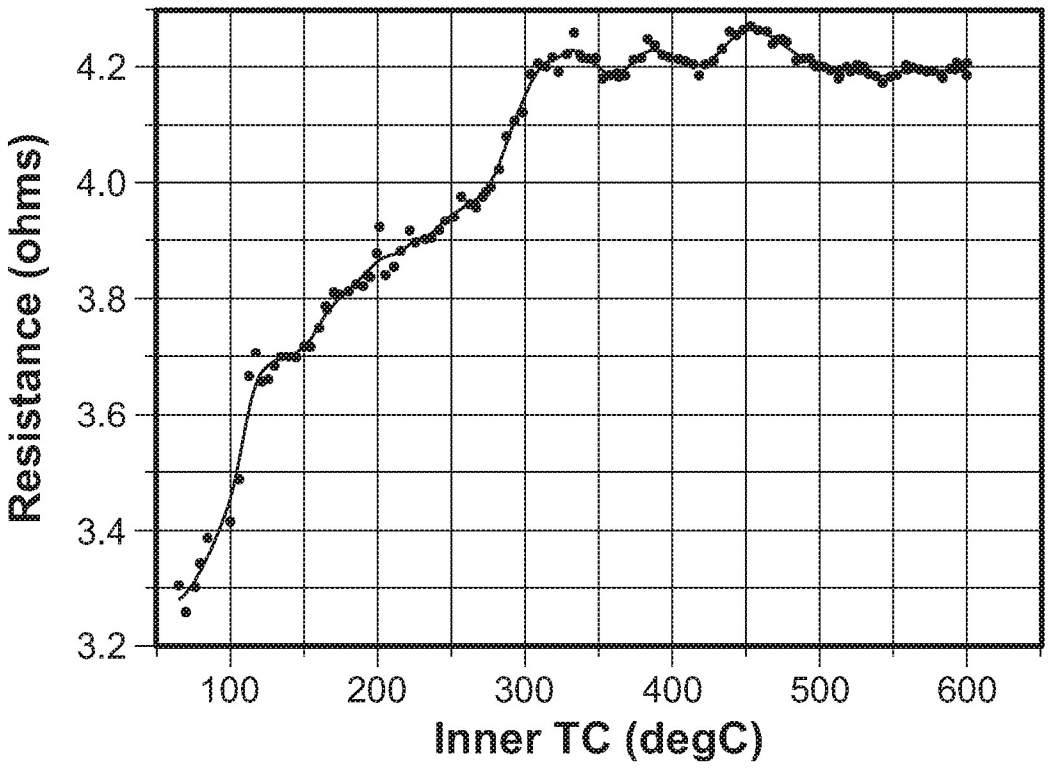
Resistance (ohms)
4.2
4.0
3.8
3.6
3.4
3.2
100
200
300
400
500
600
Inner TC (degC)

FIG. 28