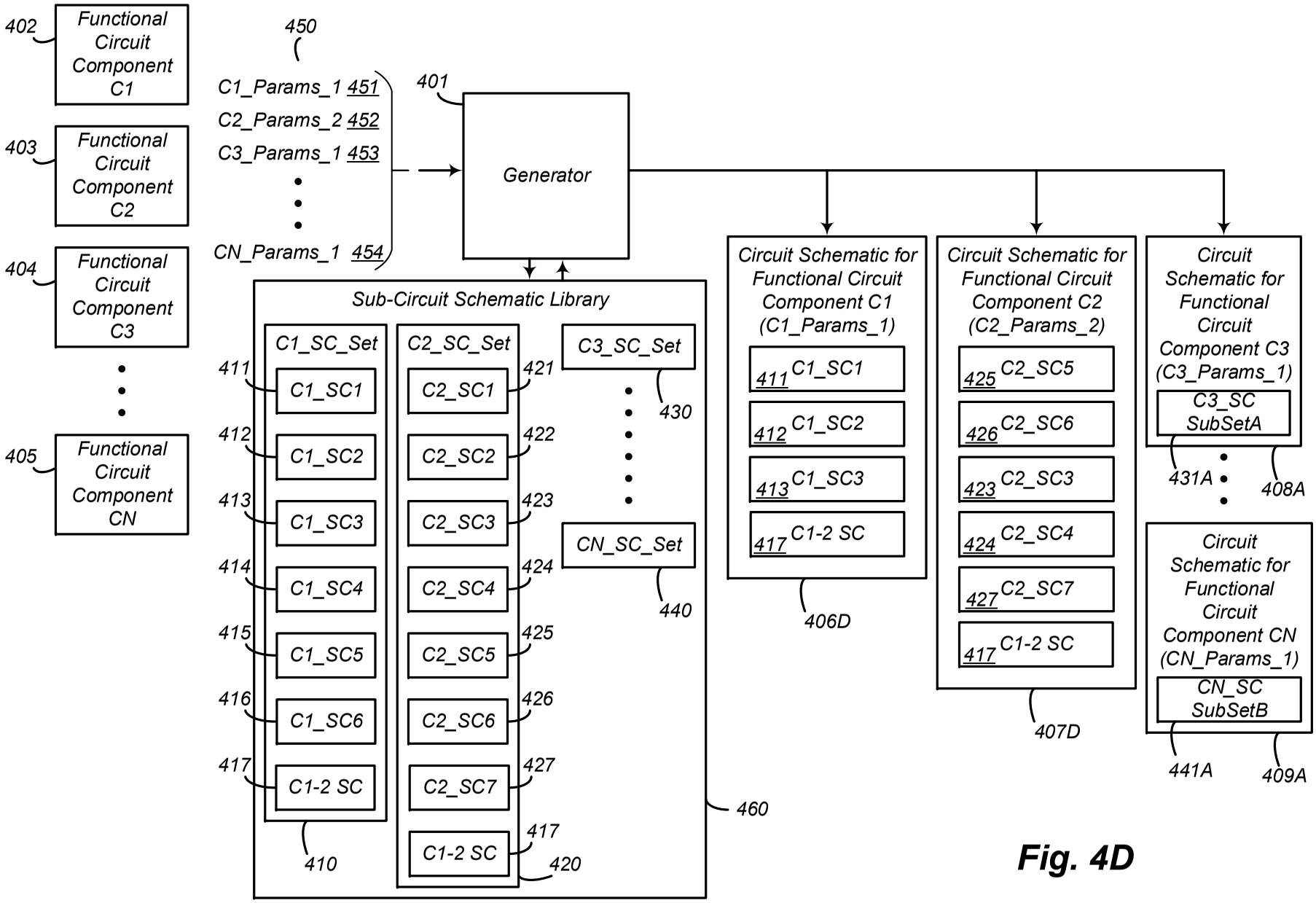
402
Functional Circuit Component C1
403
Functional Circuit Component C2
404
Functional Circuit Component C3
405
Functional Circuit Component CN
450
C1_Params_1 451
C2_Params_2 452
C3_Params_1 453
CN_Params_1 454
401
Generator
Sub-Circuit Schematic Library
C1_SC_Set
C1_SC1
C1_SC2
C1_SC3
C1_SC4
C1_SC5
C1_SC6
C1-2 SC
411
412
413
414
415
416
417
410
C2_SC_Set
C2_SC1
C2_SC2
C2_SC3
C2_SC4
C2_SC5
C2_SC6
C2_SC7
C1-2 SC
421
422
423
424
425
426
427
417
420
C3_SC_Set
430
CN_SC_Set
440
460
Circuit Schematic for Functional Circuit Component C1 (C1_Params_1)
411 C1_SC1
412 C1_SC2
413 C1_SC3
417 C1-2 SC
406D
Circuit Schematic for Functional Circuit Component C2 (C2_Params_2)
425 C2_SC5
426 C2_SC6
423 C2_SC3
424 C2_SC4
427 C2_SC7
417 C1-2 SC
407D
Circuit Schematic for Functional Circuit Component C3 (C3_Params_1)
C3_SC SubSetA
431A
408A
Circuit Schematic for Functional Circuit Component CN (CN_Params_1)
CN_SC SubSetB
441A
409A

Fig. 4D

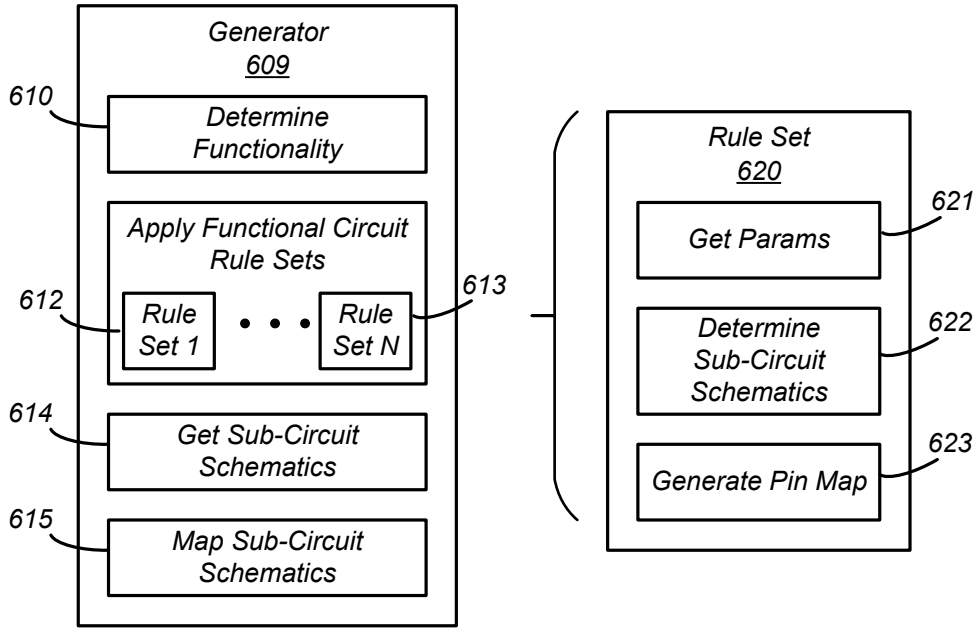
Generator
609
610
Determine Functionality
Apply Functional Circuit Rule Sets
612
Rule Set 1
Rule Set N
613
614
Get Sub-Circuit Schematics
615
Map Sub-Circuit Schematics
Rule Set
620
621
Get Params
622
Determine Sub-Circuit Schematics
623
Generate Pin Map

Fig. 6A

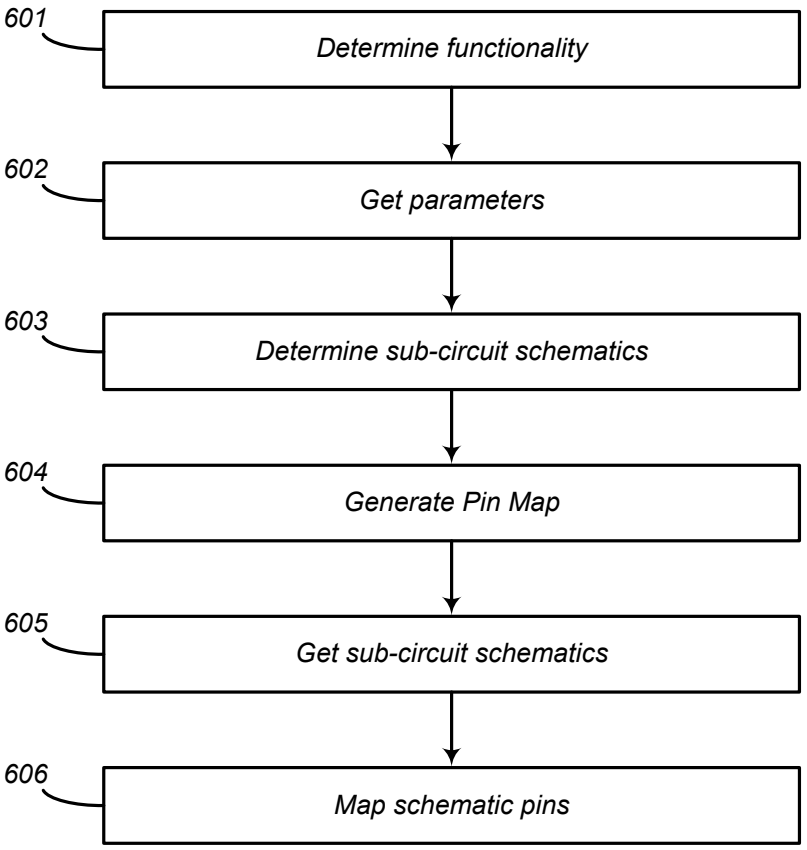
601
Determine functionality
602
Get parameters
603
Determine sub-circuit schematics
604
Generate Pin Map
605
Get sub-circuit schematics
606
Map schematic pins

Fig. 6B

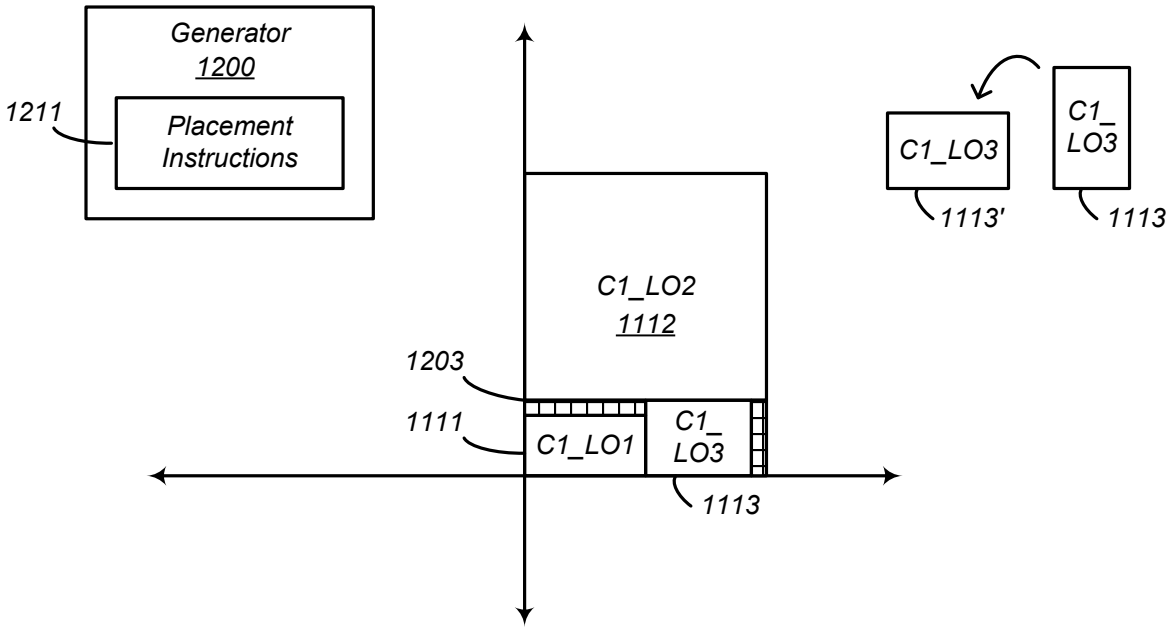
Generator
1200
1211
Placement Instructions
C1_LO2
1112
1203
1111
C1_LO1
C1_ LO3
1113
C1_LO3
1113'
C1_ LO3
1113

Fig. 14

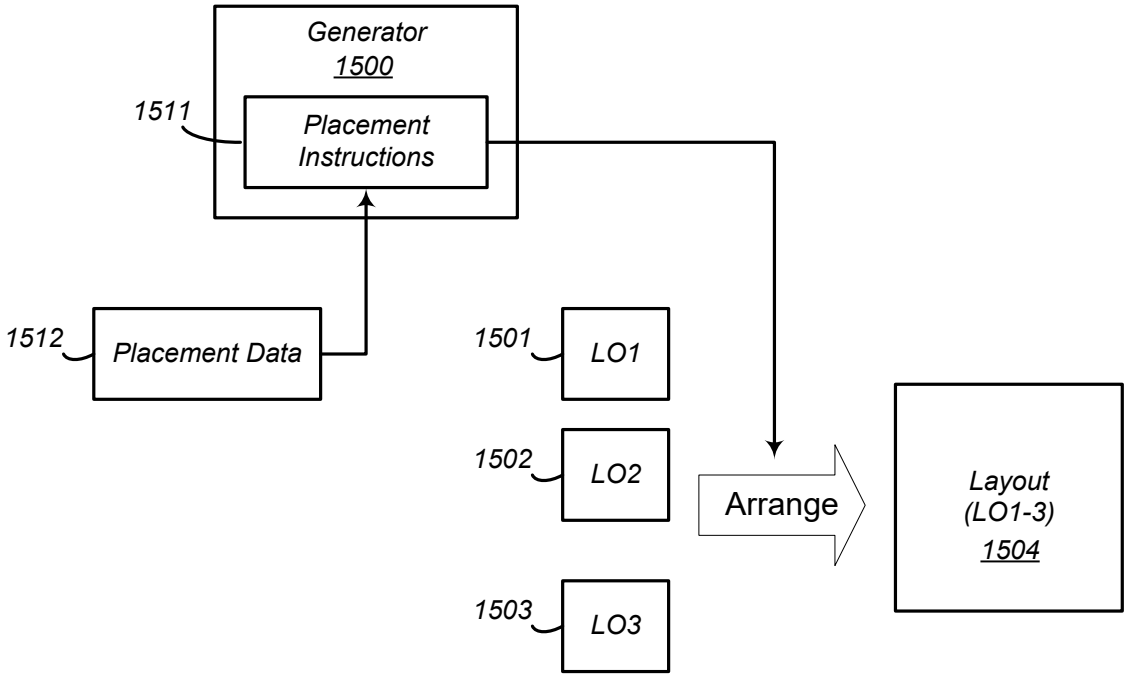
Generator
1500
1511
Placement Instructions
1512
Placement Data
1501
LO1
1502
LO2
1503
LO3
Arrange
Layout
(LO1-3)
1504

Fig. 15

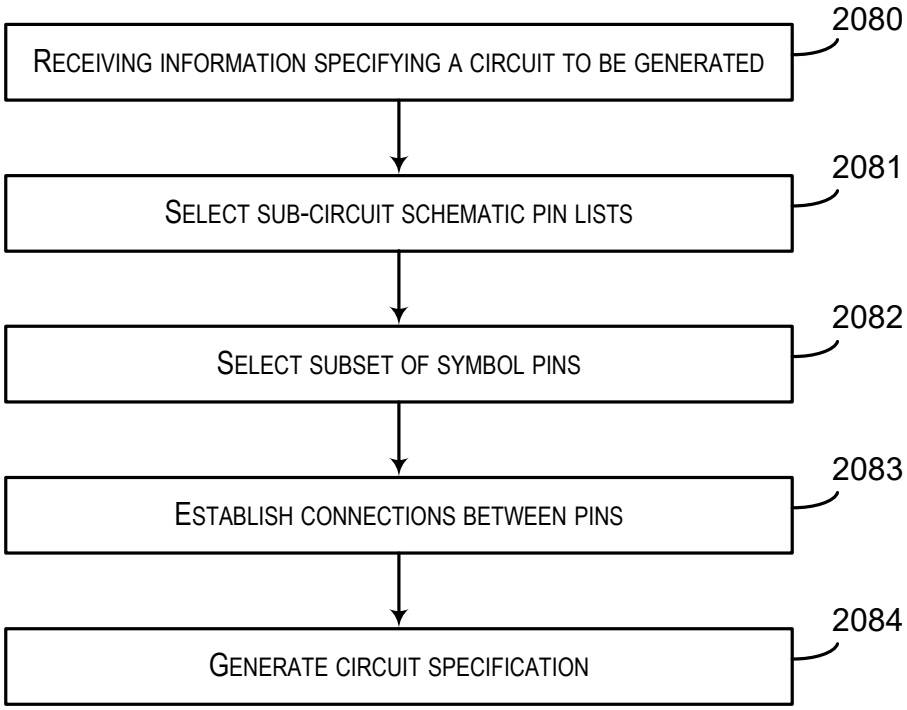

FIG. 20B

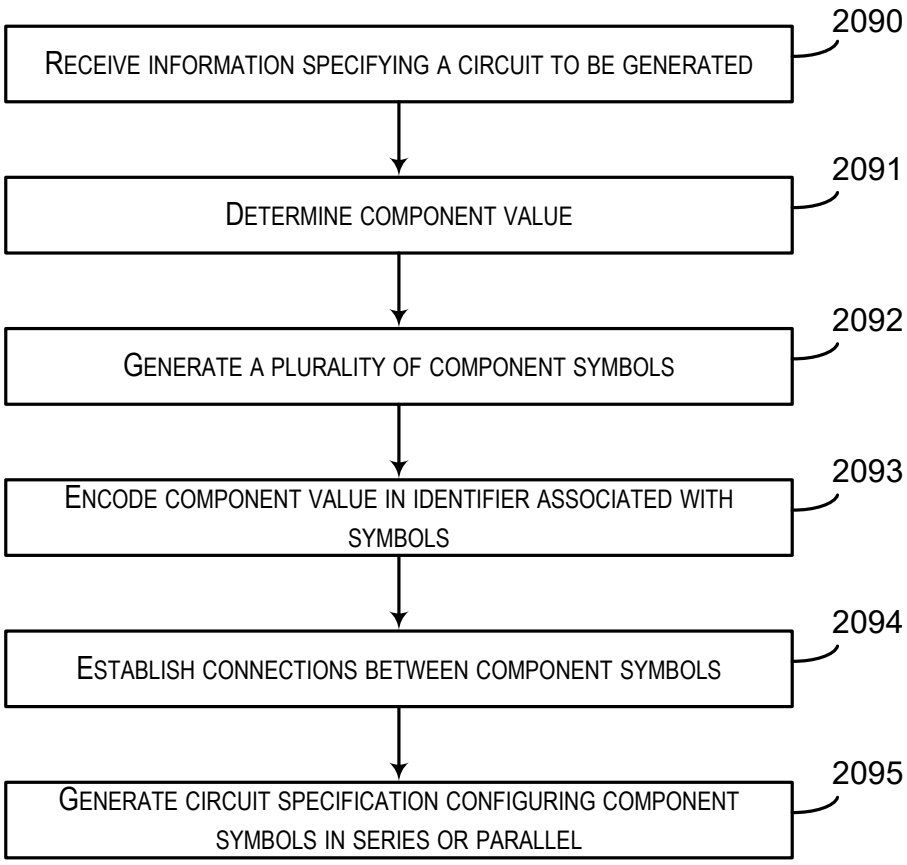

FIG. 20C

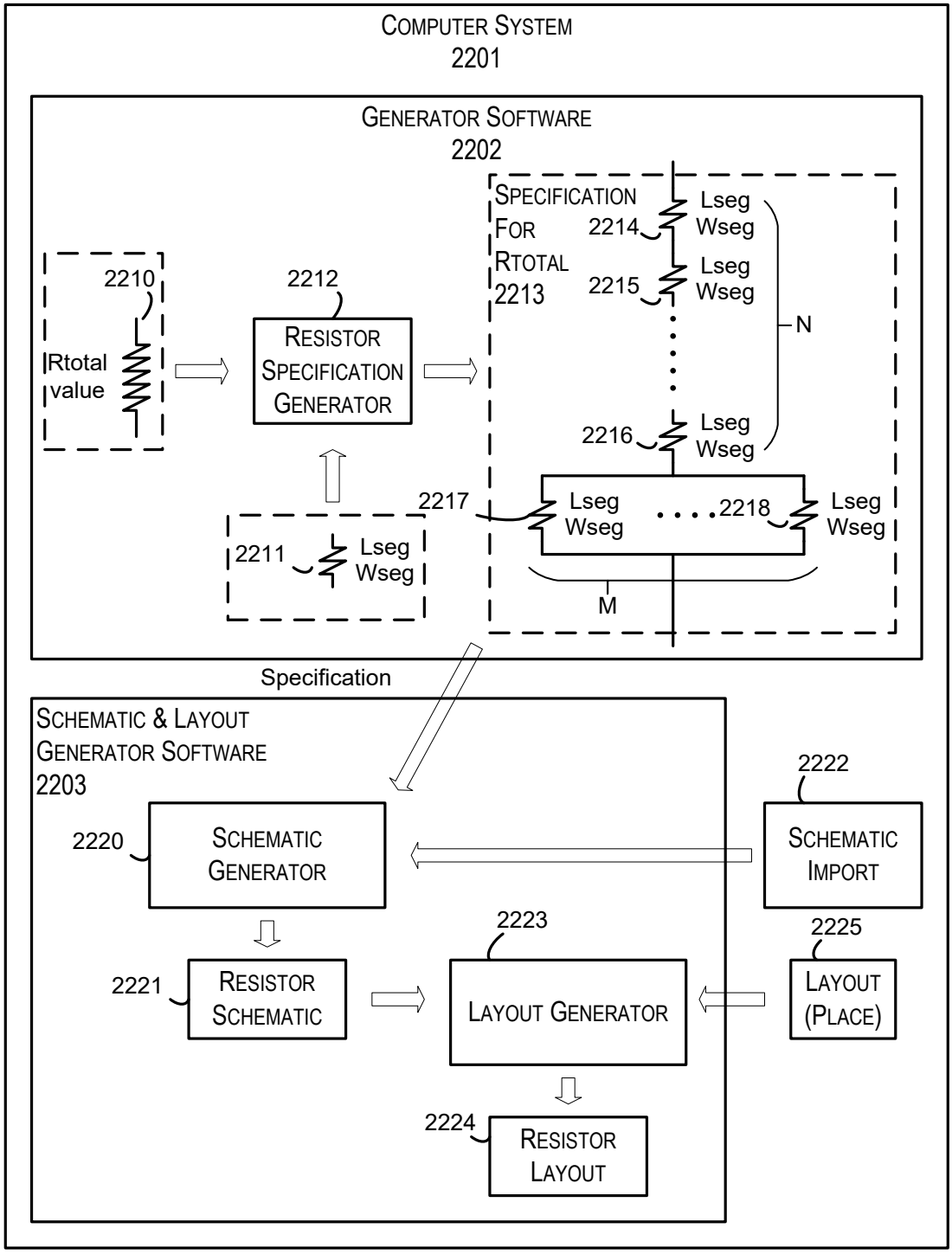
COMPUTER SYSTEM
2201
GENERATOR SOFTWARE
2202
SPECIFICATION FOR RTOTAL
2213
2210
Rtotal value
2212
RESISTOR SPECIFICATION GENERATOR
2214
Lseg Wseg
2215
Lseg Wseg
N
2216
Lseg Wseg
2217
Lseg Wseg
2218
Lseg Wseg
M
2211
Lseg Wseg
Specification
SCHEMATIC & LAYOUT GENERATOR SOFTWARE
2203
2222
2220
SCHEMATIC GENERATOR
SCHEMATIC IMPORT
2223
2225
2221
RESISTOR SCHEMATIC
LAYOUT GENERATOR
LAYOUT (PLACE)
2224
RESISTOR LAYOUT

FIG. 22

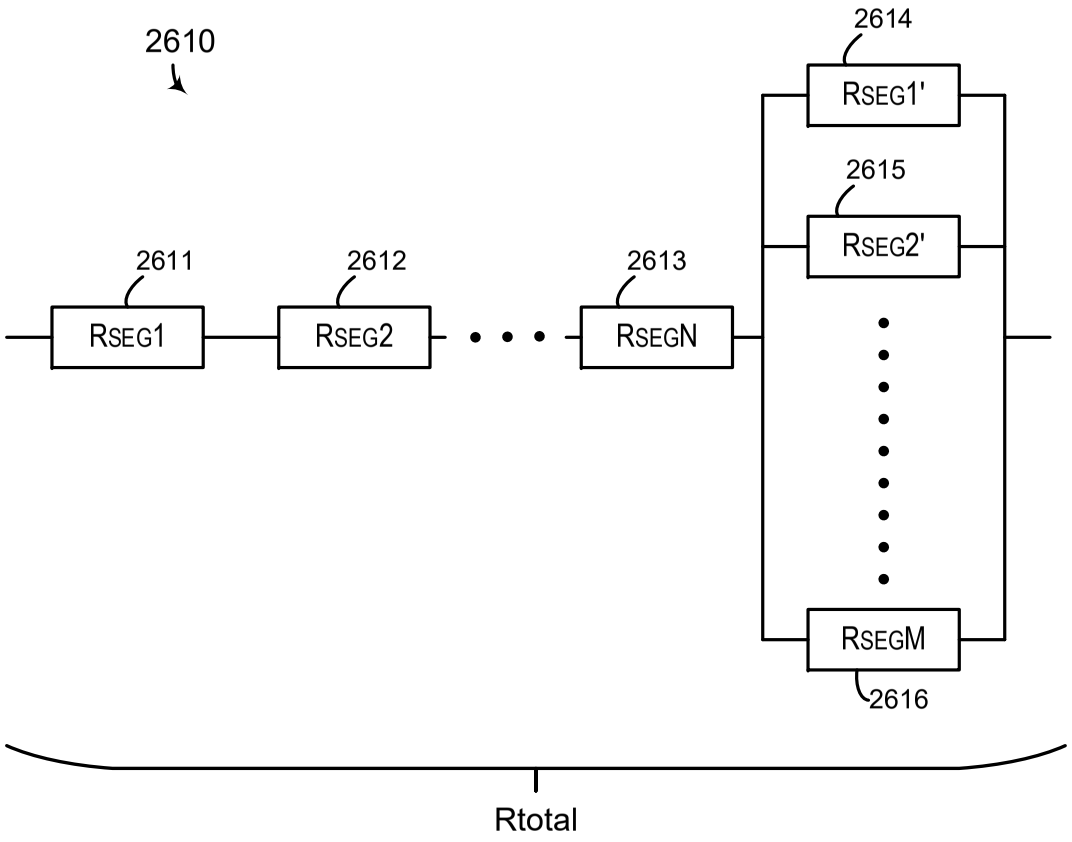
2610
2614
RSEG1'
2615
RSEG2'
2611
2612
2613
RSEG1
RSEG2
RSEGN
RSEGM
2616
Rtotal

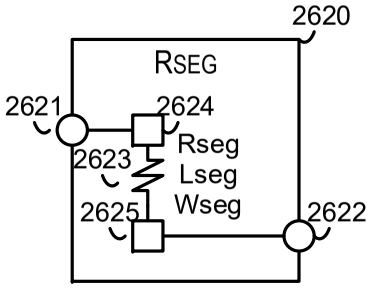
2620
RSEG
2621
2624
Rseg
2623
Lseg
Wseg
2625
2622

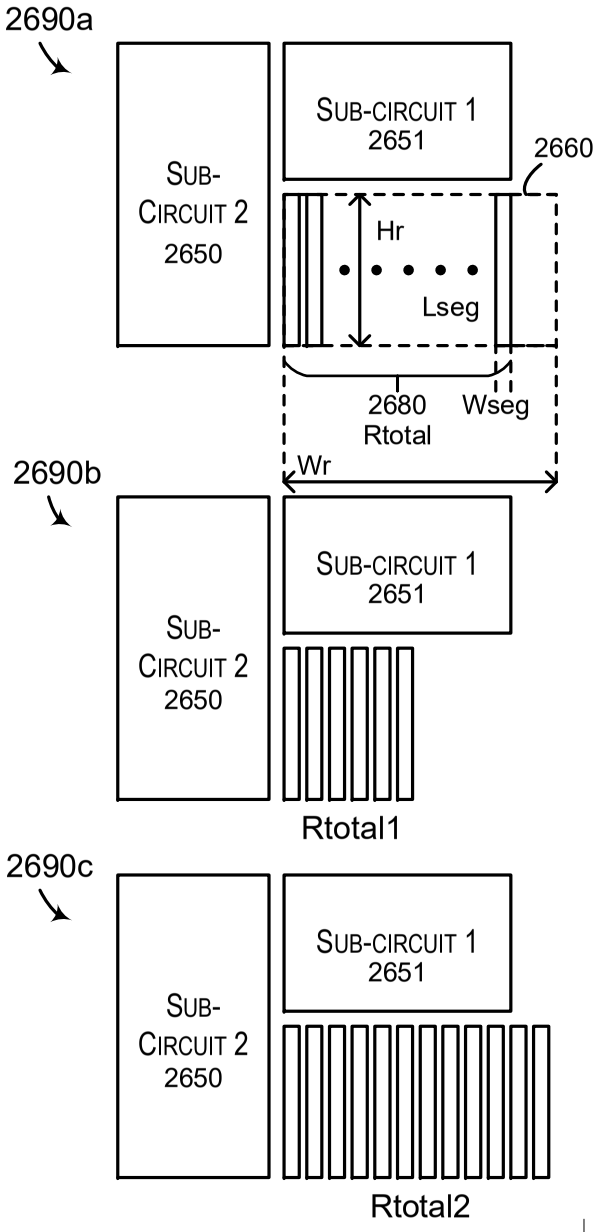
2690a
SUB-CIRCUIT 2 2650
SUB-CIRCUIT 1 2651
2660
Hr
Lseg
2680 Rtotal
Wseg
Wr
2690b
SUB-CIRCUIT 2 2650
SUB-CIRCUIT 1 2651
Rtotal1
2690c
SUB-CIRCUIT 2 2650
SUB-CIRCUIT 1 2651
Rtotal2

FIG. 26

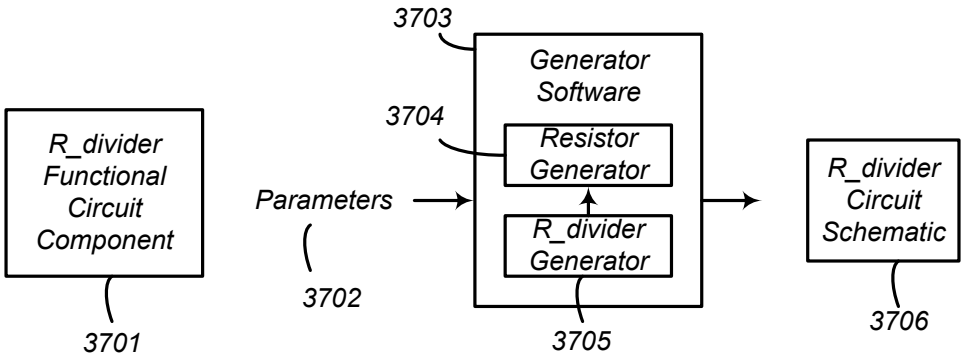

Fig. 37A

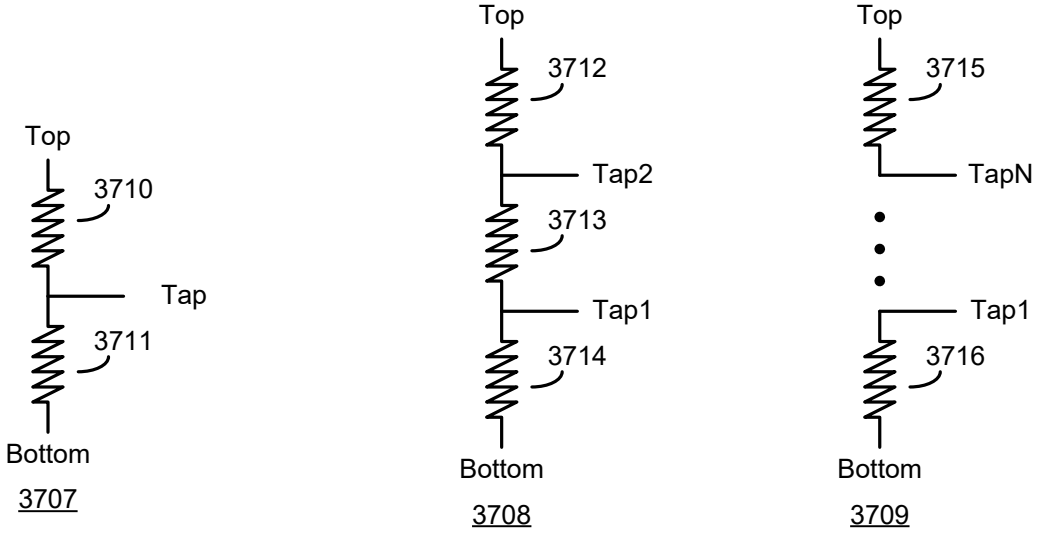

Fig. 37B

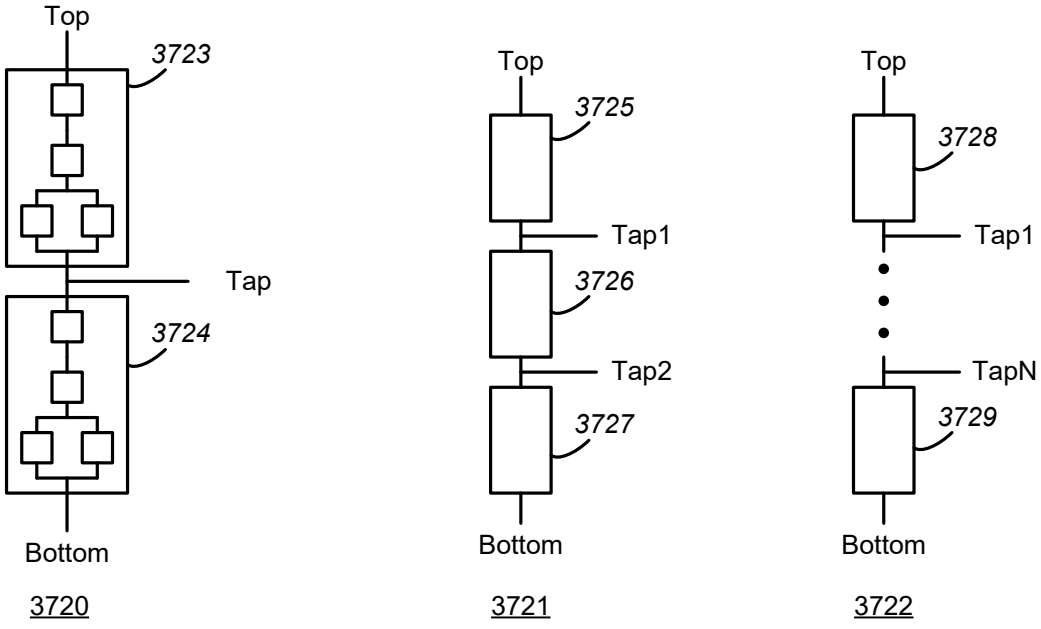

Fig. 37C

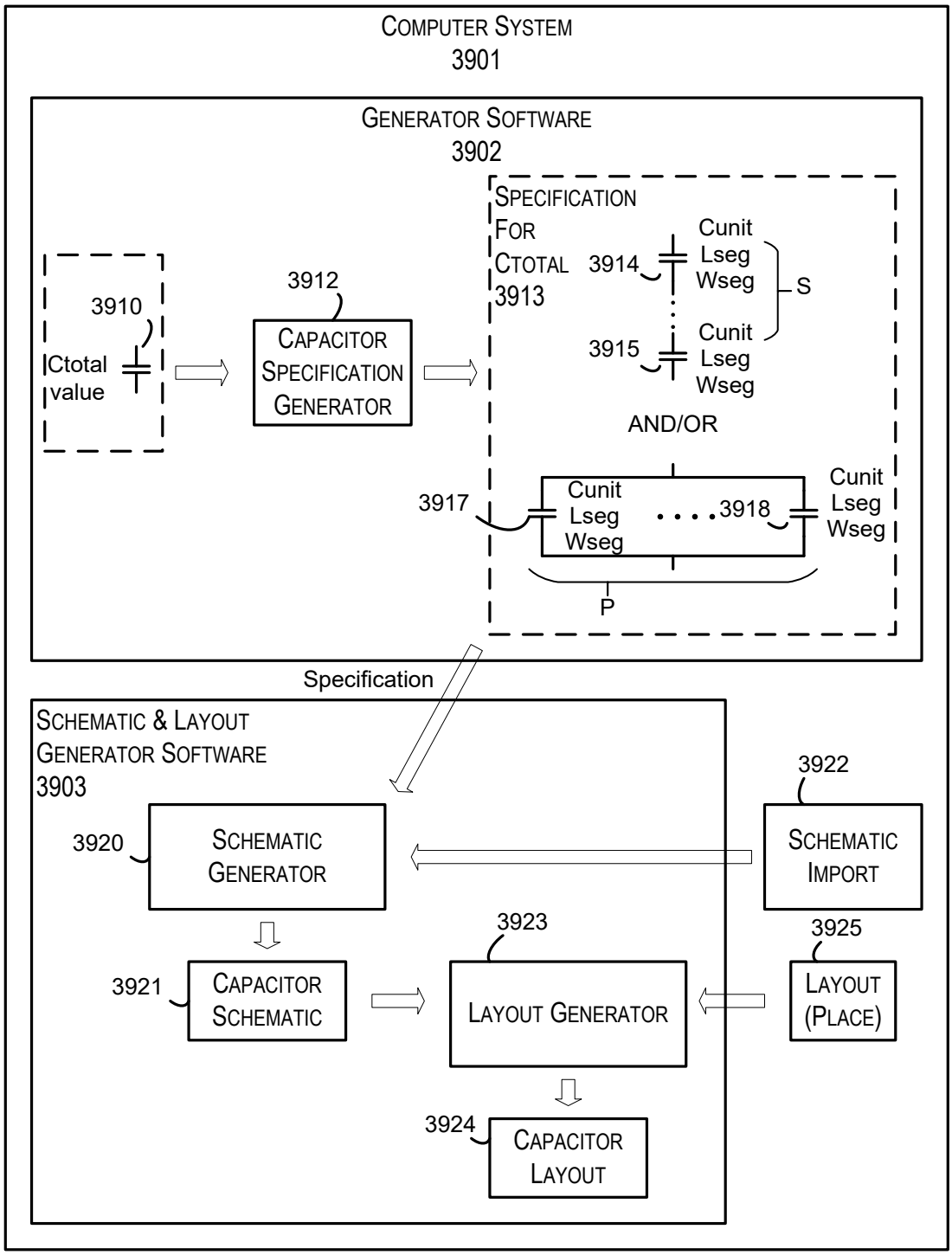
COMPUTER SYSTEM
3901
GENERATOR SOFTWARE
3902
SPECIFICATION
FOR
CTOTAL
3913
3910
Ctotal
value
3912
CAPACITOR
SPECIFICATION
GENERATOR
3914
Cunit
Lseg
Wseg
S
3915
Cunit
Lseg
Wseg
AND/OR
3917
Cunit
Lseg
Wseg
3918
Cunit
Lseg
Wseg
P
Specification
SCHEMATIC & LAYOUT
GENERATOR SOFTWARE
3903
3920
SCHEMATIC
GENERATOR
3922
SCHEMATIC
IMPORT
3921
CAPACITOR
SCHEMATIC
3923
LAYOUT GENERATOR
3925
LAYOUT
(PLACE)
3924
CAPACITOR
LAYOUT

FIG. 39

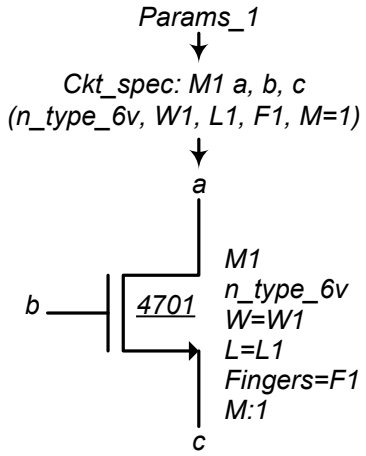

FIG. 47A

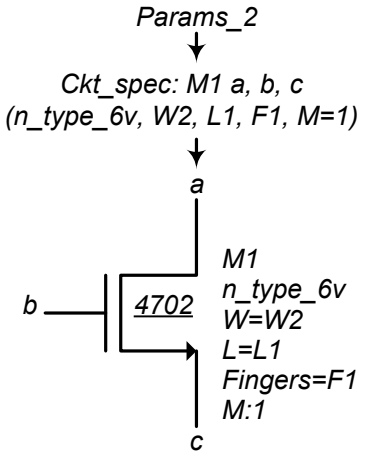

FIG. 47B

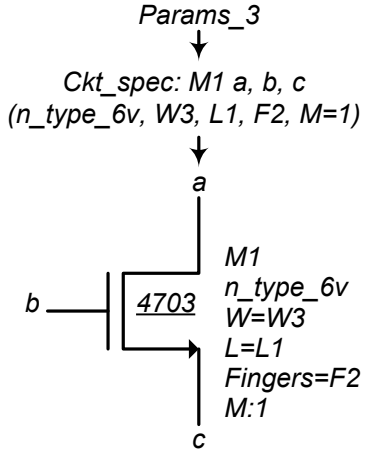

FIG. 47C

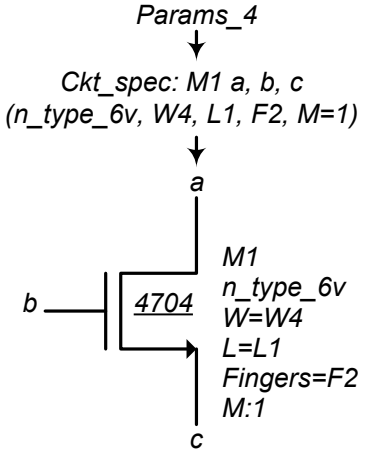

FIG. 47D

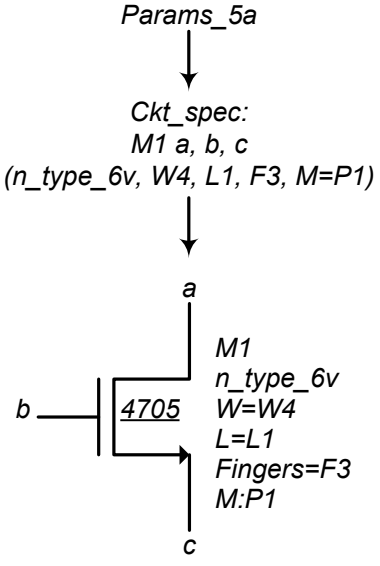

FIG. 47E

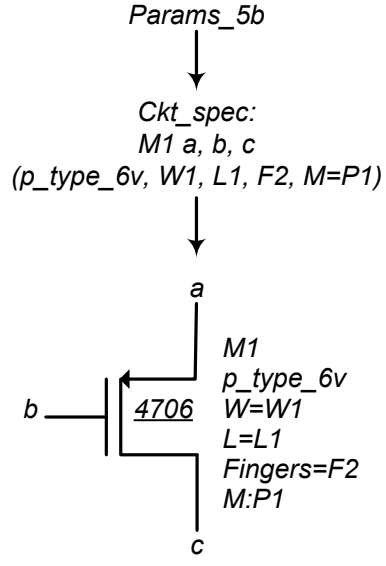

FIG. 47F

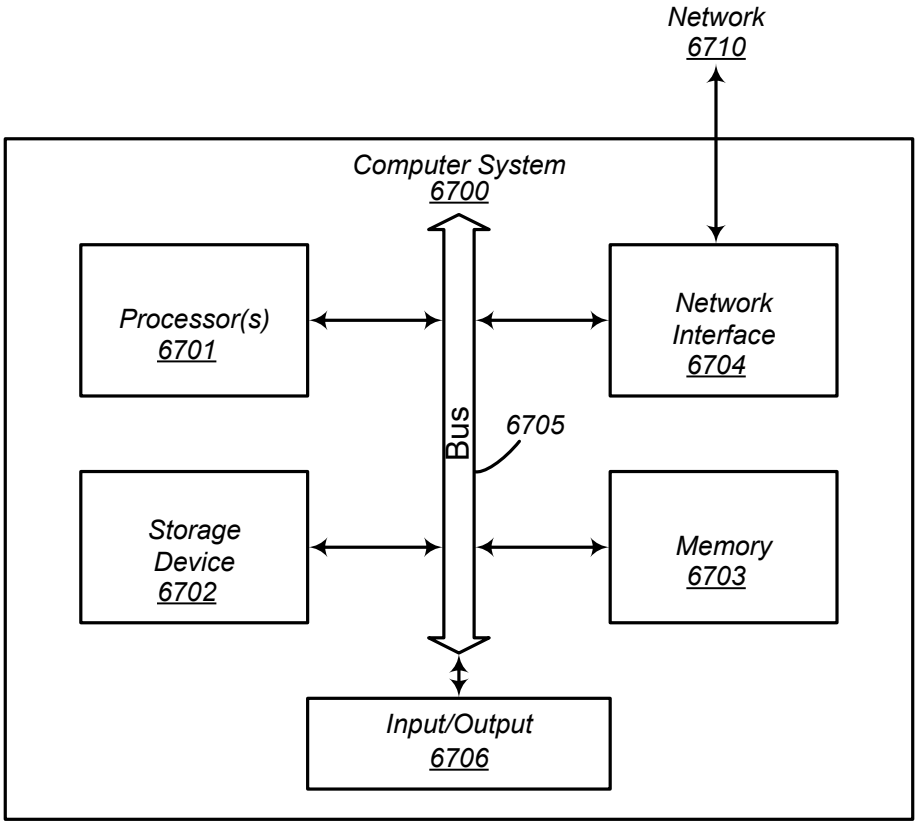
Network
6710
Computer System
6700
Processor(s)
6701
Network
Interface
6704
Bus
6705
Storage
Device
6702
Memory
6703
Input/Output
6706

FIG. 67