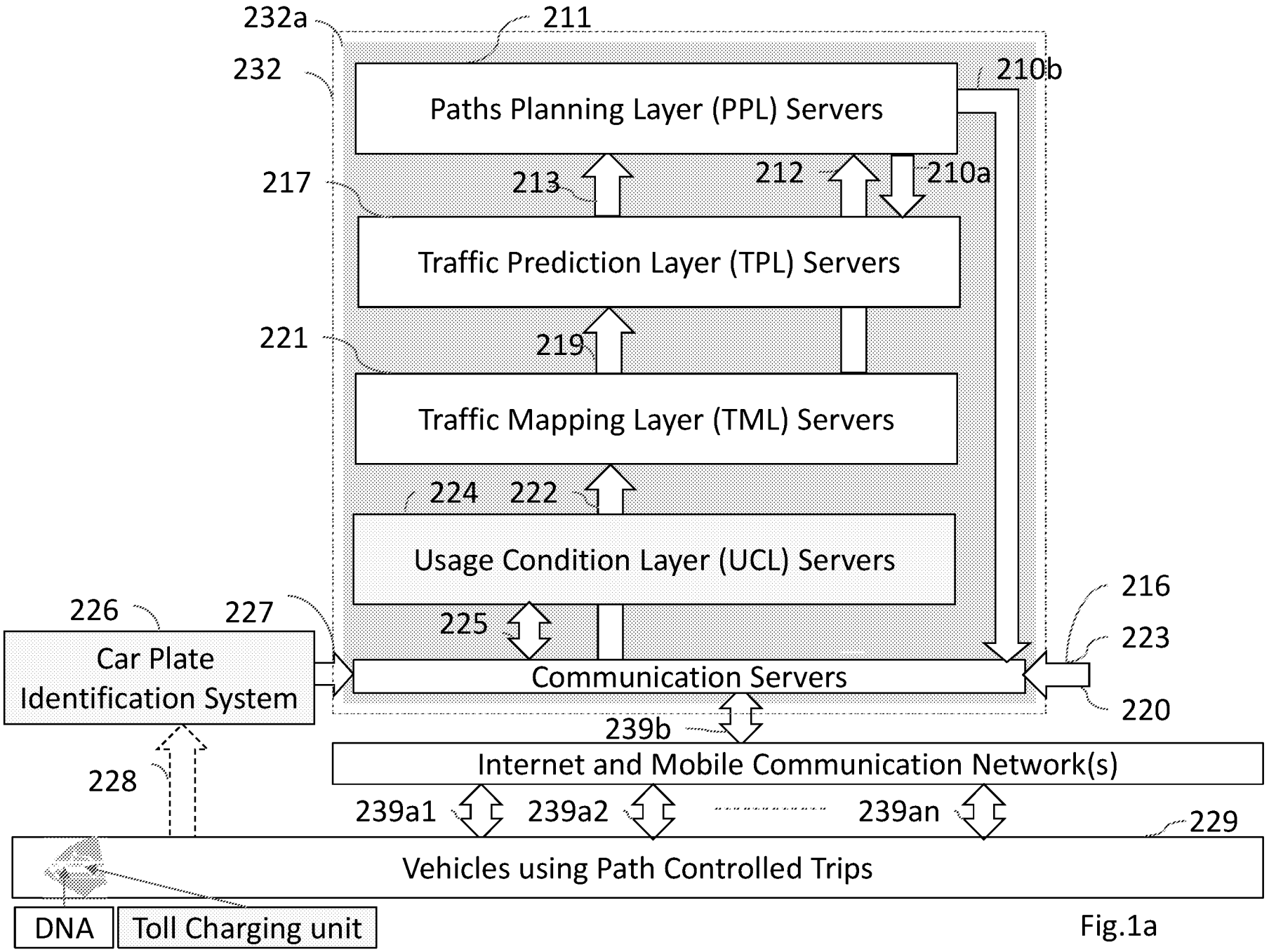
232a
211
232
210b
Paths Planning Layer (PPL) Servers
217
213
212
210a
Traffic Prediction Layer (TPL) Servers
221
219
Traffic Mapping Layer (TML) Servers
224
222
Usage Condition Layer (UCL) Servers
226
227
225
216
223
Car Plate Identification System
Communication Servers
220
239b
Internet and Mobile Communication Network(s)
228
239a1
239a2
239an
229
Vehicles using Path Controlled Trips
DNA
Toll Charging unit

Fig.1a

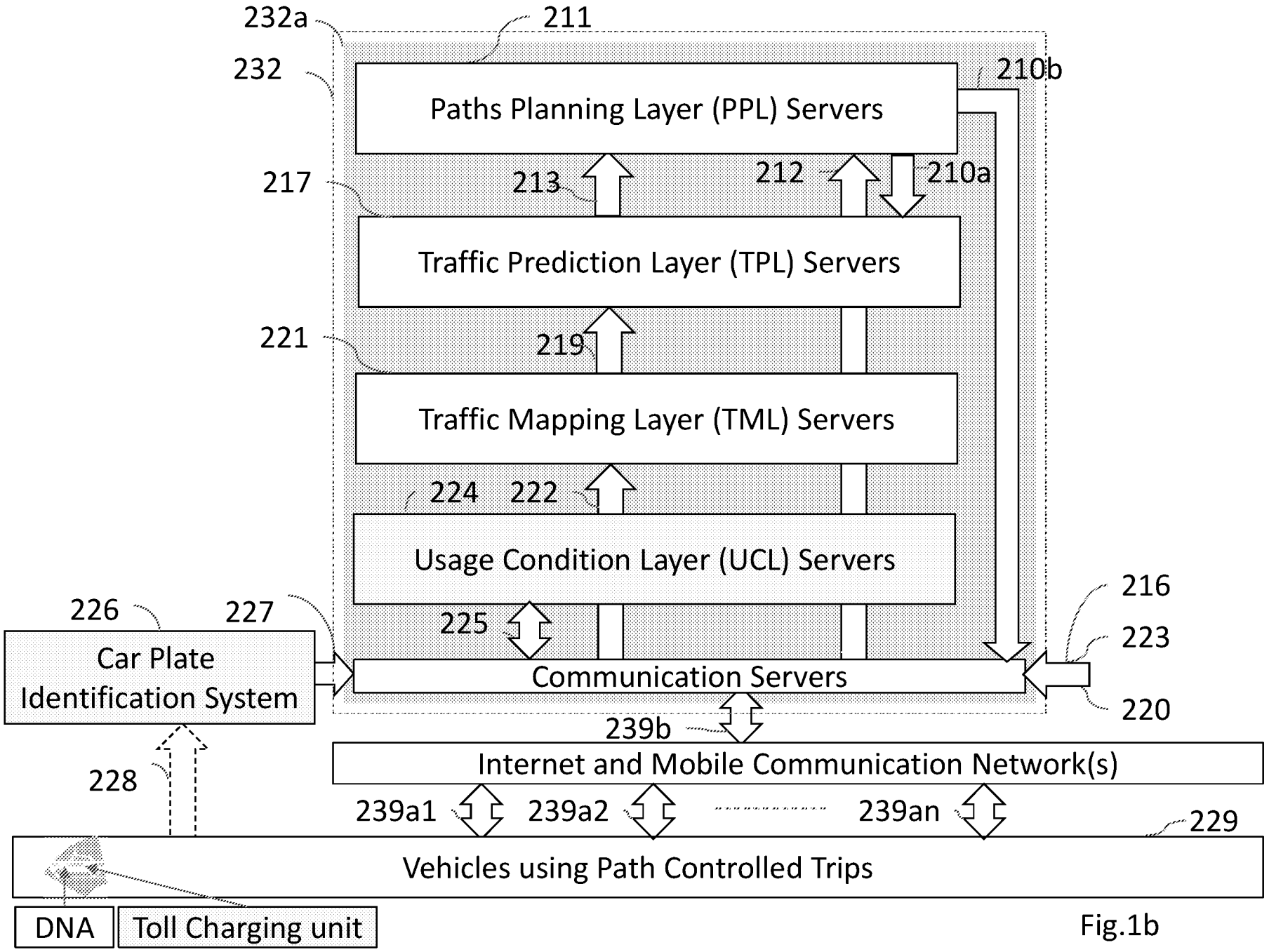
232a
211
232
210b
Paths Planning Layer (PPL) Servers
217
213
212
210a
Traffic Prediction Layer (TPL) Servers
221
219
Traffic Mapping Layer (TML) Servers
224
222
Usage Condition Layer (UCL) Servers
226
227
225
216
223
Car Plate Identification System
Communication Servers
220
239b
Internet and Mobile Communication Network(s)
228
239a1
239a2
239an
229
Vehicles using Path Controlled Trips
DNA
Toll Charging unit

Fig.1b

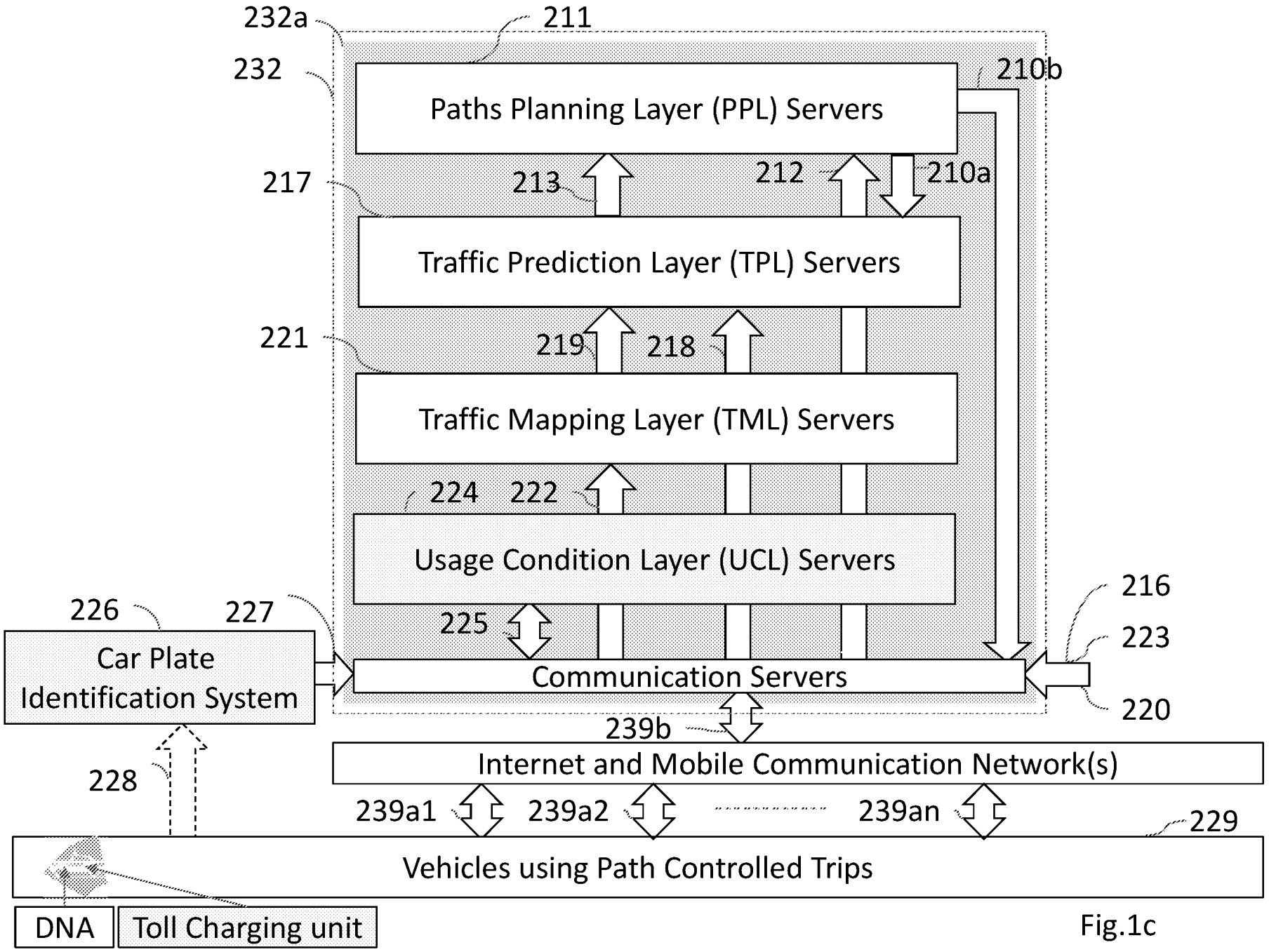
232a
211
232
210b
Paths Planning Layer (PPL) Servers
213
212
210a
217
Traffic Prediction Layer (TPL) Servers
219
218
221
Traffic Mapping Layer (TML) Servers
224
222
Usage Condition Layer (UCL) Servers
226
227
225
216
223
Car Plate Identification System
Communication Servers
220
239b
Internet and Mobile Communication Network(s)
228
239a1
239a2
239an
229
Vehicles using Path Controlled Trips
DNA
Toll Charging unit

Fig.1c

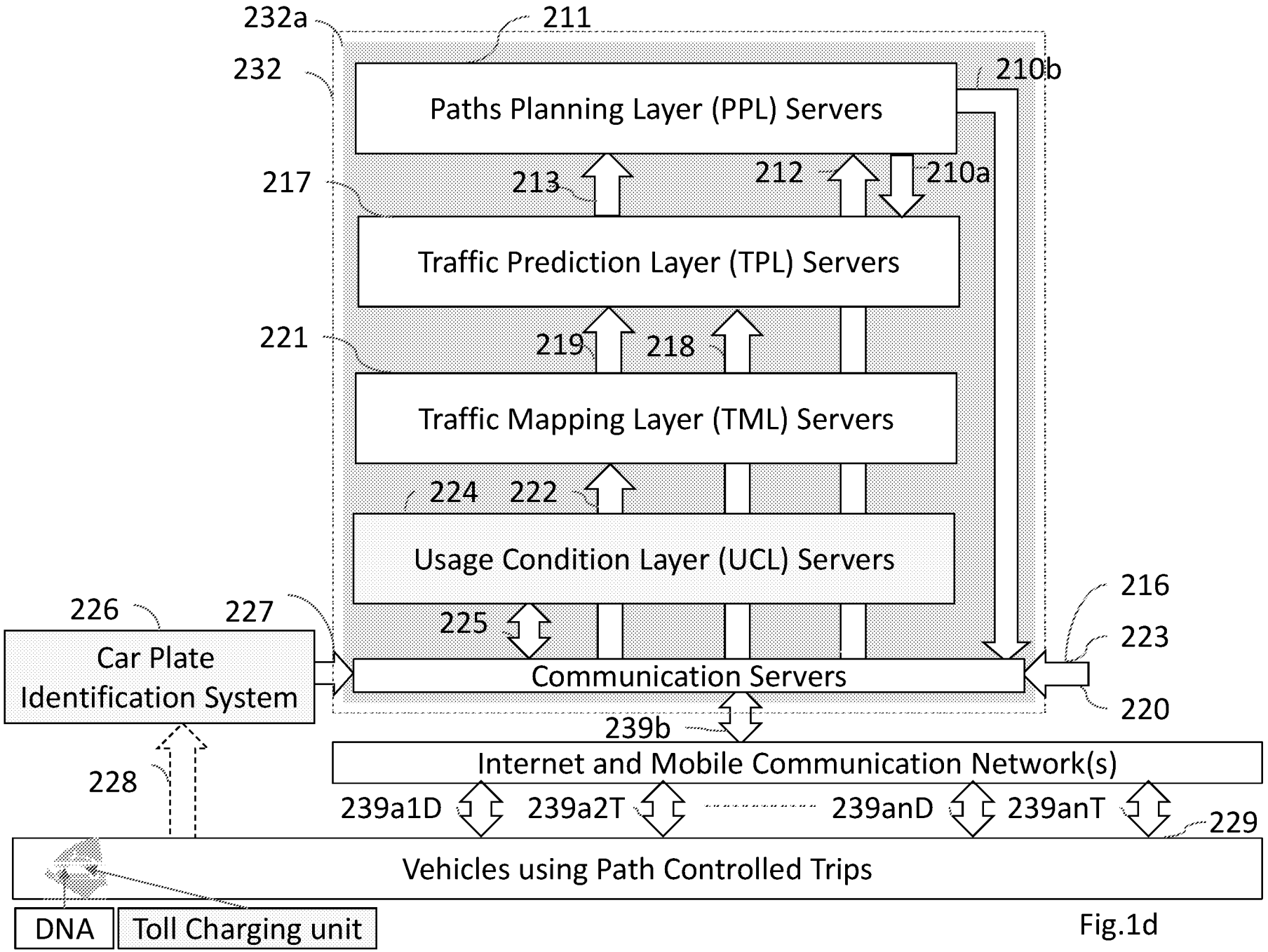
232a
211
232
210b
Paths Planning Layer (PPL) Servers
213
212
210a
217
Traffic Prediction Layer (TPL) Servers
219
218
221
Traffic Mapping Layer (TML) Servers
224
222
Usage Condition Layer (UCL) Servers
226
227
225
216
223
Car Plate Identification System
Communication Servers
220
239b
Internet and Mobile Communication Network(s)
228
239a1D
239a2T
239anD
239anT
229
Vehicles using Path Controlled Trips
DNA
Toll Charging unit

Fig.1d

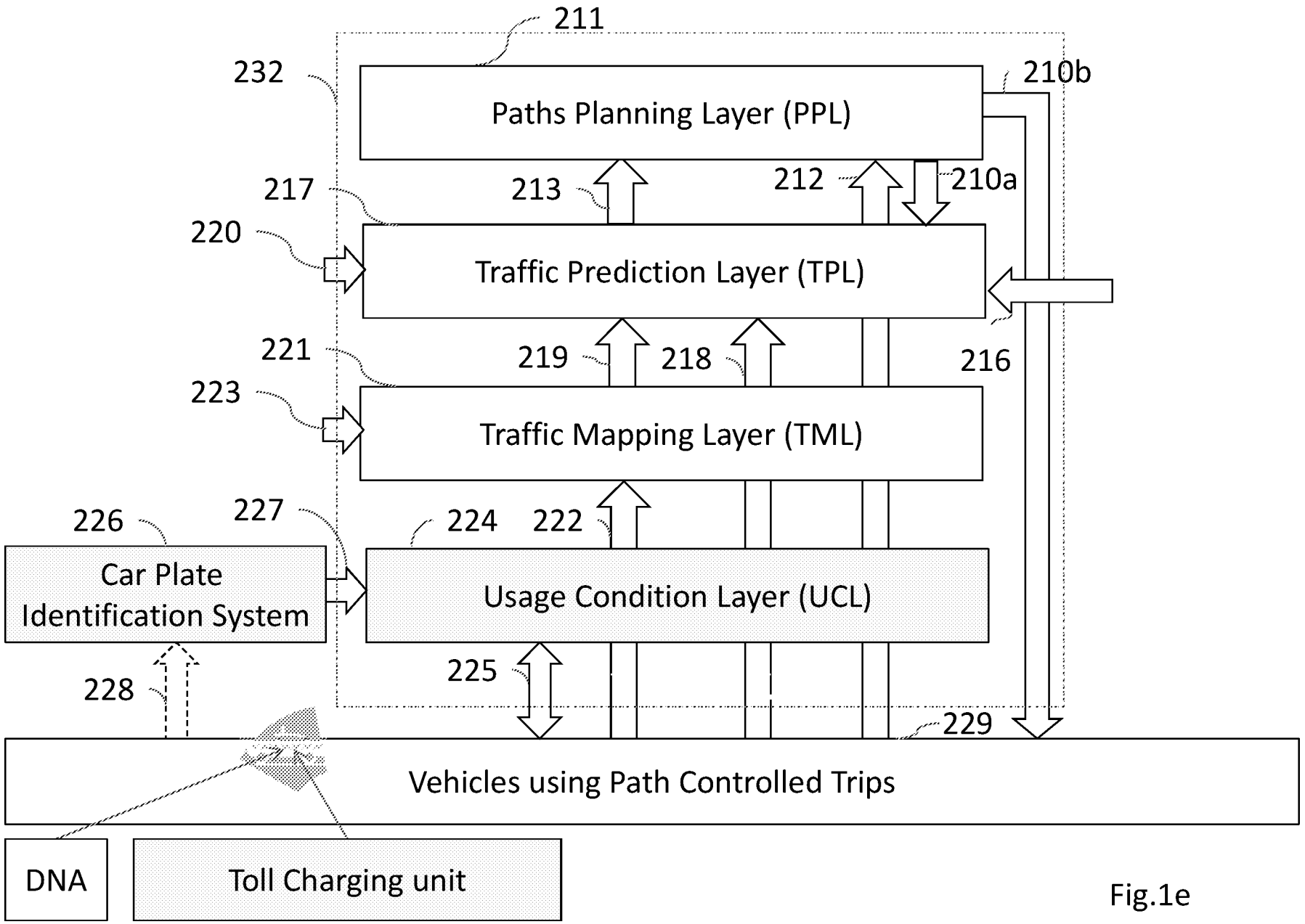
211
232
Paths Planning Layer (PPL)
210b
213
212
210a
217
220
Traffic Prediction Layer (TPL)
219
218
216
221
223
Traffic Mapping Layer (TML)
226
227
224
222
Car Plate Identification System
Usage Condition Layer (UCL)
225
228
229
Vehicles using Path Controlled Trips
DNA
Toll Charging unit

Fig.1e

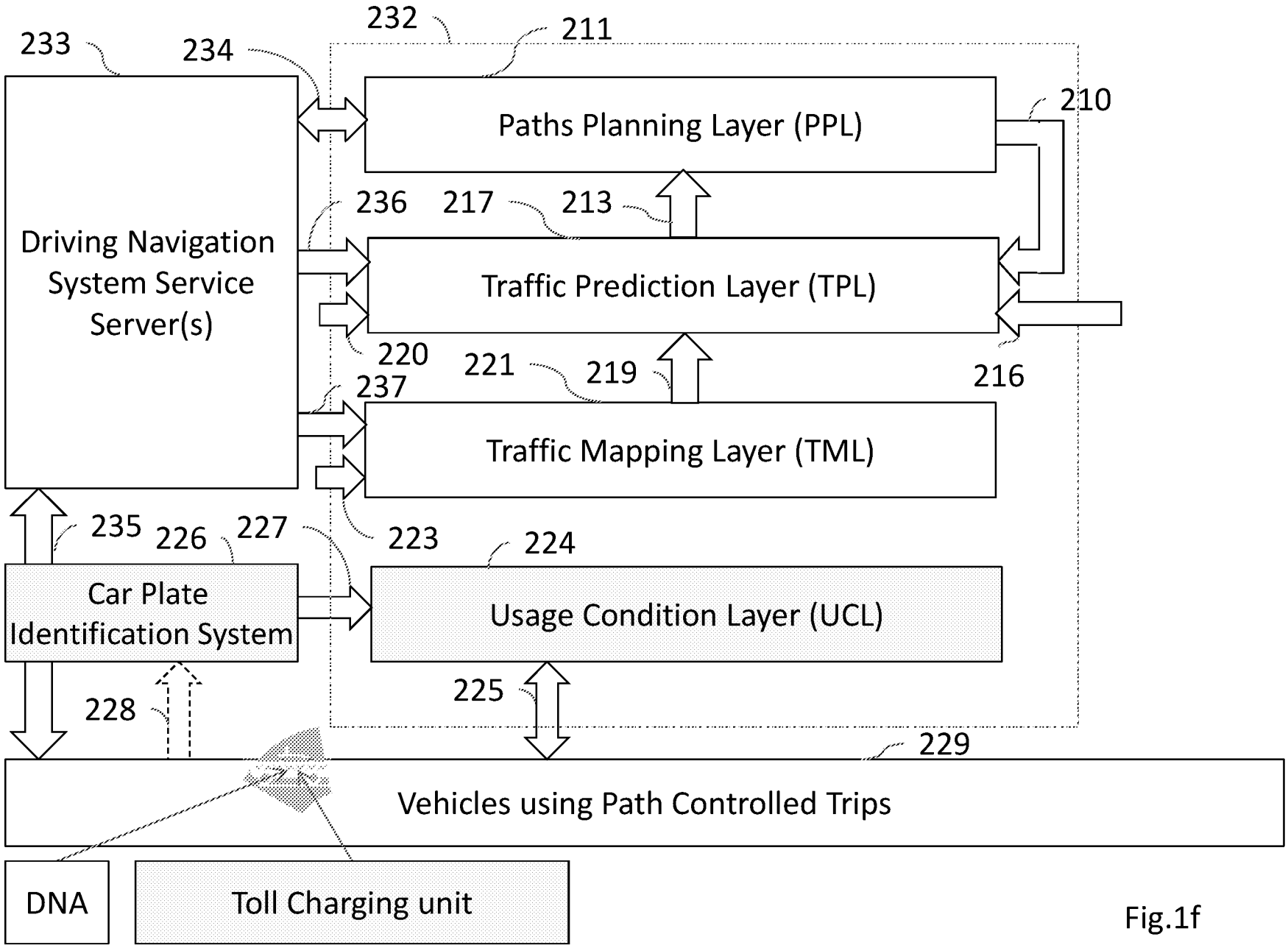
232
211
233
234
210
Paths Planning Layer (PPL)
236
217
213
Driving Navigation System Service Server(s)
Traffic Prediction Layer (TPL)
220
221
219
216
237
Traffic Mapping Layer (TML)
235
226
227
223
224
Car Plate Identification System
Usage Condition Layer (UCL)
225
228
229
Vehicles using Path Controlled Trips
DNA
Toll Charging unit

Fig.1f

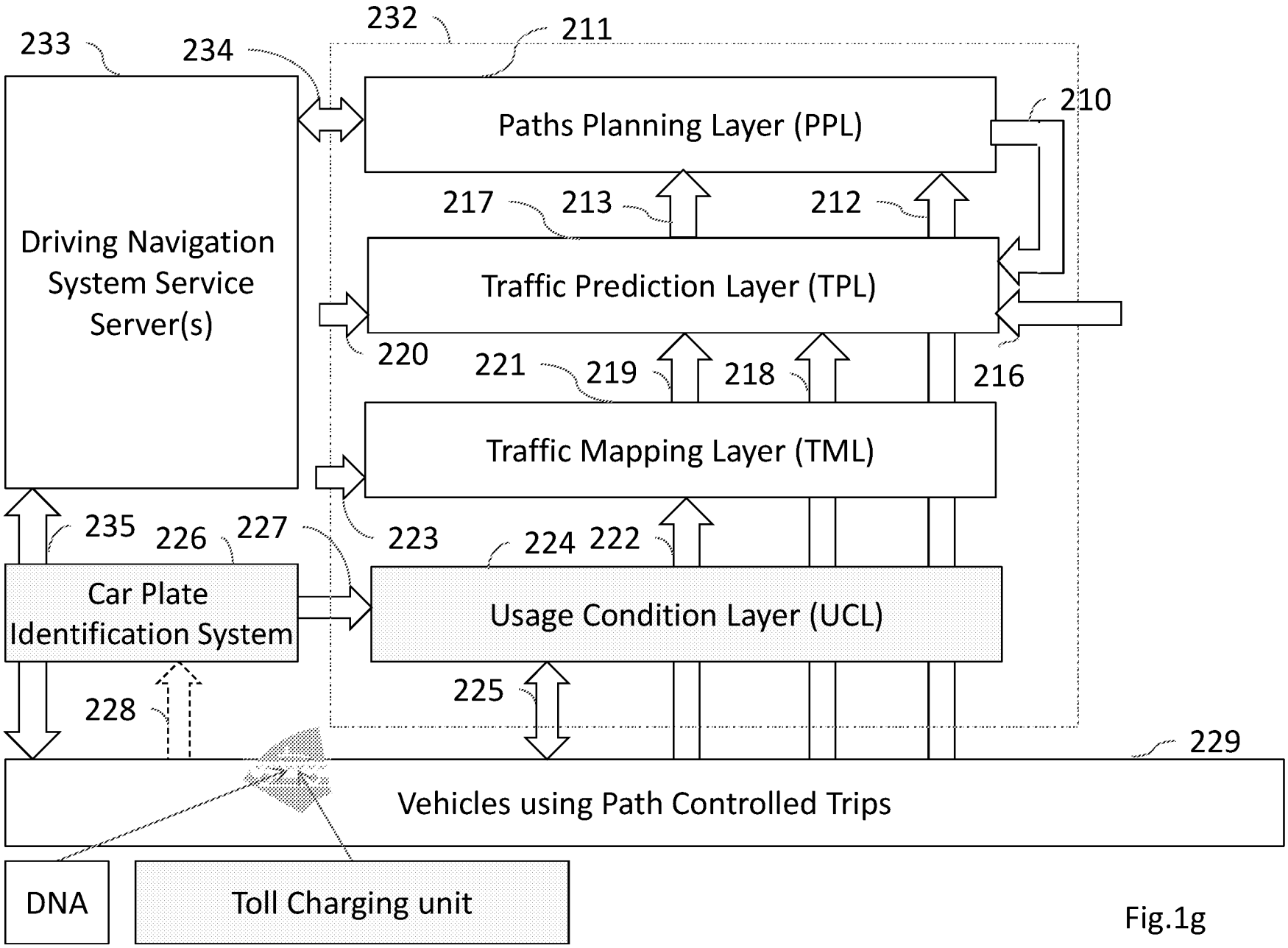
232
211
233
234
210
Paths Planning Layer (PPL)
217
213
212
Driving Navigation System Service Server(s)
Traffic Prediction Layer (TPL)
220
221
219
218
216
Traffic Mapping Layer (TML)
235
226
227
223
224
222
Car Plate Identification System
Usage Condition Layer (UCL)
225
228
229
Vehicles using Path Controlled Trips
DNA
Toll Charging unit

Fig.1g

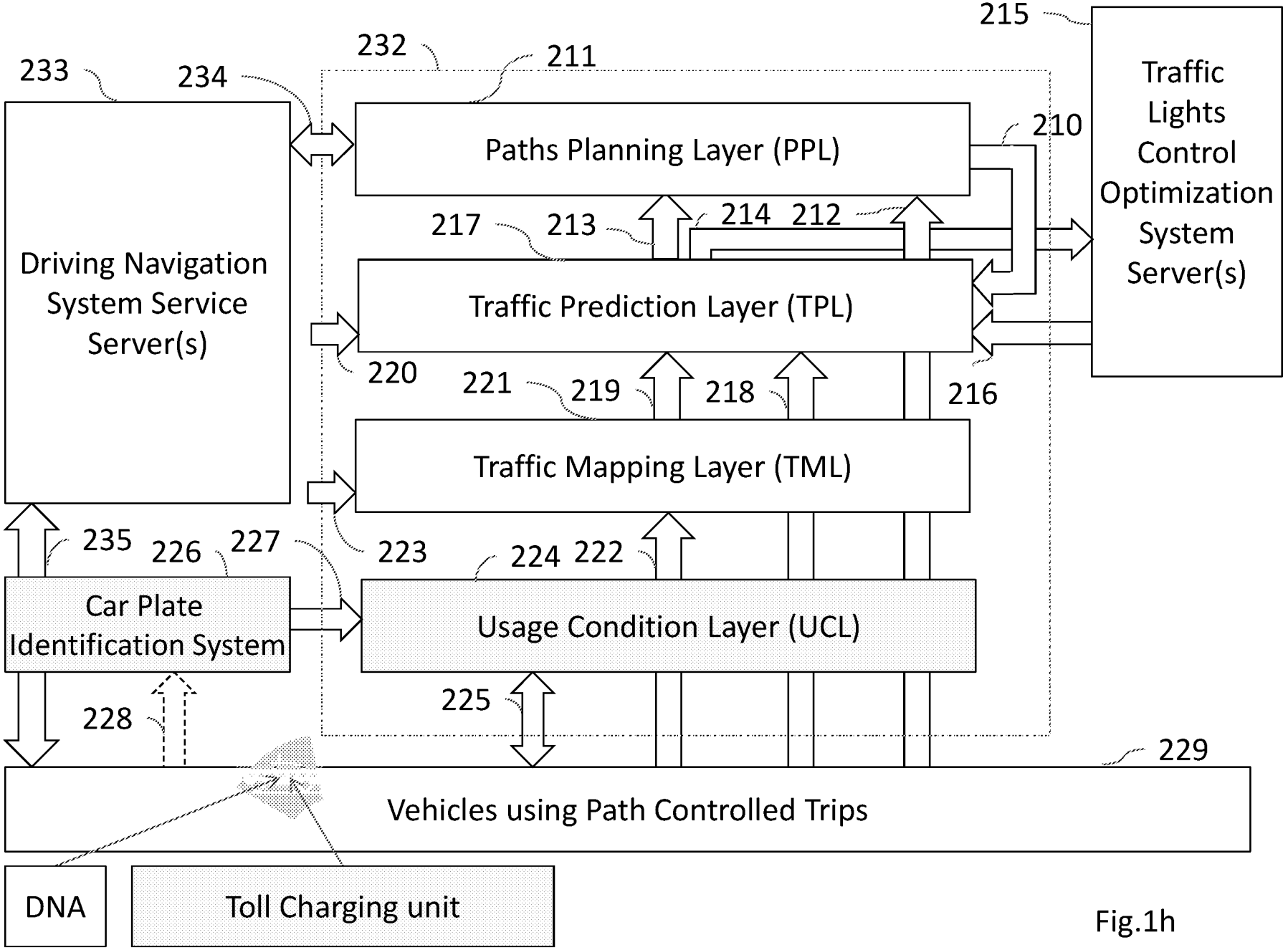
215
Traffic Lights Control Optimization System Server(s)
232
211
233
234
Paths Planning Layer (PPL)
210
Driving Navigation System Service Server(s)
217
213
214
212
Traffic Prediction Layer (TPL)
220
221
219
218
216
Traffic Mapping Layer (TML)
235
226
227
223
224
222
Car Plate Identification System
Usage Condition Layer (UCL)
225
228
229
Vehicles using Path Controlled Trips
DNA
Toll Charging unit

Fig.1h

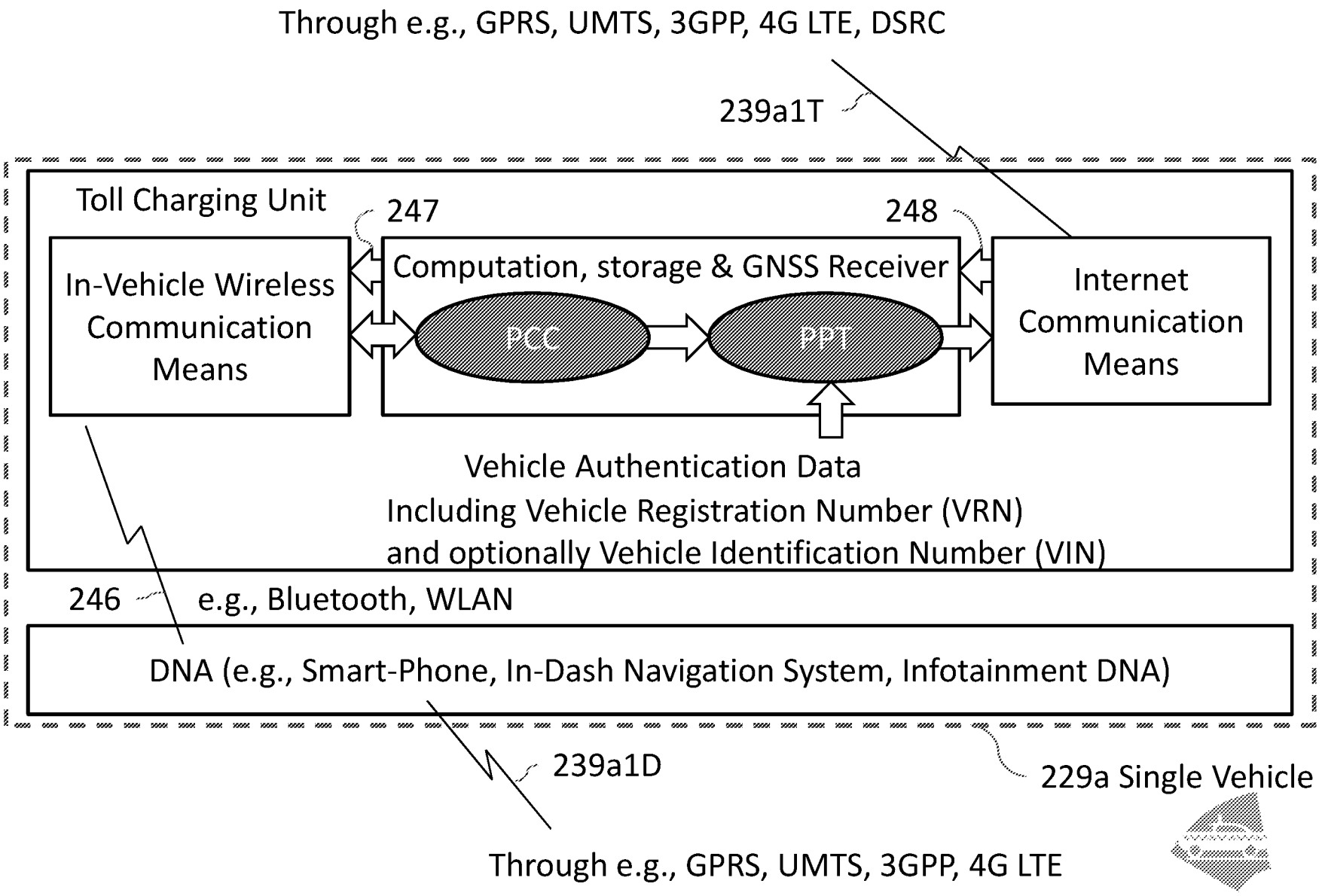
Through e.g., GPRS, UMTS, 3GPP, 4G LTE, DSRC
239a1T
Toll Charging Unit
247
248
In-Vehicle Wireless Communication Means
Computation, storage & GNSS Receiver
PCC
PPT
Internet Communication Means
Vehicle Authentication Data
Including Vehicle Registration Number (VRN)
and optionally Vehicle Identification Number (VIN)
246
e.g., Bluetooth, WLAN
DNA (e.g., Smart-Phone, In-Dash Navigation System, Infotainment DNA)
239a1D
229a Single Vehicle
Through e.g., GPRS, UMTS, 3GPP, 4G LTE

Fig.1i1

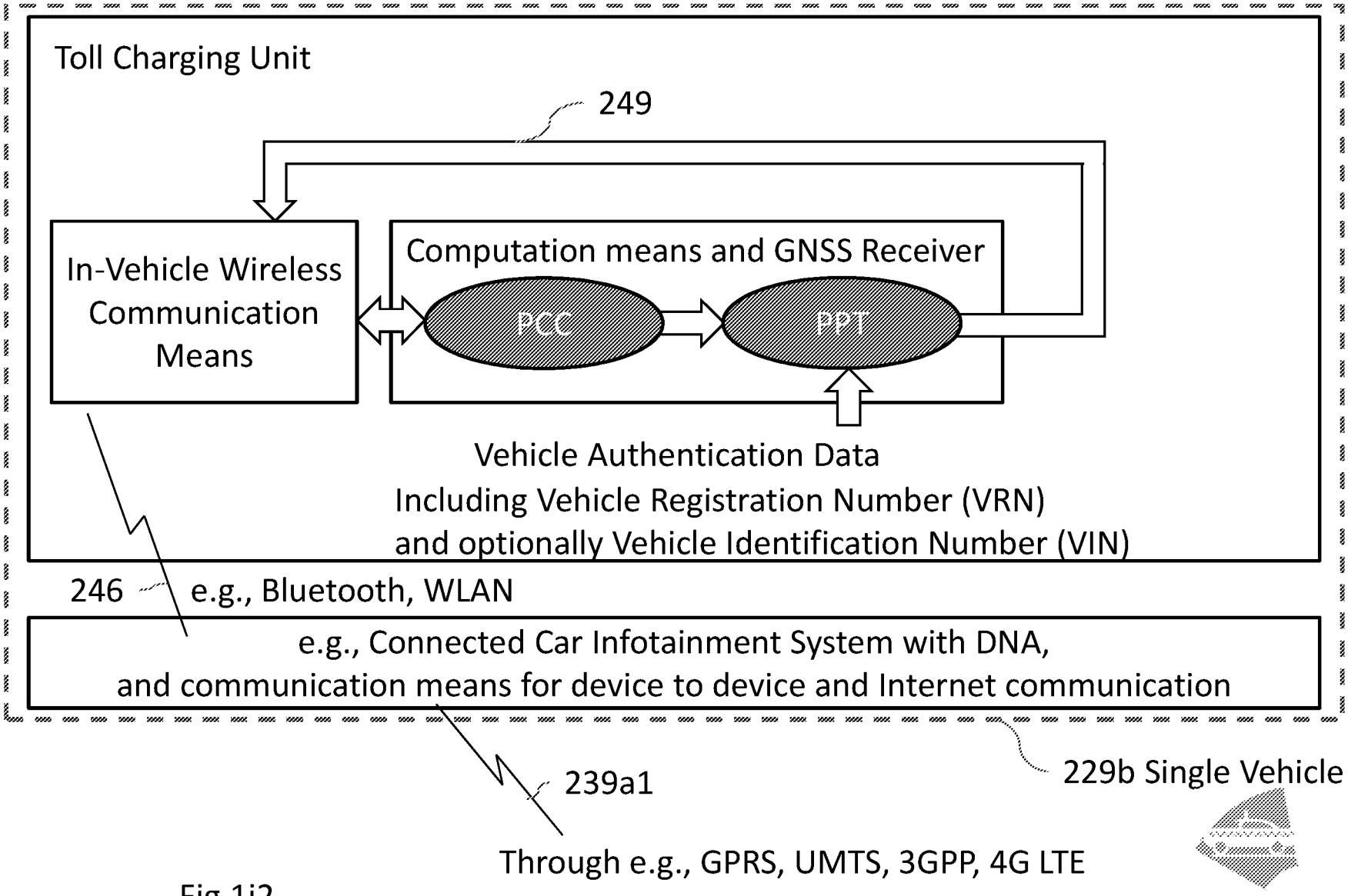
Toll Charging Unit
249
In-Vehicle Wireless Communication Means
Computation means and GNSS Receiver
PCC
PPT
Vehicle Authentication Data
Including Vehicle Registration Number (VRN)
and optionally Vehicle Identification Number (VIN)
246
e.g., Bluetooth, WLAN
e.g., Connected Car Infotainment System with DNA,
and communication means for device to device and Internet communication
239a1
Through e.g., GPRS, UMTS, 3GPP, 4G LTE
229b Single Vehicle

Fig.1i2

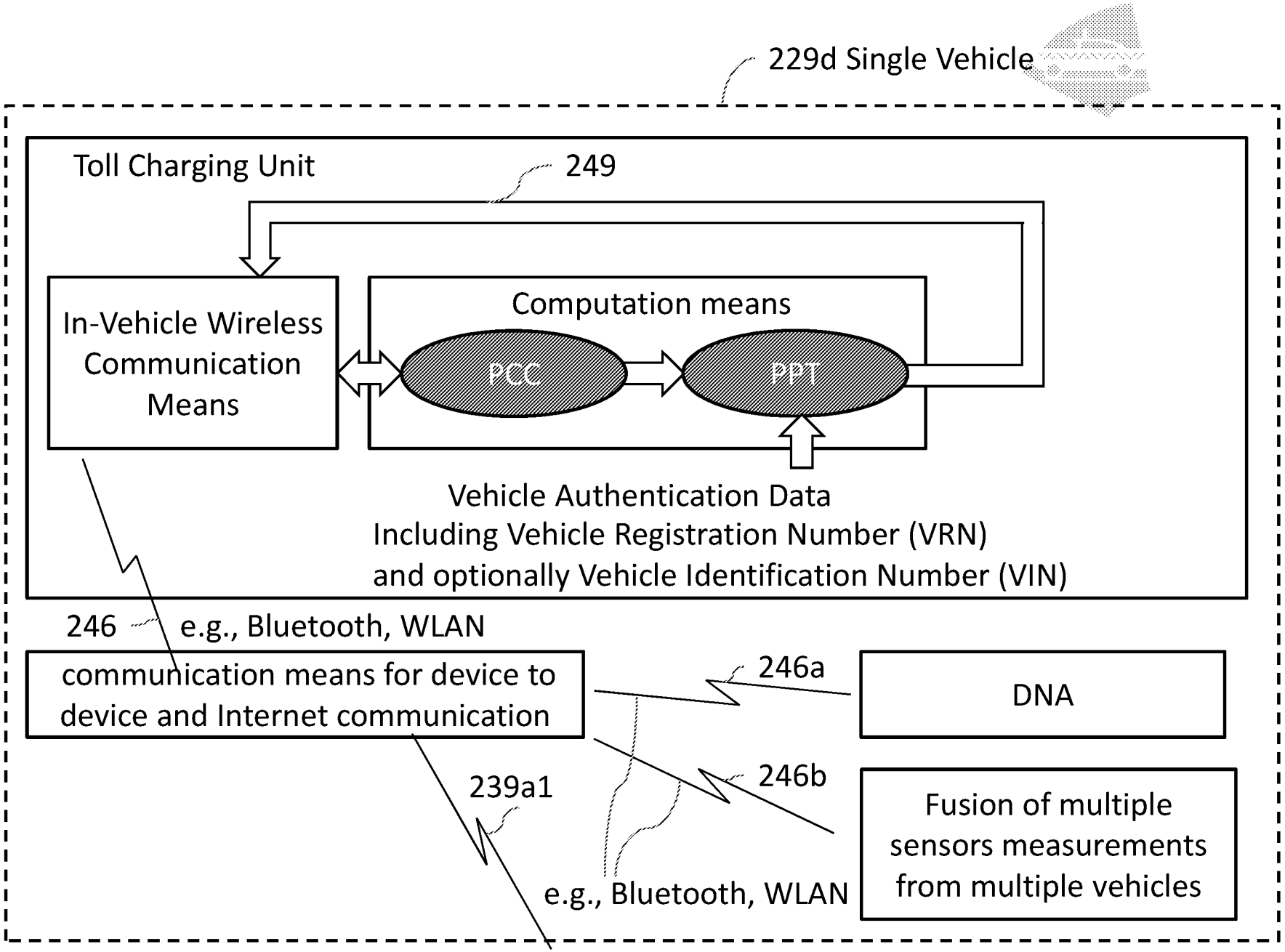
229d Single Vehicle
Toll Charging Unit
249
In-Vehicle Wireless Communication Means
Computation means
PCC
PPT
Vehicle Authentication Data
Including Vehicle Registration Number (VRN)
and optionally Vehicle Identification Number (VIN)
246
e.g., Bluetooth, WLAN
communication means for device to device and Internet communication
246a
DNA
246b
239a1
Fusion of multiple sensors measurements from multiple vehicles
e.g., Bluetooth, WLAN
e.g., GPRS, UMTS, 3GPP, 4G LTE

Fig.1i3

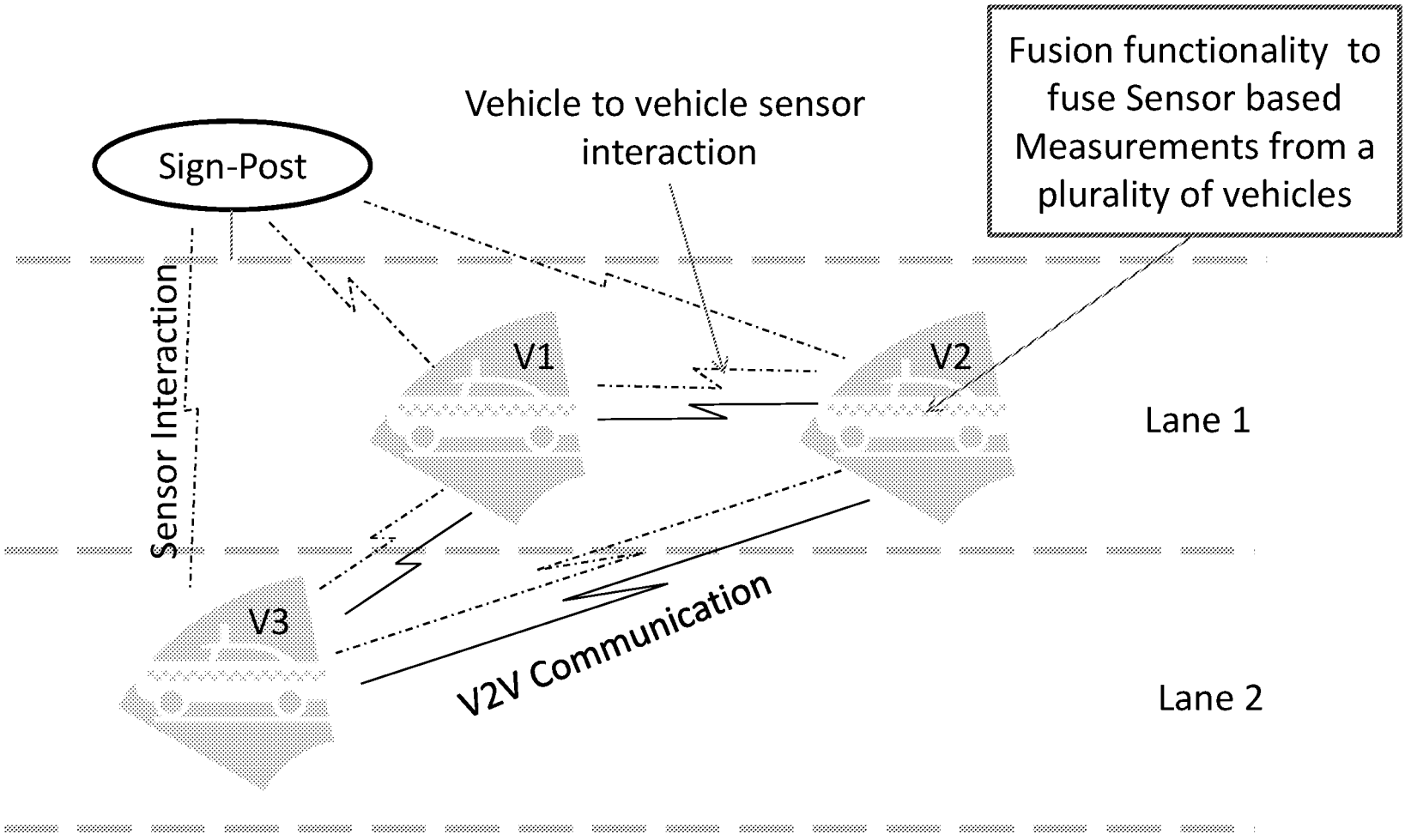
Fusion functionality to fuse Sensor based Measurements from a plurality of vehicles
Vehicle to vehicle sensor interaction
Sign-Post
Sensor Interaction
V1
V2
V3
Lane 1
Lane 2
V2V Communication

Fig.1i3a

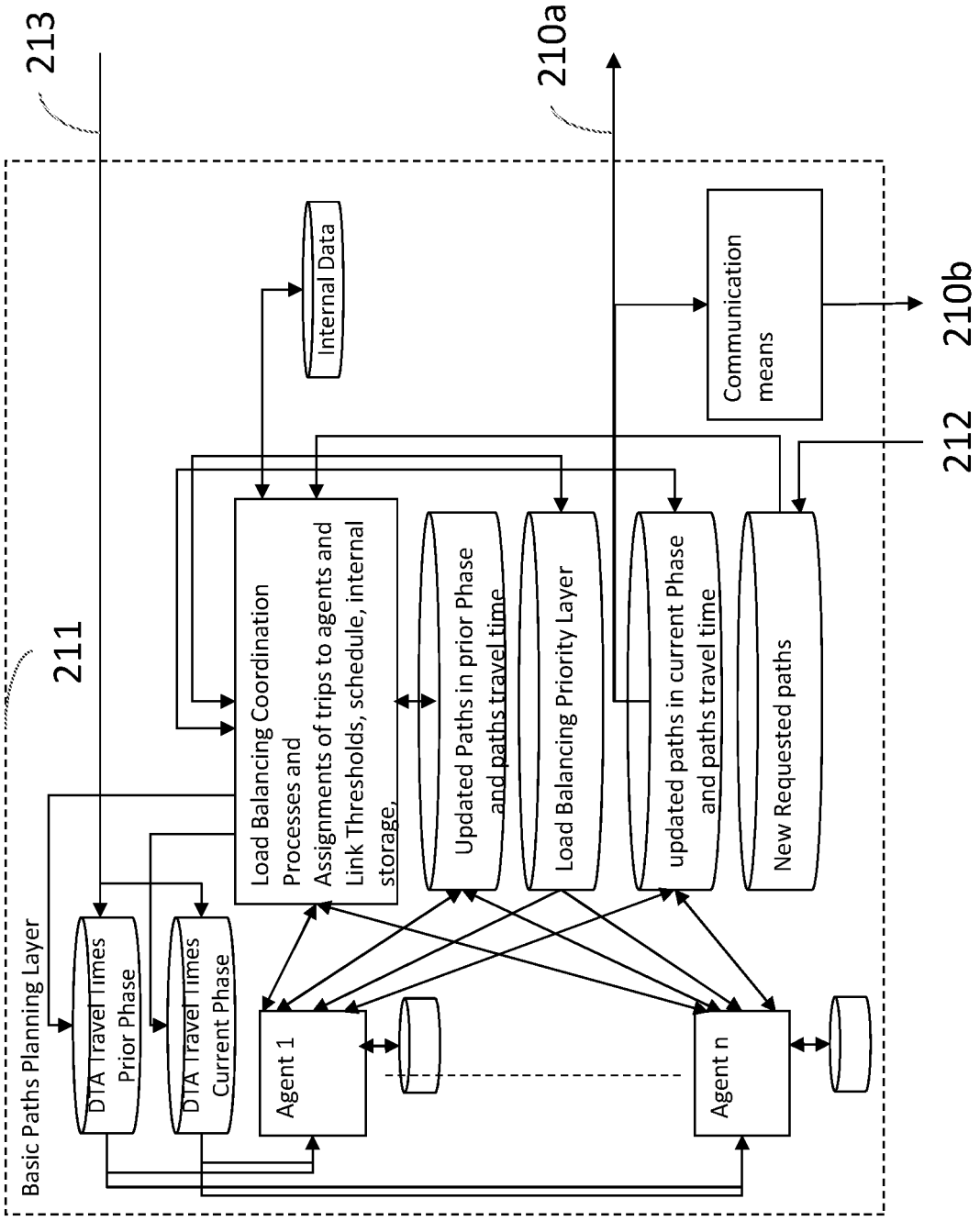
213
210a
211
Basic Paths Planning Layer
DTA Travel Times Prior Phase
DTA Travel Times Current Phase
Load Balancing Coordination Processes and Assignments of trips to agents and Link Thresholds, schedule, internal storage,
Internal Data
Updated Paths in prior Phase and paths travel time
Load Balancing Priority Layer
updated paths in current Phase and paths travel time
New Requested paths
Communication means
212
210b
Agent 1
Agent n

Fig.1j1

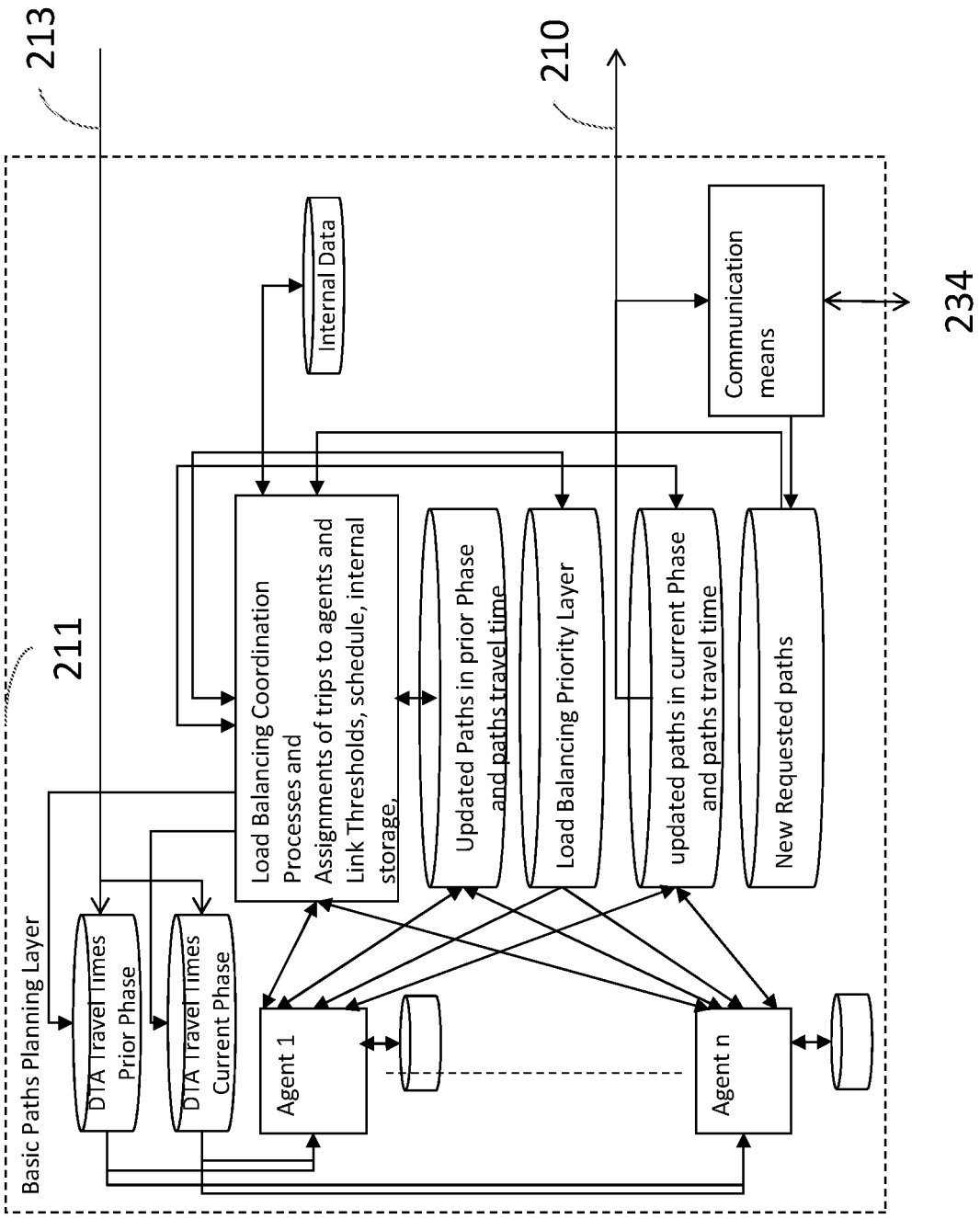
213
210
211
234
Basic Paths Planning Layer
DTA Travel Times Prior Phase
DTA Travel Times Current Phase
Load Balancing Coordination Processes and Assignments of trips to agents and Link Thresholds, schedule, internal storage,
Internal Data
Updated Paths in prior Phase and paths travel time
Load Balancing Priority Layer
updated paths in current Phase and paths travel time
New Requested paths
Communication means
Agent 1
Agent n

Fig.1j2

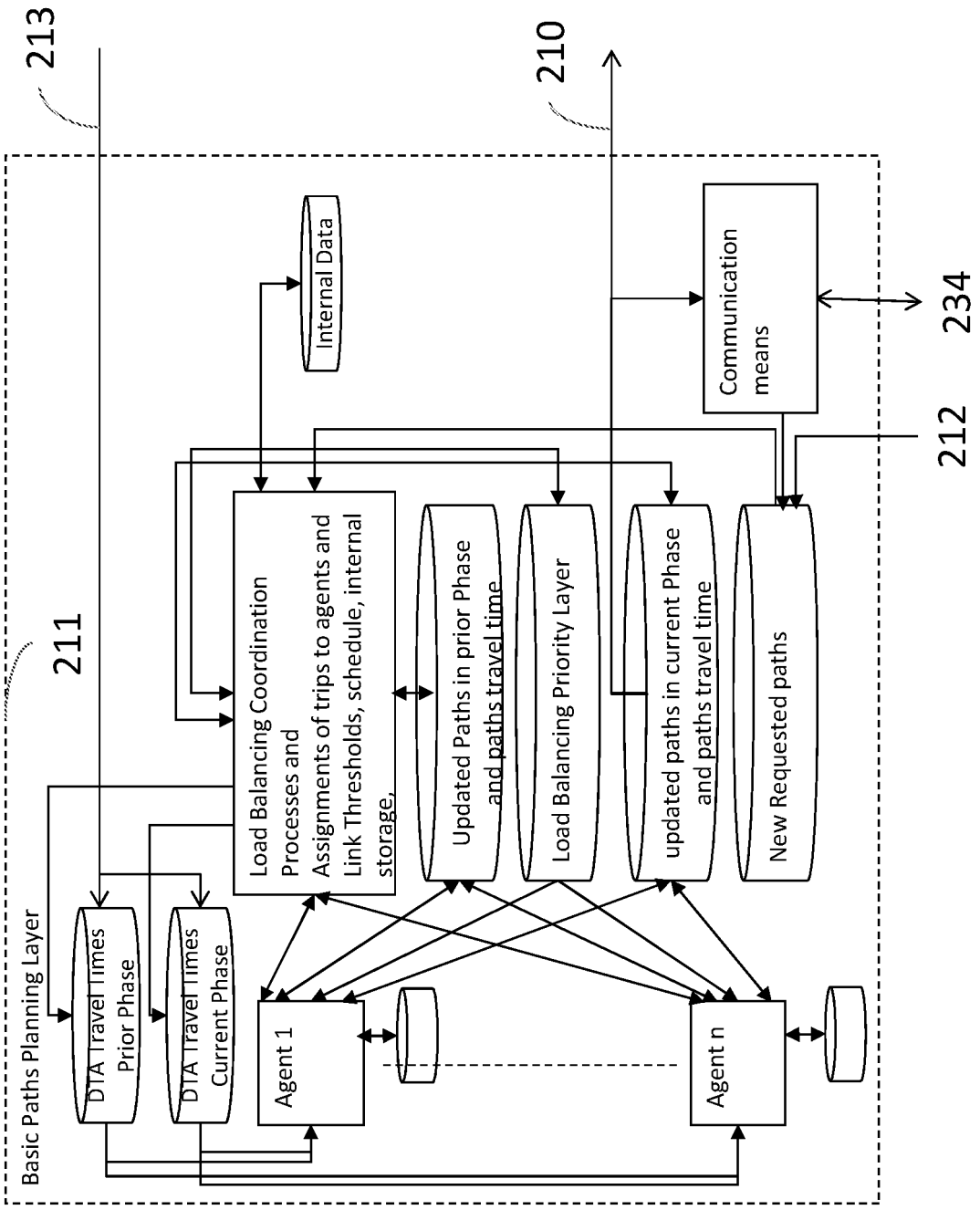
213
210
211
212
234
Basic Paths Planning Layer
DTA Travel Times Prior Phase
DTA Travel Times Current Phase
Load Balancing Coordination Processes and Assignments of trips to agents and Link Thresholds, schedule, internal storage,
Internal Data
Updated Paths in prior Phase and paths travel time
Load Balancing Priority Layer
updated paths in current Phase and paths travel time
New Requested paths
Communication means
Agent 1
Agent n

Fig.1j3

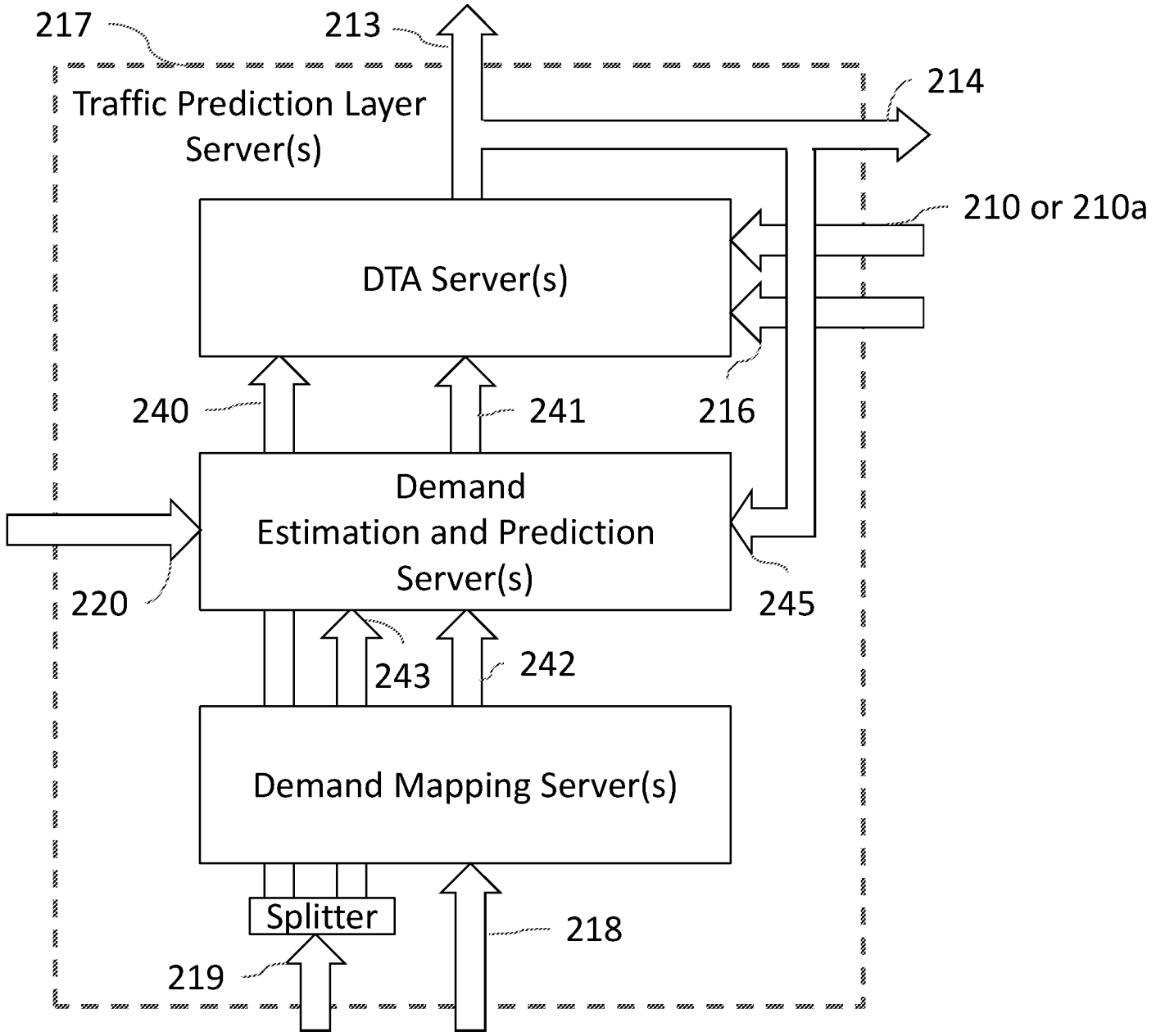
217
213
214
Traffic Prediction Layer Server(s)
210 or 210a
DTA Server(s)
240
241
216
Demand Estimation and Prediction Server(s)
220
245
243
242
Demand Mapping Server(s)
Splitter
218
219

Fig.1j4

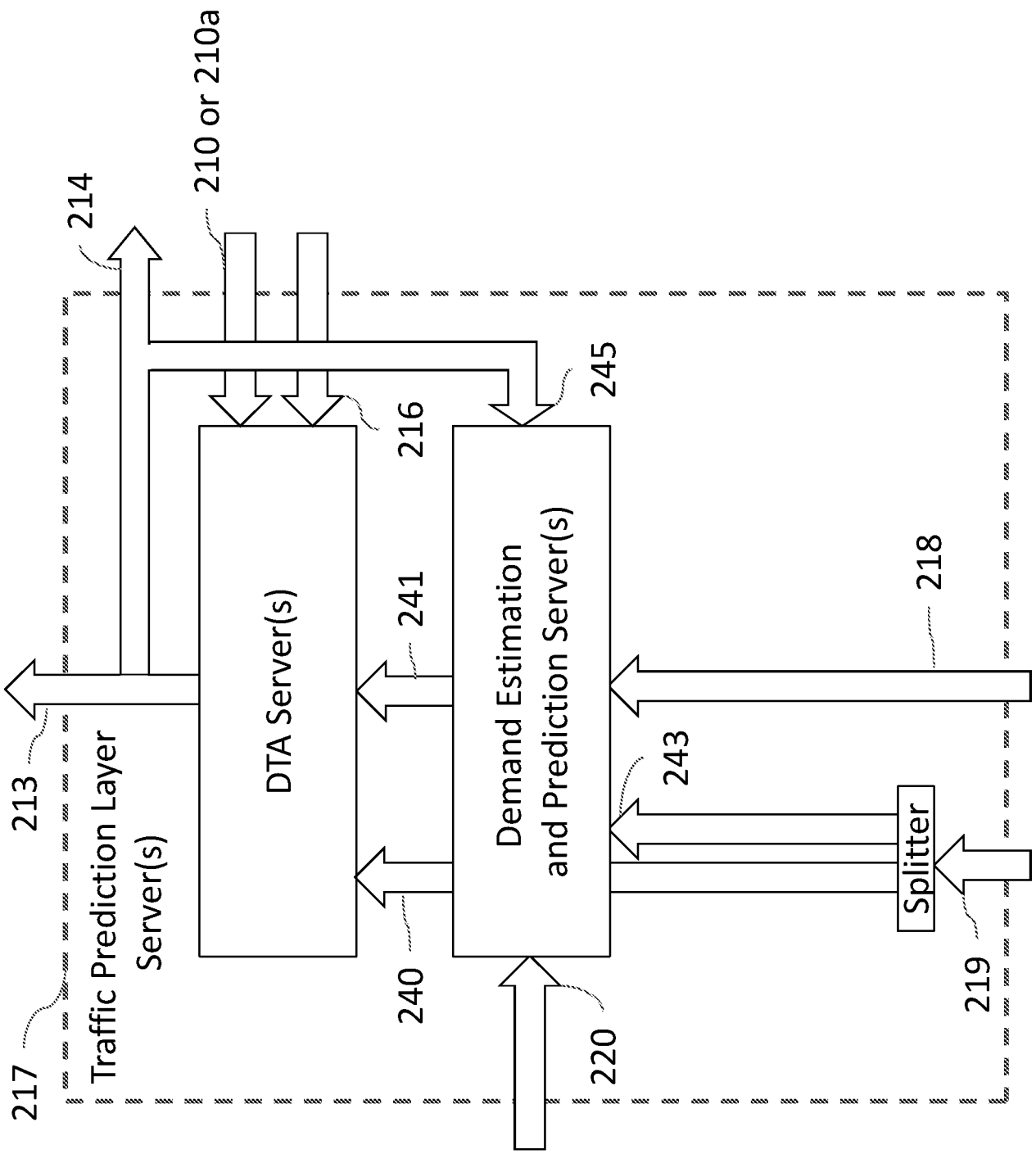
210 or 210a
214
216
245
DTA Server(s)
241
Demand Estimation
and Prediction Server(s)
218
213
Traffic Prediction Layer
Server(s)
243
Splitter
240
220
219
217

Fig.1j5

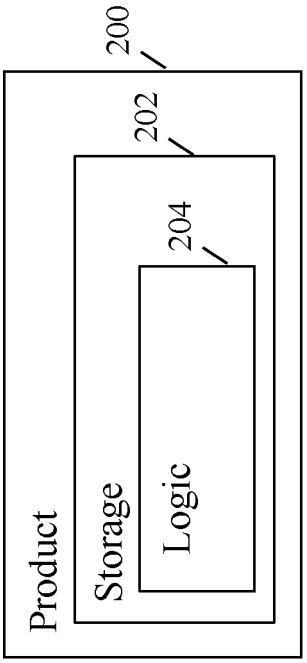

Fig. 2

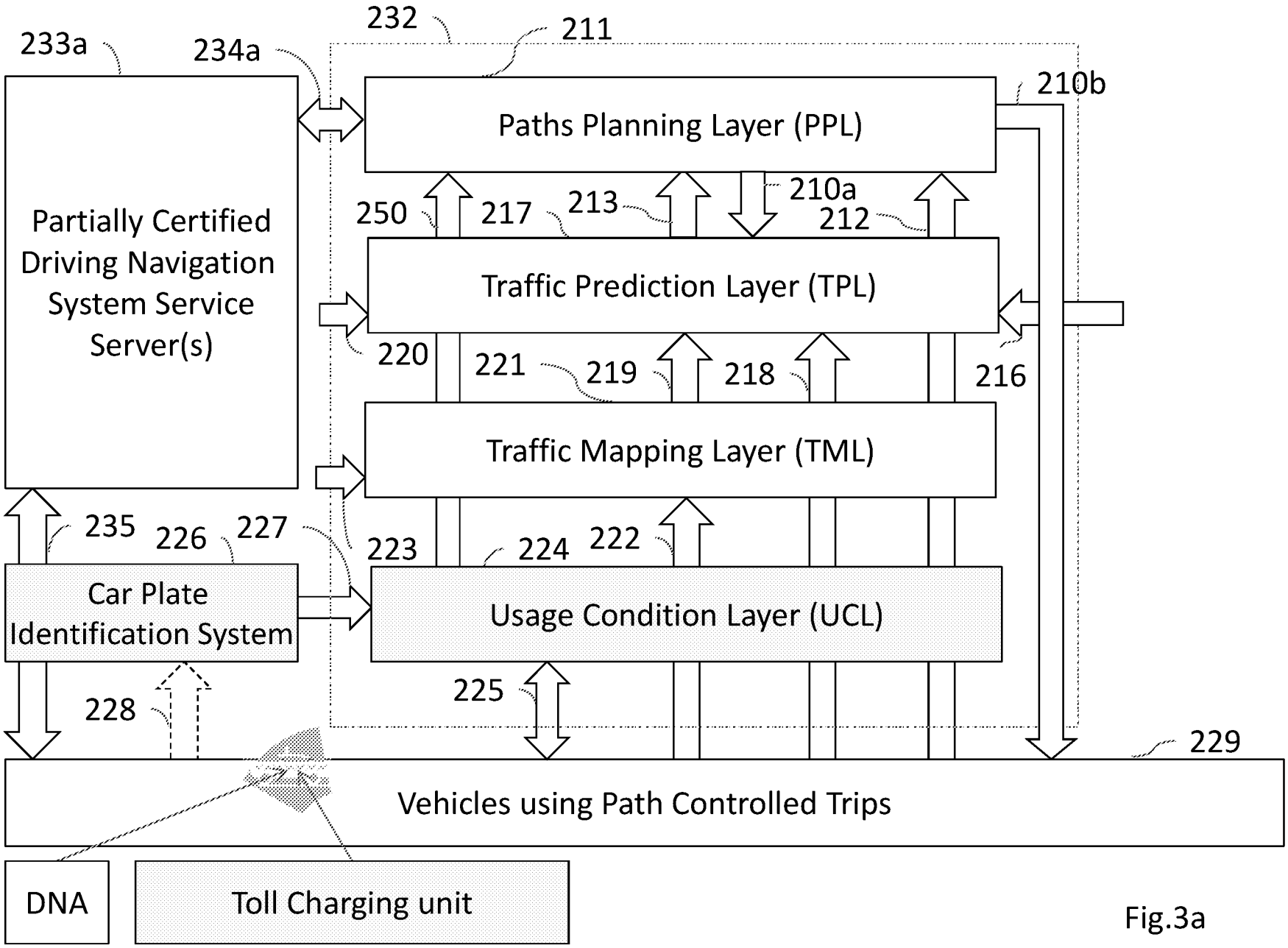
232
211
233a
234a
210b
Paths Planning Layer (PPL)
Partially Certified Driving Navigation System Service Server(s)
250
217
213
210a
212
Traffic Prediction Layer (TPL)
220
221
219
218
216
Traffic Mapping Layer (TML)
235
226
227
223
224
222
Car Plate Identification System
Usage Condition Layer (UCL)
228
225
229
Vehicles using Path Controlled Trips
DNA
Toll Charging unit

Fig.3a

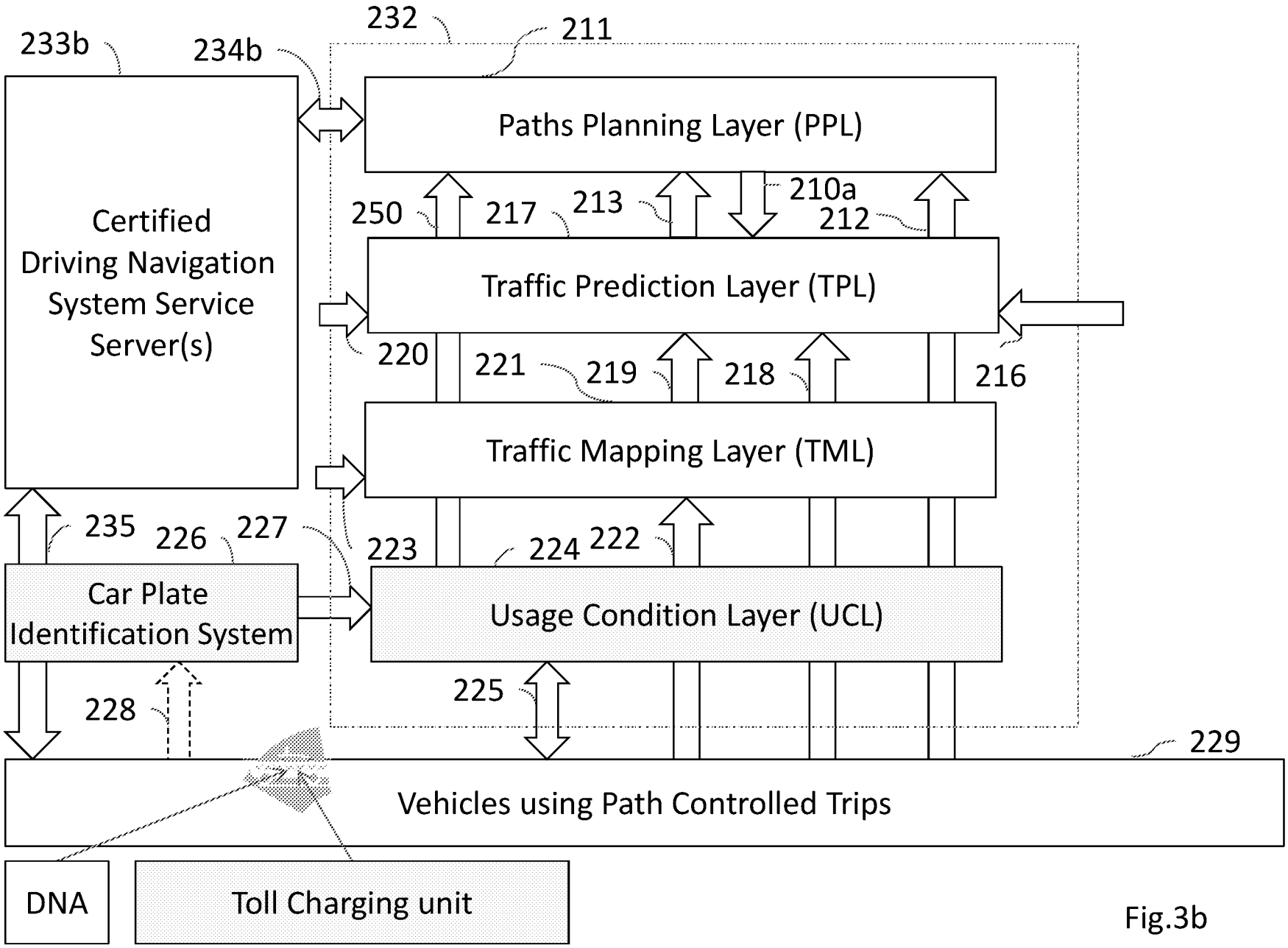
232
211
233b
234b
Paths Planning Layer (PPL)
Certified Driving Navigation System Service Server(s)
250
217
213
210a
212
Traffic Prediction Layer (TPL)
220
221
219
218
216
Traffic Mapping Layer (TML)
235
226
227
223
224
222
Car Plate Identification System
Usage Condition Layer (UCL)
228
225
229
Vehicles using Path Controlled Trips
DNA
Toll Charging unit

Fig.3b

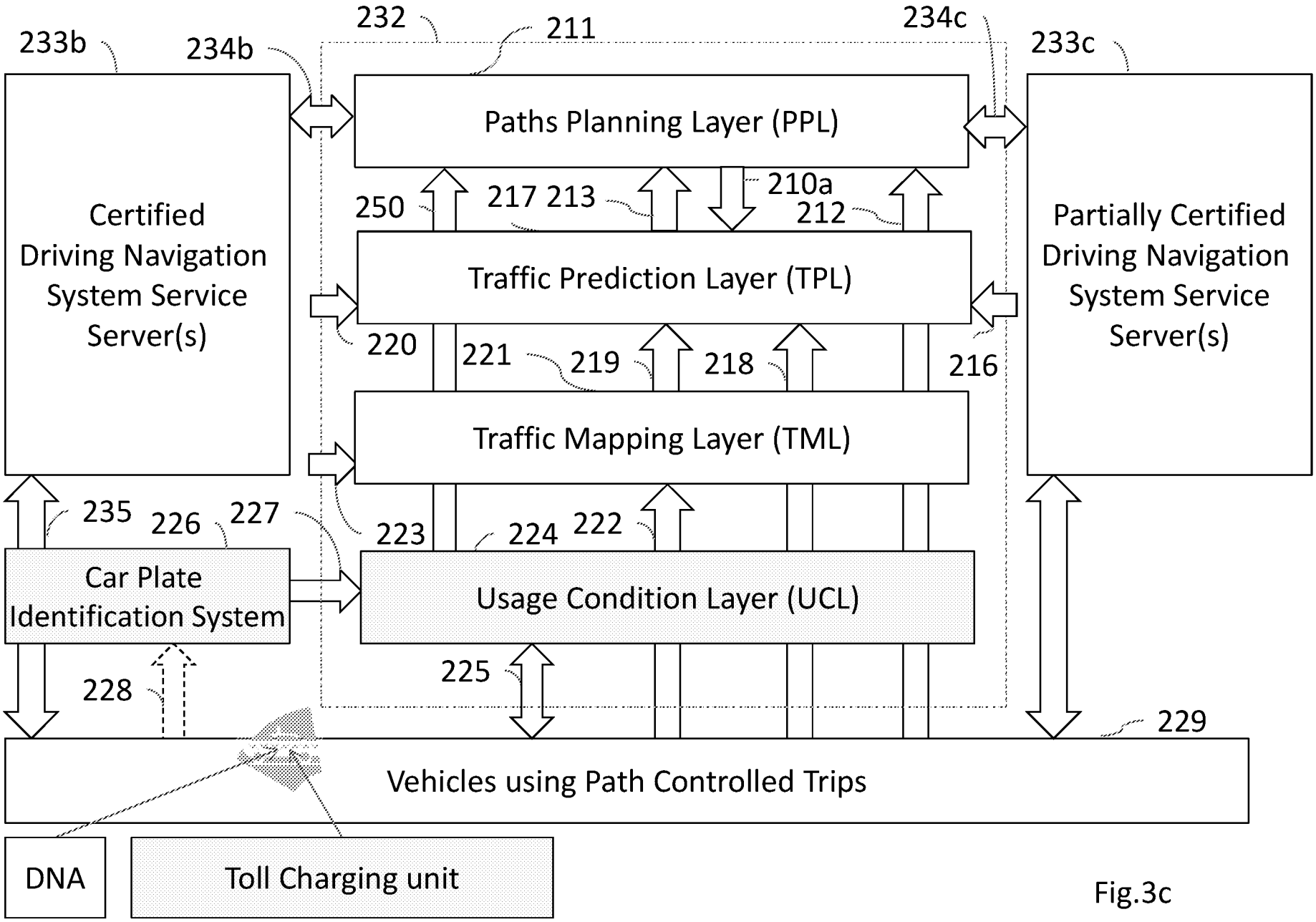
233b
234b
232
211
234c
233c
Paths Planning Layer (PPL)
Certified Driving Navigation System Service Server(s)
Partially Certified Driving Navigation System Service Server(s)
250
217 213
210a
212
Traffic Prediction Layer (TPL)
220
221
219
218
216
Traffic Mapping Layer (TML)
235
226
227
223
224
222
Car Plate Identification System
Usage Condition Layer (UCL)
225
228
229
Vehicles using Path Controlled Trips
DNA
Toll Charging unit

Fig.3c

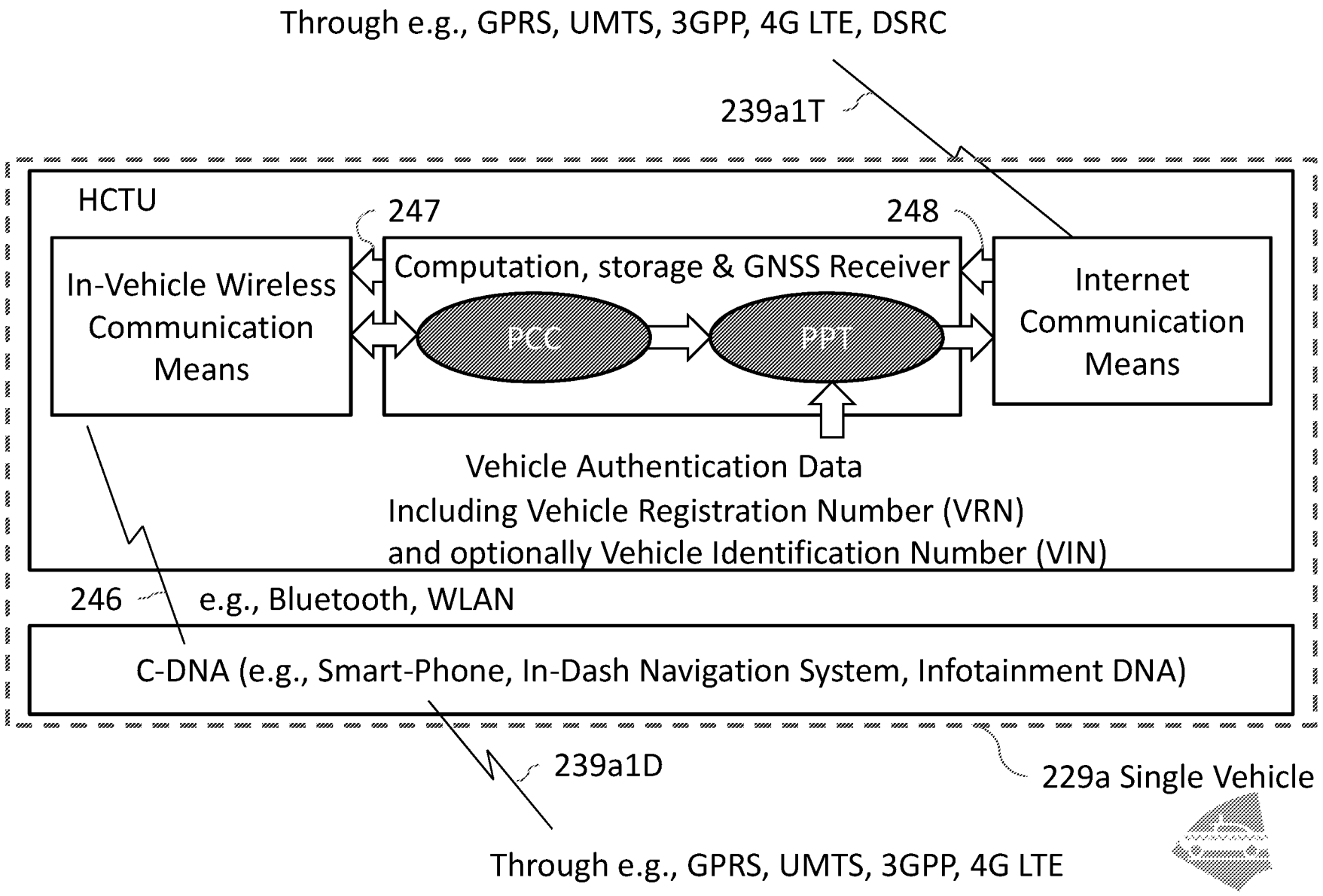
Through e.g., GPRS, UMTS, 3GPP, 4G LTE, DSRC
239a1T
HCTU
247
248
In-Vehicle Wireless Communication Means
Computation, storage & GNSS Receiver
PCC
PPT
Internet Communication Means
Vehicle Authentication Data
Including Vehicle Registration Number (VRN)
and optionally Vehicle Identification Number (VIN)
246
e.g., Bluetooth, WLAN
C-DNA (e.g., Smart-Phone, In-Dash Navigation System, Infotainment DNA)
239a1D
229a Single Vehicle
Through e.g., GPRS, UMTS, 3GPP, 4G LTE

Fig.3i1

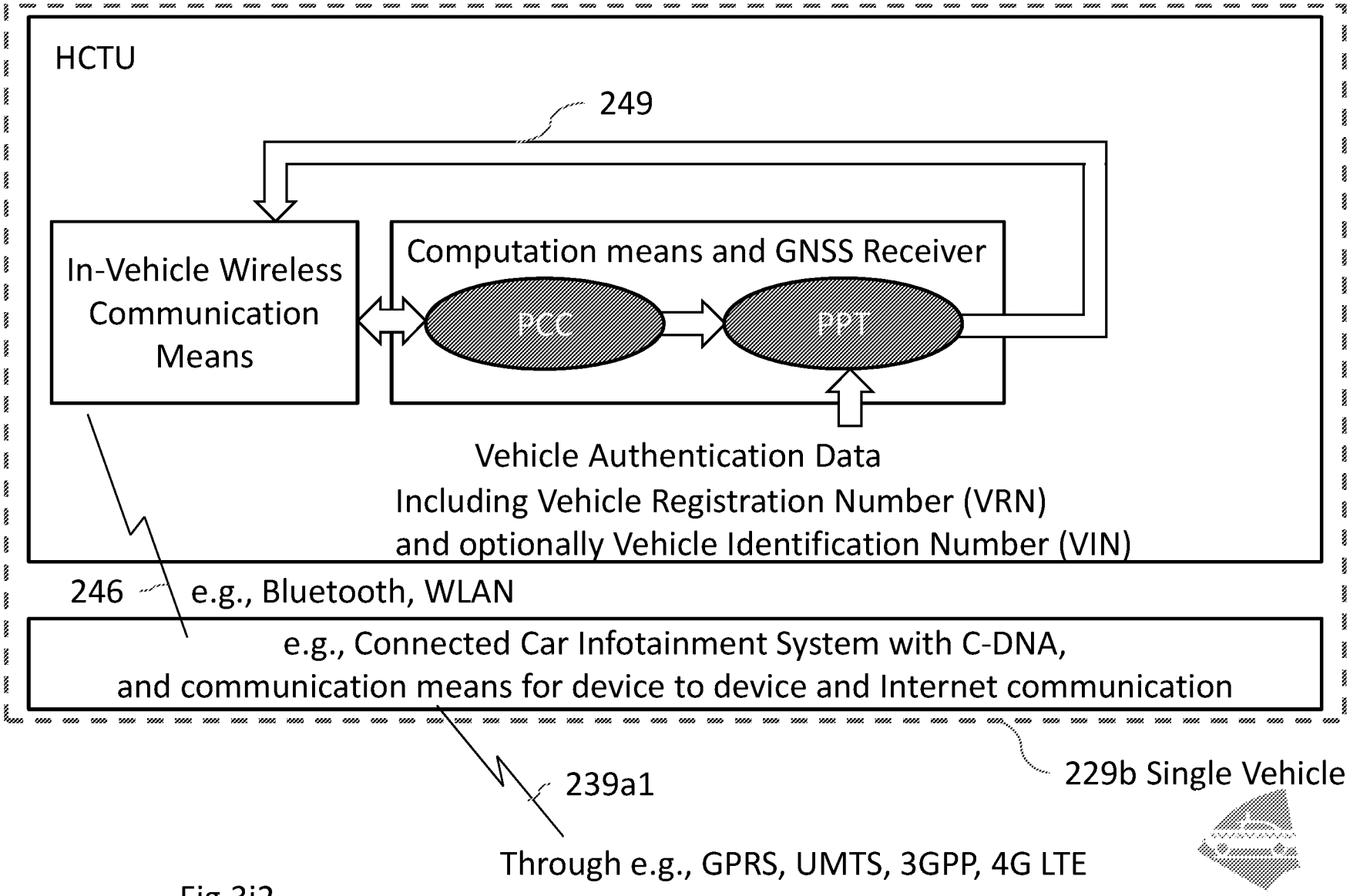
HCTU
249
In-Vehicle Wireless Communication Means
Computation means and GNSS Receiver
PCC
PPT
Vehicle Authentication Data
Including Vehicle Registration Number (VRN)
and optionally Vehicle Identification Number (VIN)
246
e.g., Bluetooth, WLAN
e.g., Connected Car Infotainment System with C-DNA,
and communication means for device to device and Internet communication
229b Single Vehicle
239a1
Through e.g., GPRS, UMTS, 3GPP, 4G LTE

Fig.3i2

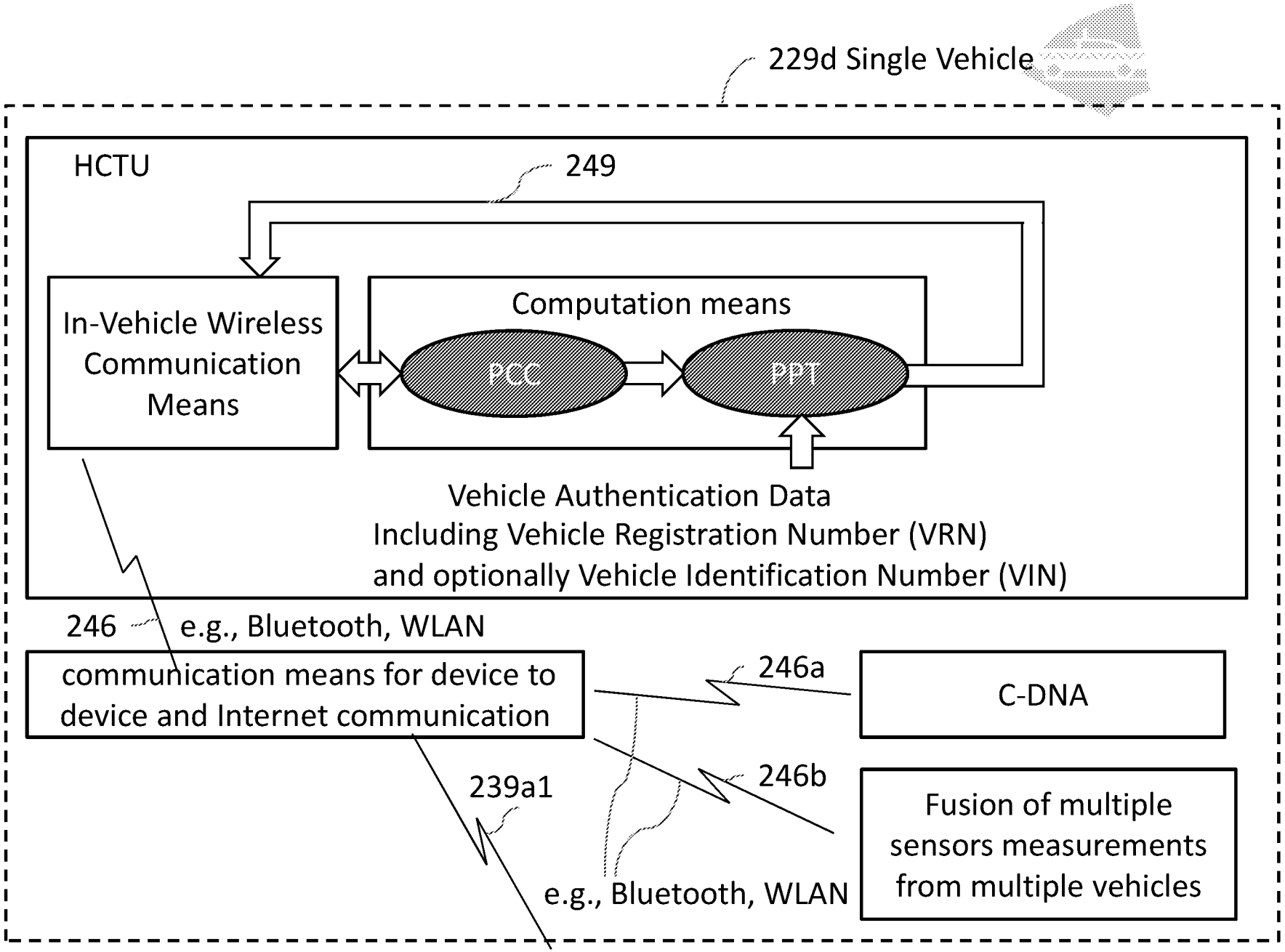
229d Single Vehicle
HCTU
249
In-Vehicle Wireless Communication Means
Computation means
PCC
PPT
Vehicle Authentication Data
Including Vehicle Registration Number (VRN)
and optionally Vehicle Identification Number (VIN)
246
e.g., Bluetooth, WLAN
communication means for device to device and Internet communication
246a
C-DNA
246b
239a1
Fusion of multiple sensors measurements from multiple vehicles
e.g., Bluetooth, WLAN
e.g., GPRS, UMTS, 3GPP, 4G LTE

Fig.3i3

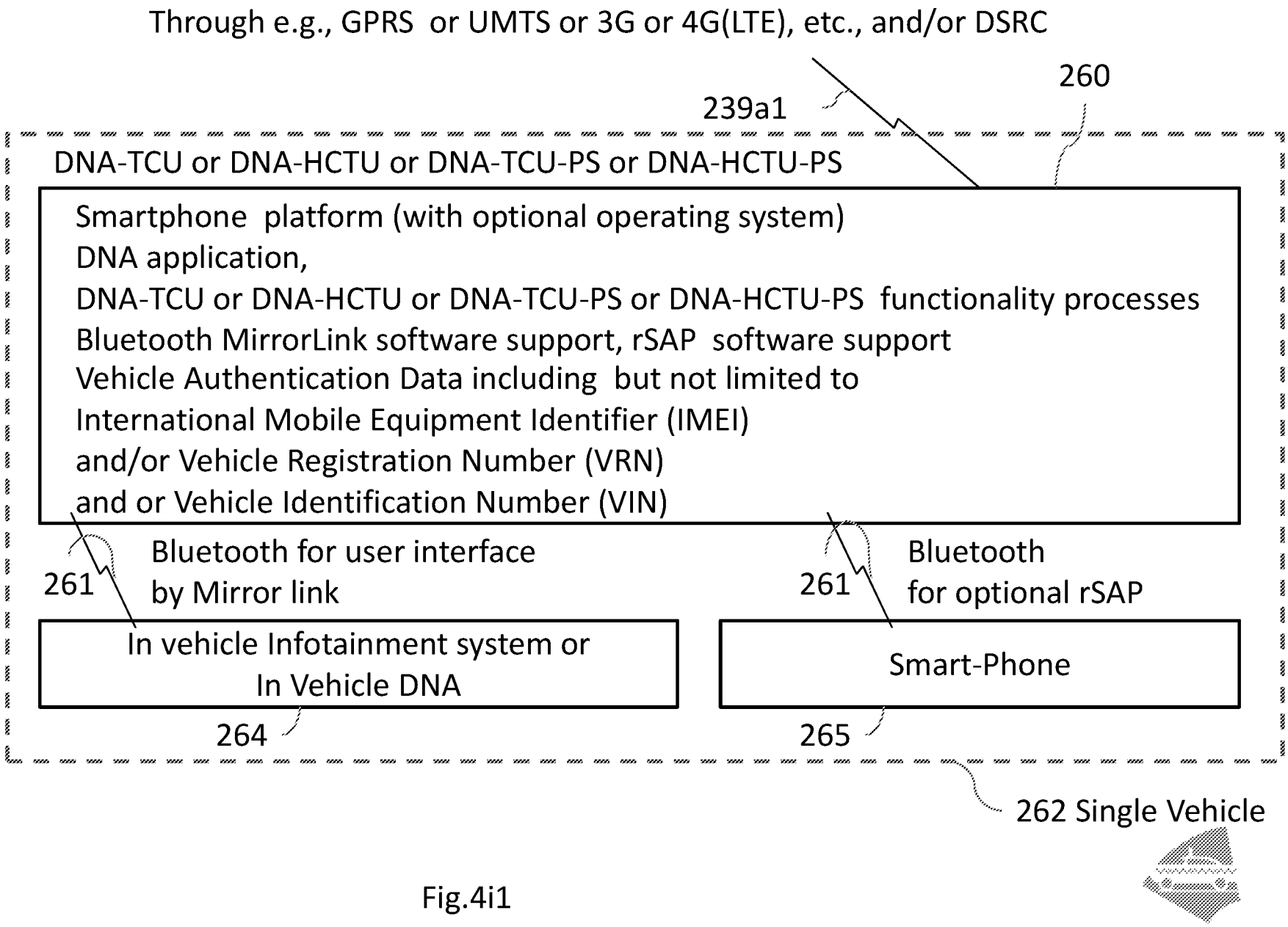
Through e.g., GPRS or UMTS or 3G or 4G(LTE), etc., and/or DSRC
260
239a1
DNA-TCU or DNA-HCTU or DNA-TCU-PS or DNA-HCTU-PS
Smartphone platform (with optional operating system)
DNA application,
DNA-TCU or DNA-HCTU or DNA-TCU-PS or DNA-HCTU-PS functionality processes
Bluetooth MirrorLink software support, rSAP software support
Vehicle Authentication Data including but not limited to
International Mobile Equipment Identifier (IMEI)
and/or Vehicle Registration Number (VRN)
and or Vehicle Identification Number (VIN)
261
Bluetooth for user interface
by Mirror link
261
Bluetooth
for optional rSAP
In vehicle Infotainment system or
In Vehicle DNA
Smart-Phone
264
265
262 Single Vehicle

Fig.4i1

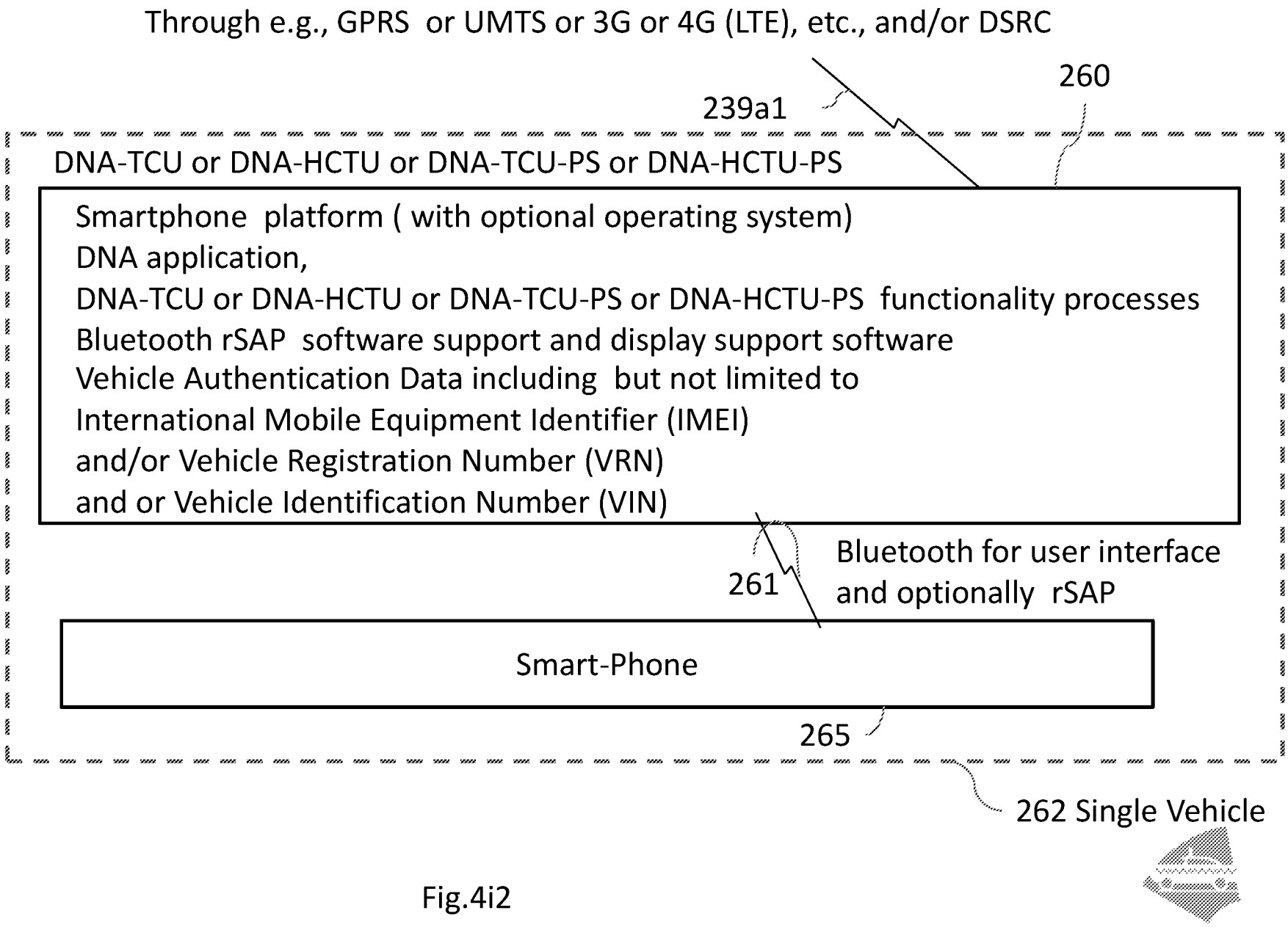
Through e.g., GPRS or UMTS or 3G or 4G (LTE), etc., and/or DSRC
260
239a1
DNA-TCU or DNA-HCTU or DNA-TCU-PS or DNA-HCTU-PS
Smartphone platform (with optional operating system)
DNA application,
DNA-TCU or DNA-HCTU or DNA-TCU-PS or DNA-HCTU-PS functionality processes
Bluetooth rSAP software support and display support software
Vehicle Authentication Data including but not limited to
International Mobile Equipment Identifier (IMEI)
and/or Vehicle Registration Number (VRN)
and or Vehicle Identification Number (VIN)
261
Bluetooth for user interface
and optionally rSAP
Smart-Phone
265
262 Single Vehicle

Fig.4i2