(12) INTERNATIONAL APPLICATION PUBLISHED UNDER THE PATENT COOPERATION TREATY (PCT)

(19) World Intellectual Property Organization
International Bureau

(43) International Publication Date
09 October 2025 (09.10.2025)

WIPO | PCT

(10) International Publication Number
WO 2025/209896 A1

(51) International Patent Classification:
B01F 27/808 (2022.01) *B01F 35/43* (2022.01)
B01F 27/81 (2022.01) *B01F 35/513* (2022.01)
B01F 27/91 (2022.01) *B01F 35/90* (2022.01)
B01F 33/453 (2022.01) *B01F 35/92* (2022.01)
B01F 35/42 (2022.01)

(21) International Application Number:
PCT/EP2025/058243

(22) International Filing Date:
26 March 2025 (26.03.2025)

(25) Filing Language: English

(26) Publication Language: English

(30) Priority Data:
18/624,940 02 April 2024 (02.04.2024) US

(71) Applicants: **CYTIVA US LLC** [US/US]; 100 Results Way, Marlborough, Massachusetts 01752 (US). **HYCLONE LIFE SCIENCES SOLUTIONS INDIA PRIVATE LIMITED** [IN/IN]; Galileo, John F. Welch Technology Centre, 122, EPIP Zone, Phase II, Hoodi Village, Whitefield Road, Bangalore, 560066 (IN).

(71) Applicant *(for MG only)*: **GLOBAL LIFE SCIENCES SOLUTIONS OPERATIONS UK LIMITED** [GB/GB]; 19 Jessops Riverside, 800 Brightside Lane, Sheffield Yorkshire S9 2RX (GB).

(72) Inventors: **MALONE, Adam Palmer**; 100 Results Way, Marlborough, Massachusetts 01752 (US). **DORVAL, Daniel**; 100 Results Way, Marlborough, Massachusetts 01752 (US). **JANG, Stuart**; 100 Results Way, Marlborough, Massachusetts 01752 (US). **RAO, Nagaraj**; Galileo, John F. Welch Technology Centre, 122, EPIP Zone, Phase II, Hoodi Village, Whitefield Road, Bangalore, 560066 (IN).

(74) Agent: **BEDFORD, Grant** et al.; Cytiva, Amersham Place, Little Chalfont Buckinghamshire HP7 9NA (GB).

(81) Designated States *(unless otherwise indicated, for every kind of national protection available)*: AE, AG, AL, AM, AO, AT, AU, AZ, BA, BB, BG, BH, BN, BR, BW, BY, BZ, CA, CH, CL, CN, CO, CR, CU, CV, CZ, DE, DJ, DK, DM, DO, DZ, EC, EE, EG, ES, FI, GB, GD, GE, GH, GM, GT, HN, HR, HU, ID, IL, IN, IQ, IR, IS, IT, JM, JO, JP, KE, KG, KH, KN, KP, KR, KW, KZ, LA, LC, LK, LR, LS, LU, LY, MA, MD, MG, MK, MN, MU, MW, MX, MY, MZ, NA, NG, NI, NO, NZ, OM, PA, PE, PG, PH, PL, PT, QA, RO, RS, RU, RW, SA, SC, SD, SE, SG, SK, SL, ST, SV, SY, TH, TJ, TM, TN, TR, TT, TZ, UA, UG, US, UY, UZ, VC, VN, WS, ZA, ZM, ZW.

(84) Designated States *(unless otherwise indicated, for every kind of regional protection available)*: ARIPO (BW, CV, GH, GM, KE, LR, LS, MW, MZ, NA, RW, SC, SD, SL, ST, SZ, TZ, UG, ZM, ZW), Eurasian (AM, AZ, BY, KG, KZ, RU, TJ, TM), European (AL, AT, BE, BG, CH, CY, CZ, DE, DK, EE, ES, FI, FR, GB, GR, HR, HU, IE, IS, IT, LT, LU, LV, MC, ME, MK, MT, NL, NO, PL, PT, RO, RS, SE, SI, SK, SM, TR), OAPI (BF, BJ, CF, CG, CI, CM, GA, GN, GQ, GW, KM, ML, MR, NE, SN, TD, TG).

WO 2025/209896 A1

(54) Title: SMALL VOLUME MIXING DEVICE

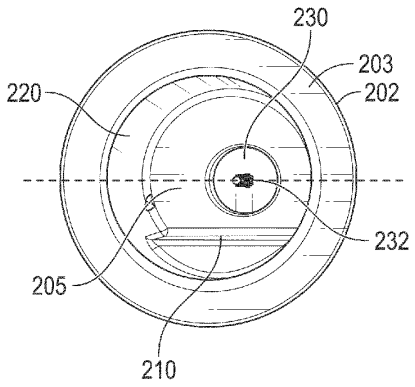

FIG. 2C

(57) Abstract: Provided herein is a mixer base assembly (200) comprising:(a) a body (501) having: an upper end (202) including a mating face (203) for mixing vessel (240) connection; a lower end (204) including a cavity; a fluid mixing chamber (212) having a bottom wall (205); a rounded side wall (220) and a flat side wall (210), wherein the rounded side wall (220) at a first part is the only wall encasing the fluid mixing chamber (212) and at a second part joins with the flat side wall (210) to encase the fluid mixing chamber (212); an inlet port (208, 207, 408, 411) arranged in one of the side walls (210, 401); an outlet port (207, 208, 406, 413) arranged in one of the side walls (210, 401), and; at least one probe port (209) arranged in one of side walls (210, 401); an impeller seat (230) arranged in the cavity (214, 235, 404, 412) in the lower end (204) of the body (120, 501); and, an impeller (236) arranged in the impeller seat (230).

[Continued on next page]

Published:

— *with international search report (Art. 21(3))*

— *before the expiration of the time limit for amending the claims and to be republished in the event of receipt of amendments (Rule 48.2(h))*