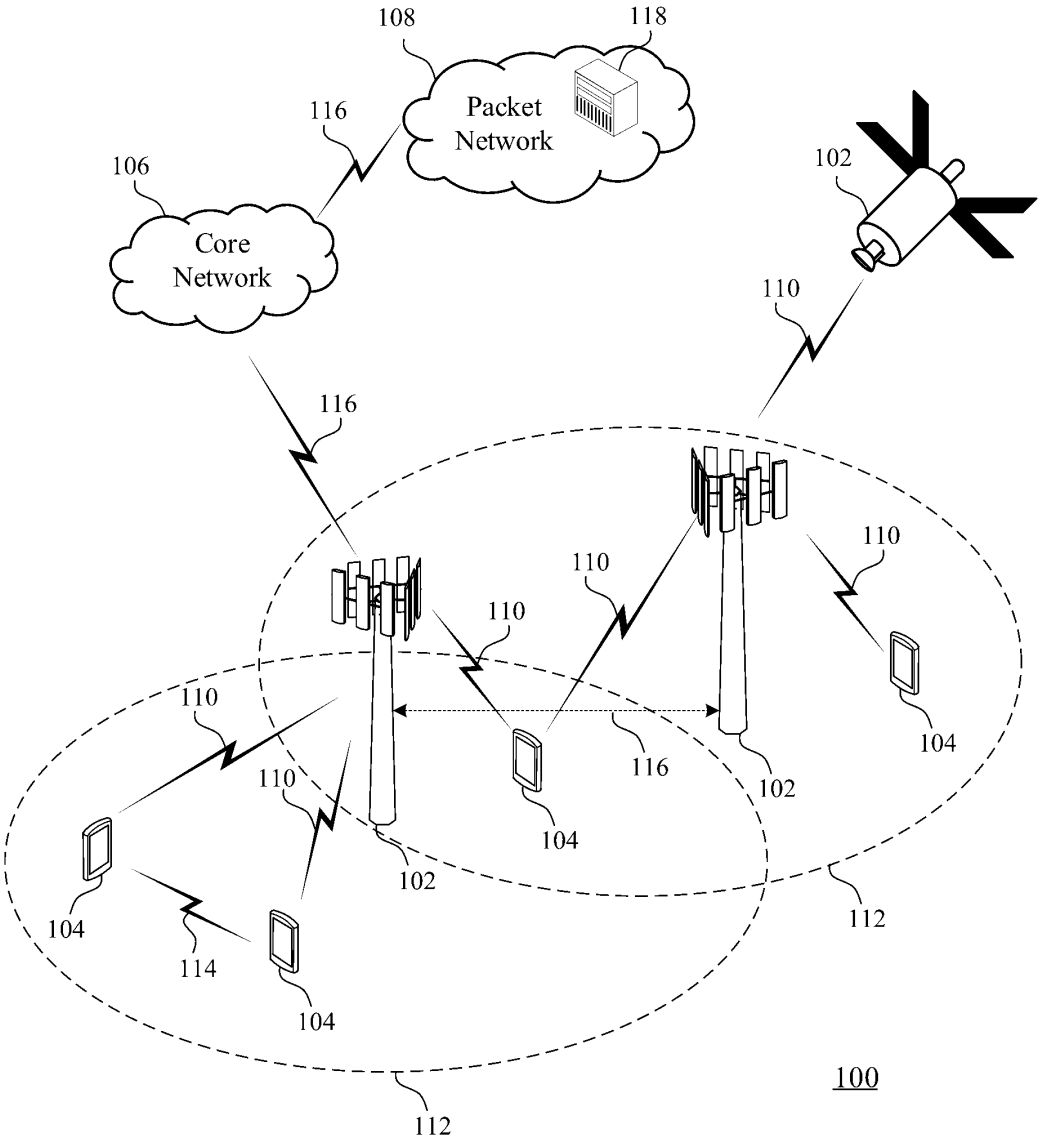
108
118
Packet Network
116
106
Core Network
102
110
116
110
110
110
110
104
116
102
110
104
102
104
112
114
104
112
100

FIG. 1A

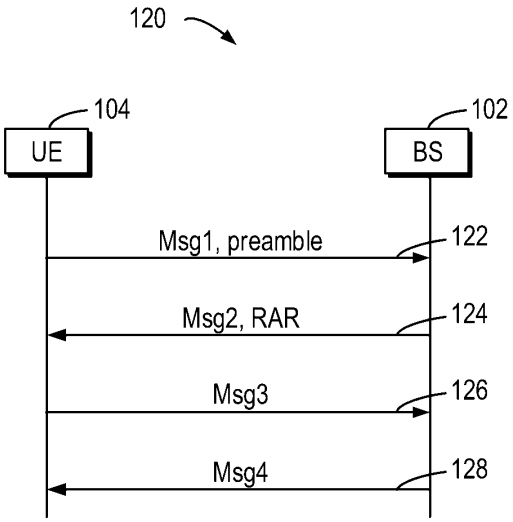
120
104
UE
102
BS
Msg1, preamble
122
Msg2, RAR
124
Msg3
126
Msg4
128

FIG. 1B

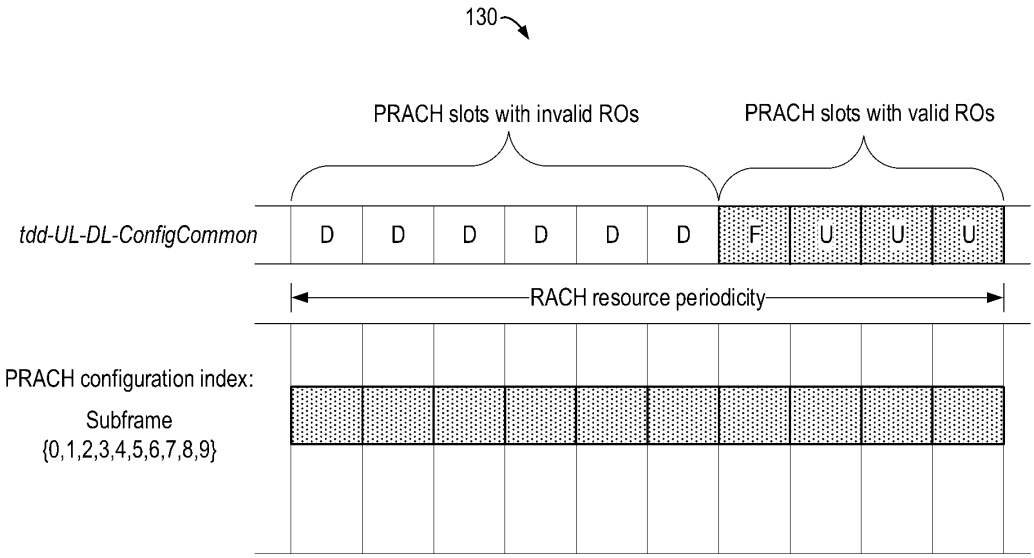
130
PRACH slots with invalid ROs
PRACH slots with valid ROs
tdd-UL-DL-ConfigCommon
D
D
D
D
D
D
F
U
U
U
RACH resource periodicity
PRACH configuration index:
Subframe
{0,1,2,3,4,5,6,7,8,9}

FIG. 1C

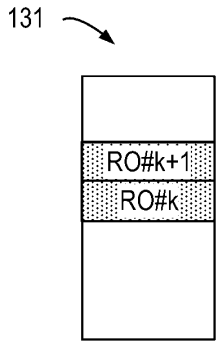
131
RO#k+1
RO#k

FIG. 1D

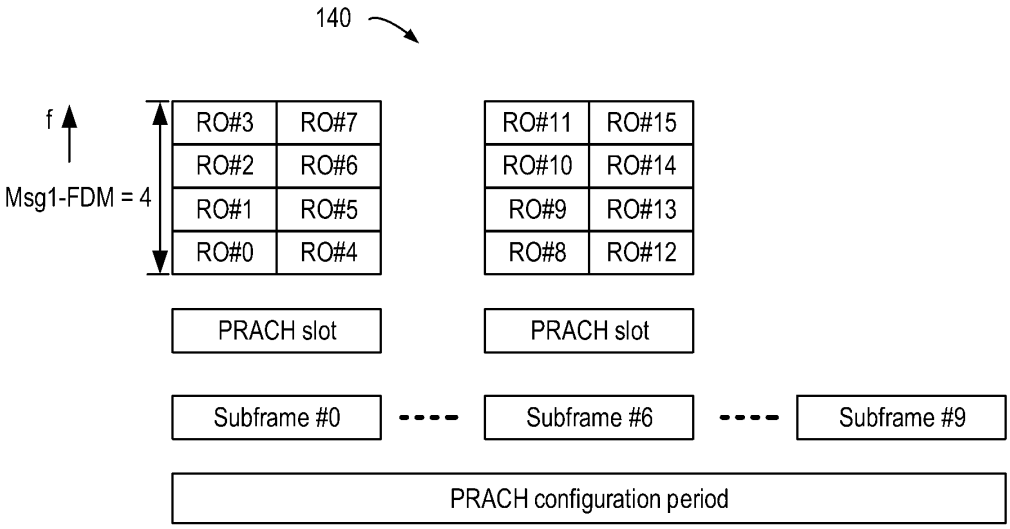
140
f
Msg1-FDM = 4
RO#3
RO#7
RO#2
RO#6
RO#1
RO#5
RO#0
RO#4
RO#11
RO#15
RO#10
RO#14
RO#9
RO#13
RO#8
RO#12
PRACH slot
PRACH slot
Subframe #0
Subframe #6
Subframe #9
PRACH configuration period

FIG. 1E

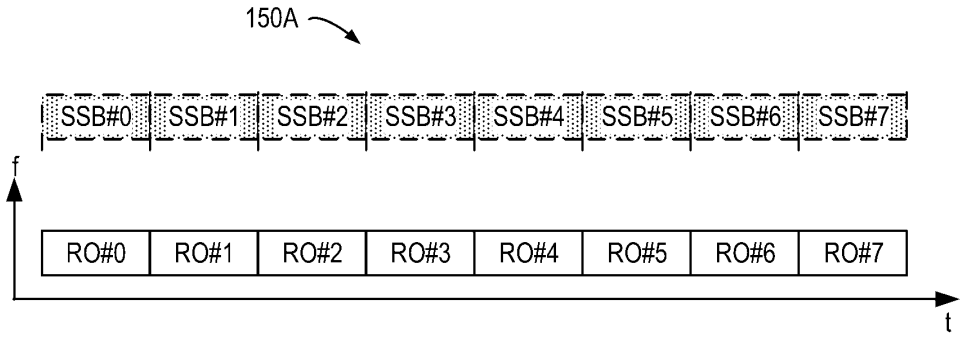

FIG. 1F

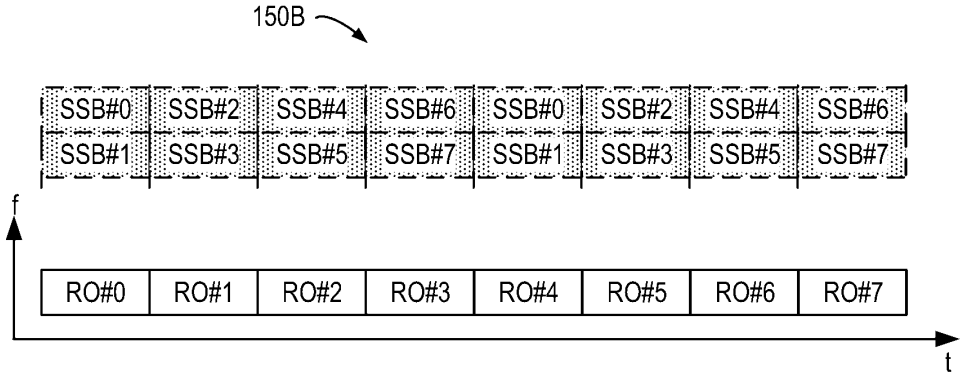

FIG. 1G

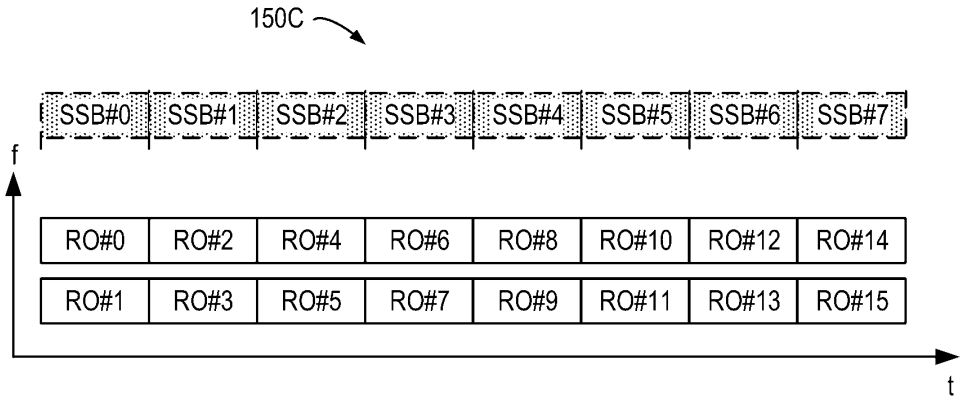

FIG. 1H

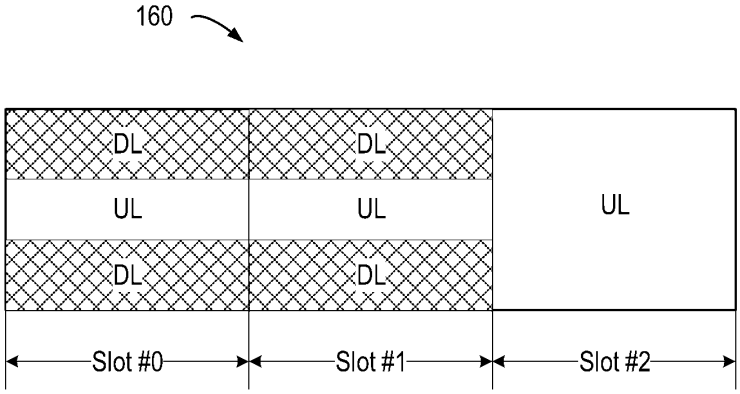

FIG. 1I

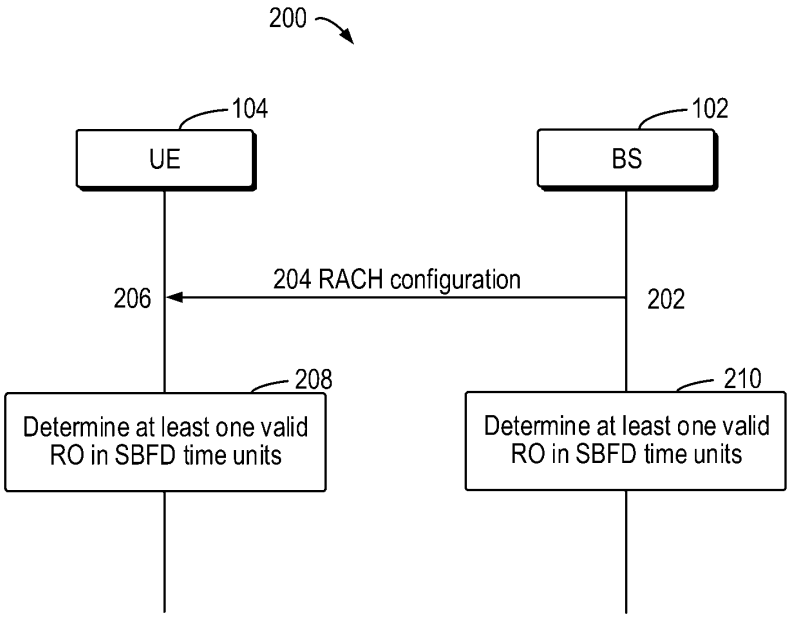
200
104
UE
102
BS
206
204 RACH configuration
202
208
Determine at least one valid RO in SBFD time units
210
Determine at least one valid RO in SBFD time units

FIG. 2

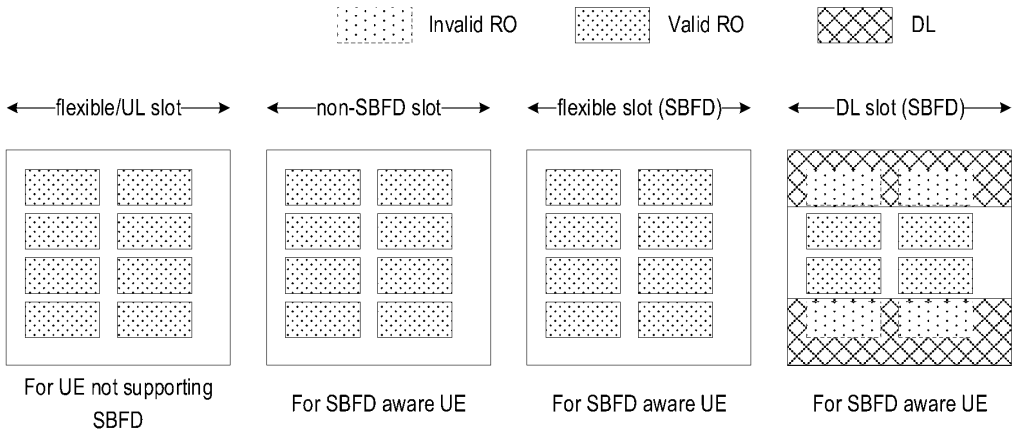
Invalid RO
Valid RO
DL
flexible/UL slot
non-SBFD slot
flexible slot (SBFD)
DL slot (SBFD)
For UE not supporting SBFD
For SBFD aware UE
For SBFD aware UE
For SBFD aware UE

FIG. 3A

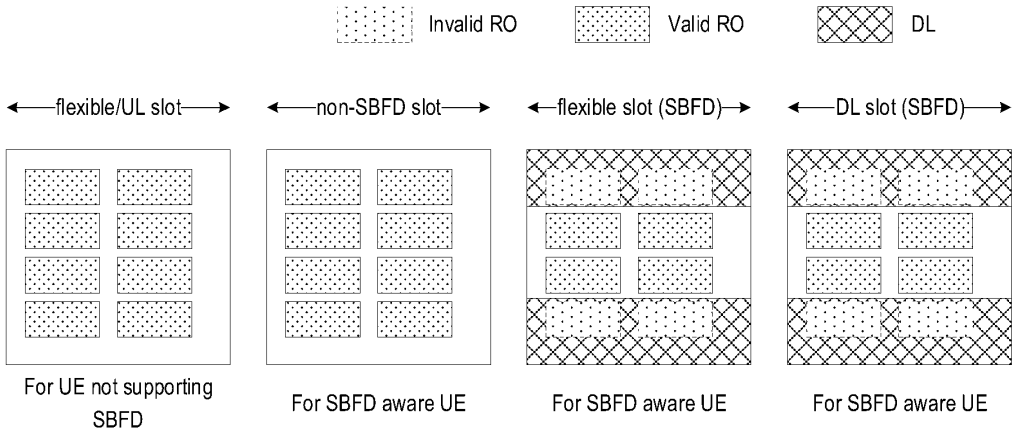
Invalid RO
Valid RO
DL
flexible/UL slot
non-SBFD slot
flexible slot (SBFD)
DL slot (SBFD)
For UE not supporting SBFD
For SBFD aware UE
For SBFD aware UE
For SBFD aware UE

FIG. 3B

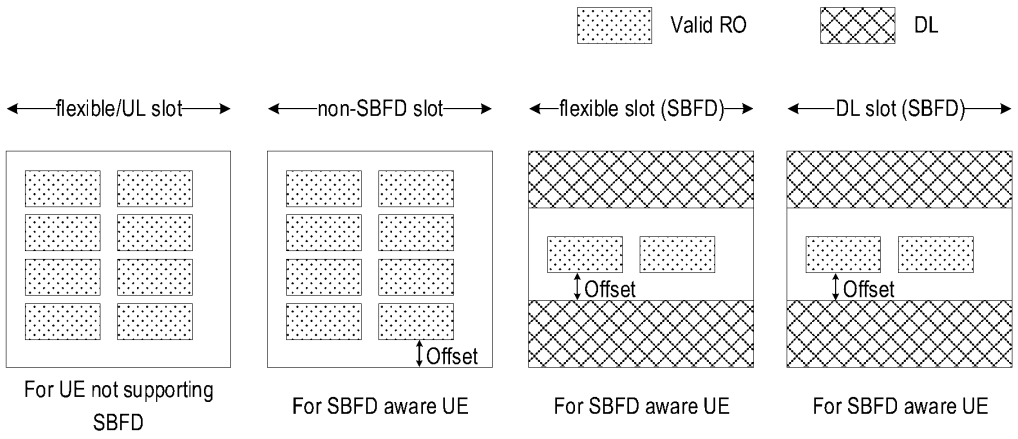
Valid RO
DL
flexible/UL slot
non-SBFD slot
flexible slot (SBFD)
DL slot (SBFD)
Offset
Offset
Offset
For UE not supporting SBFD
For SBFD aware UE
For SBFD aware UE
For SBFD aware UE

FIG. 3C

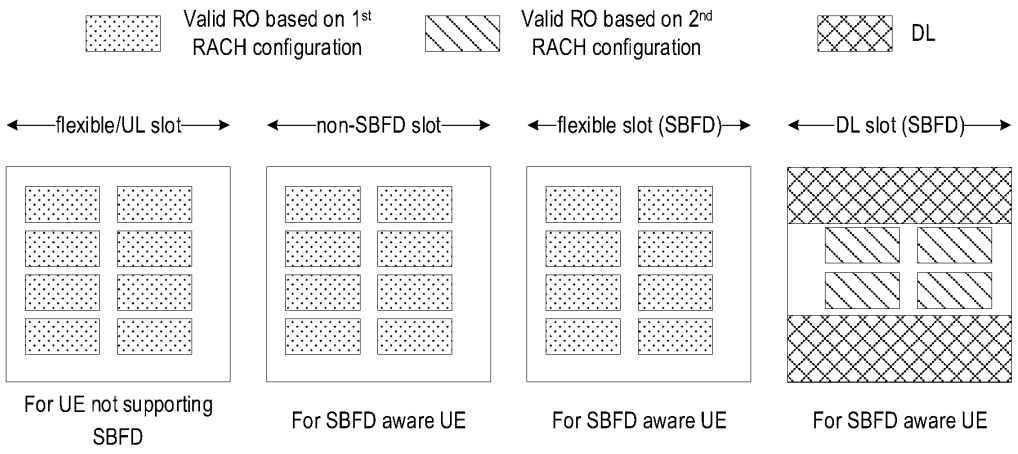
Valid RO based on 1st RACH configuration
Valid RO based on 2nd RACH configuration
DL
flexible/UL slot
non-SBFD slot
flexible slot (SBFD)
DL slot (SBFD)
For UE not supporting SBFD
For SBFD aware UE
For SBFD aware UE
For SBFD aware UE

FIG. 4A

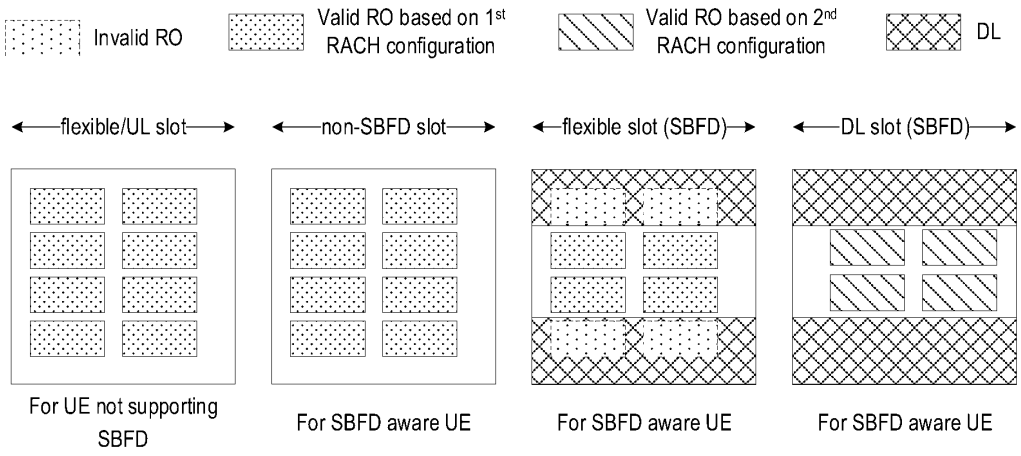
Invalid RO
Valid RO based on 1st RACH configuration
Valid RO based on 2nd RACH configuration
DL
flexible/UL slot
non-SBFD slot
flexible slot (SBFD)
DL slot (SBFD)
For UE not supporting SBFD
For SBFD aware UE
For SBFD aware UE
For SBFD aware UE

FIG. 4B

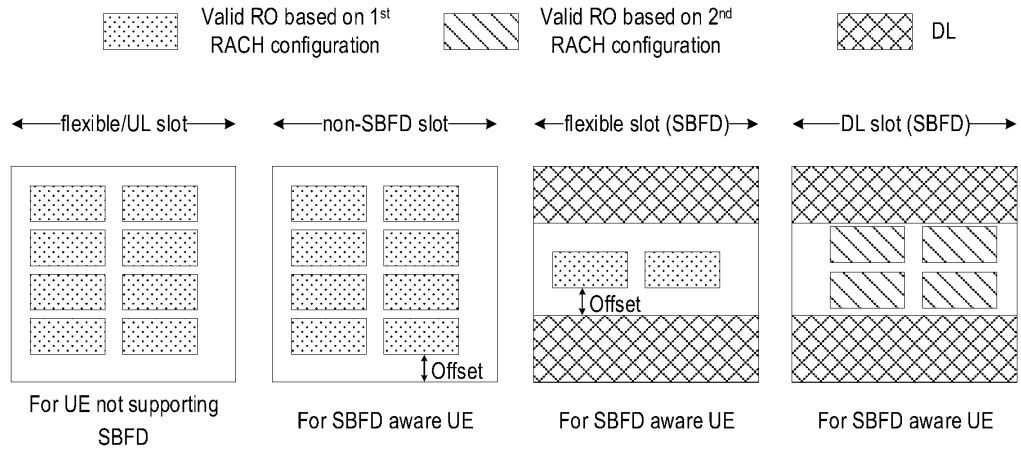
Valid RO based on 1st RACH configuration
Valid RO based on 2nd RACH configuration
DL
flexible/UL slot
non-SBFD slot
flexible slot (SBFD)
DL slot (SBFD)
Offset
Offset
For UE not supporting SBFD
For SBFD aware UE
For SBFD aware UE
For SBFD aware UE

FIG. 4C

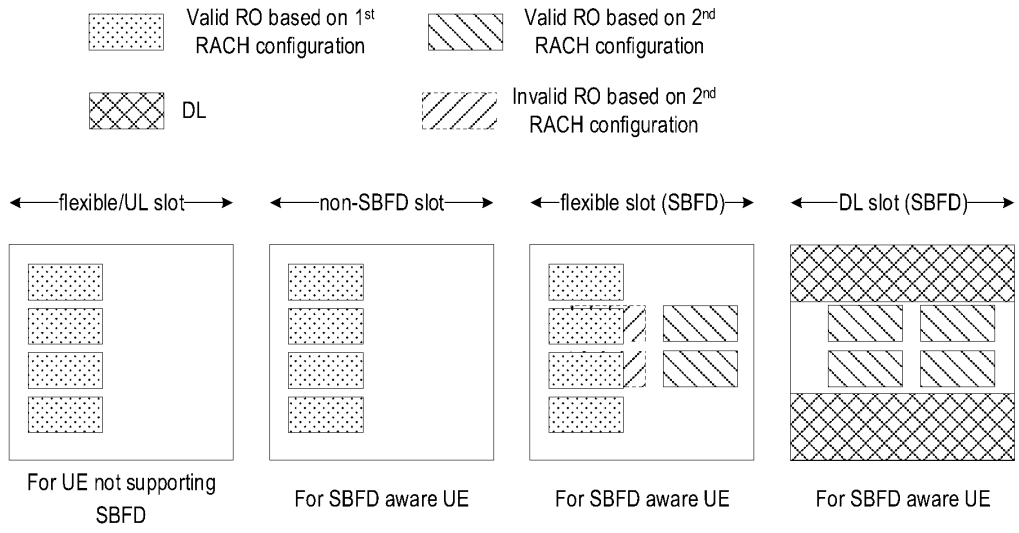
Valid RO based on 1st RACH configuration
Valid RO based on 2nd RACH configuration
DL
Invalid RO based on 2nd RACH configuration
flexible/UL slot
non-SBFD slot
flexible slot (SBFD)
DL slot (SBFD)
For UE not supporting SBFD
For SBFD aware UE
For SBFD aware UE
For SBFD aware UE

FIG. 5A

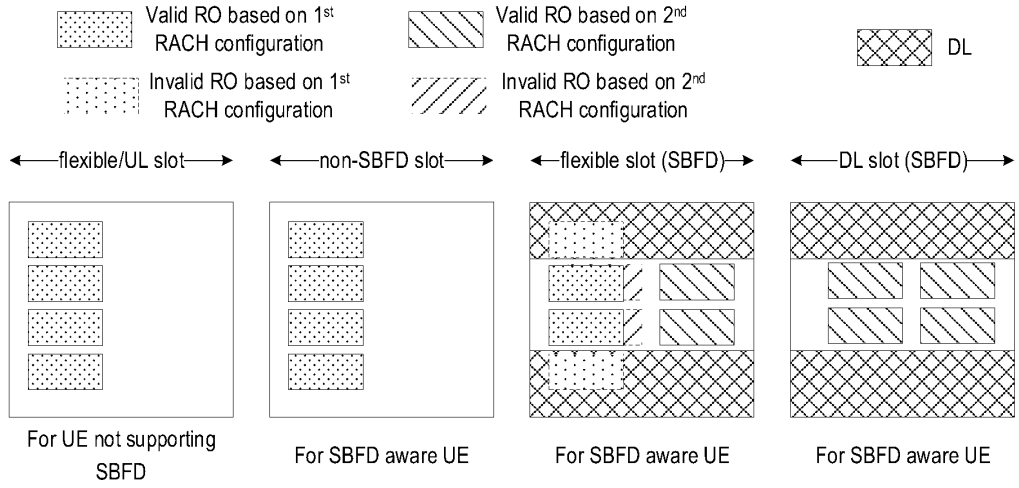
Valid RO based on 1st RACH configuration
Valid RO based on 2nd RACH configuration
DL
Invalid RO based on 1st RACH configuration
Invalid RO based on 2nd RACH configuration
flexible/UL slot
non-SBFD slot
flexible slot (SBFD)
DL slot (SBFD)
For UE not supporting SBFD
For SBFD aware UE
For SBFD aware UE
For SBFD aware UE

FIG. 5B

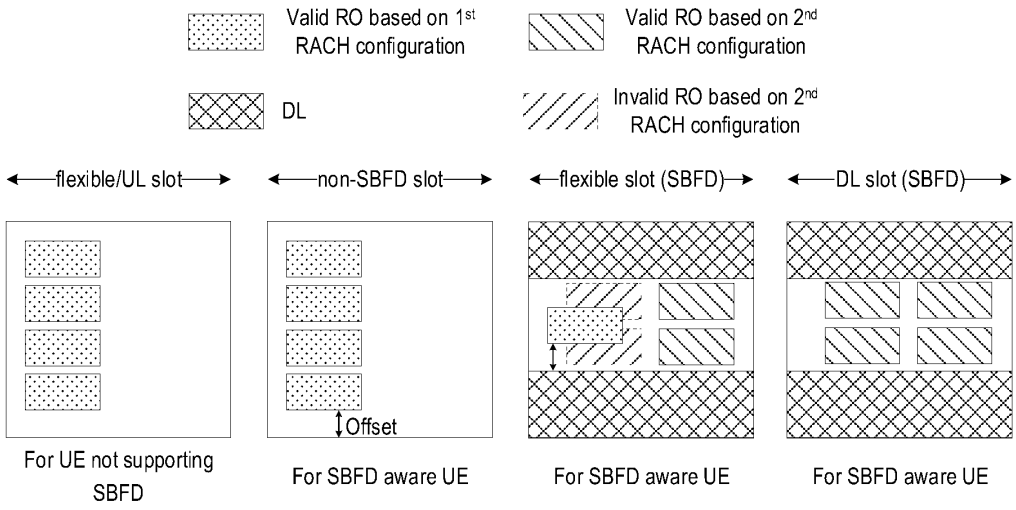
Valid RO based on 1st RACH configuration
Valid RO based on 2nd RACH configuration
DL
Invalid RO based on 2nd RACH configuration
flexible/UL slot
non-SBFD slot
flexible slot (SBFD)
DL slot (SBFD)
Offset
For UE not supporting SBFD
For SBFD aware UE
For SBFD aware UE
For SBFD aware UE

FIG. 5C

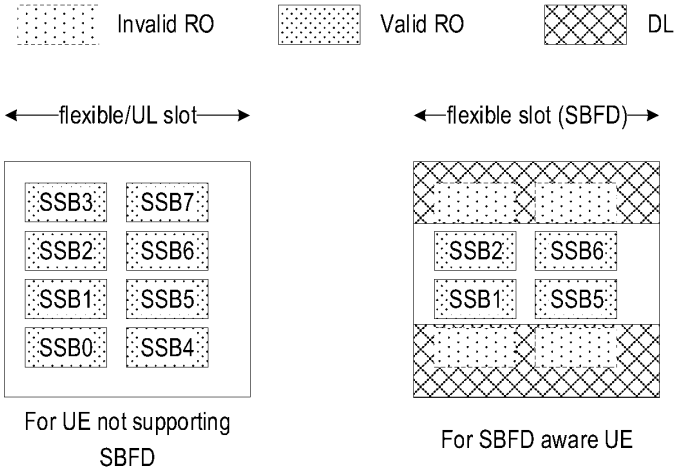
Invalid RO
Valid RO
DL
flexible/UL slot
flexible slot (SBFD)
SSB3
SSB7
SSB2
SSB6
SSB1
SSB5
SSB0
SSB4
SSB2
SSB6
SSB1
SSB5
For UE not supporting SBFD
For SBFD aware UE

FIG. 6

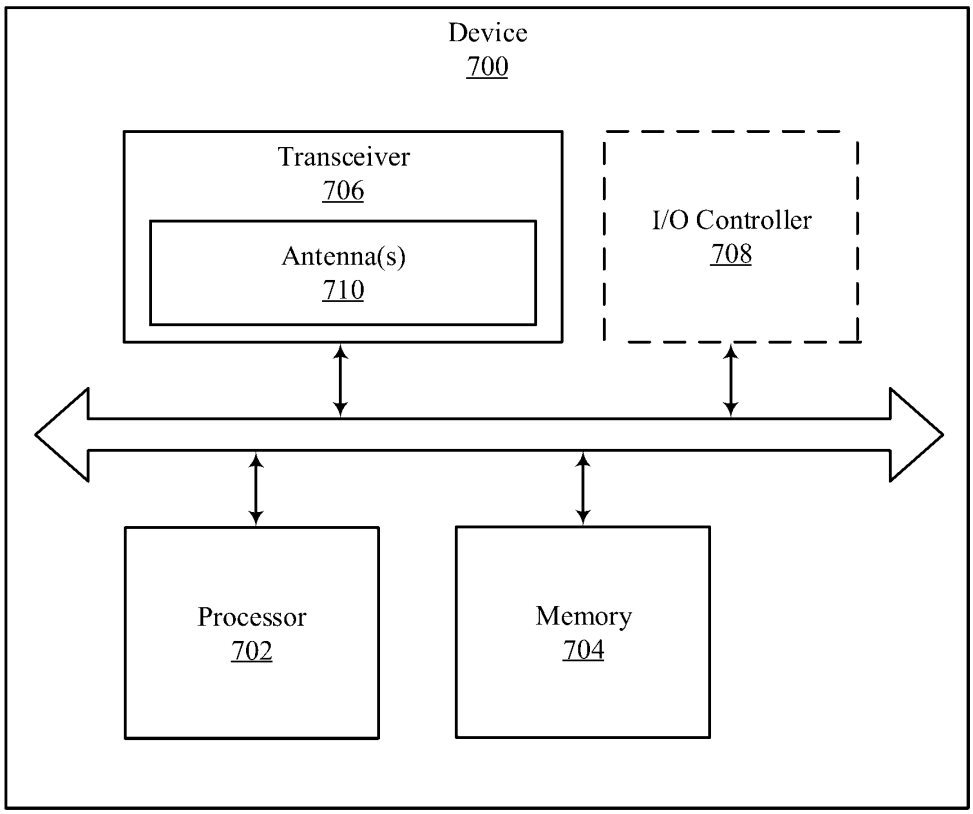
Device
700
Transceiver
706
Antenna(s)
710
I/O Controller
708
Processor
702
Memory
704

FIG. 7

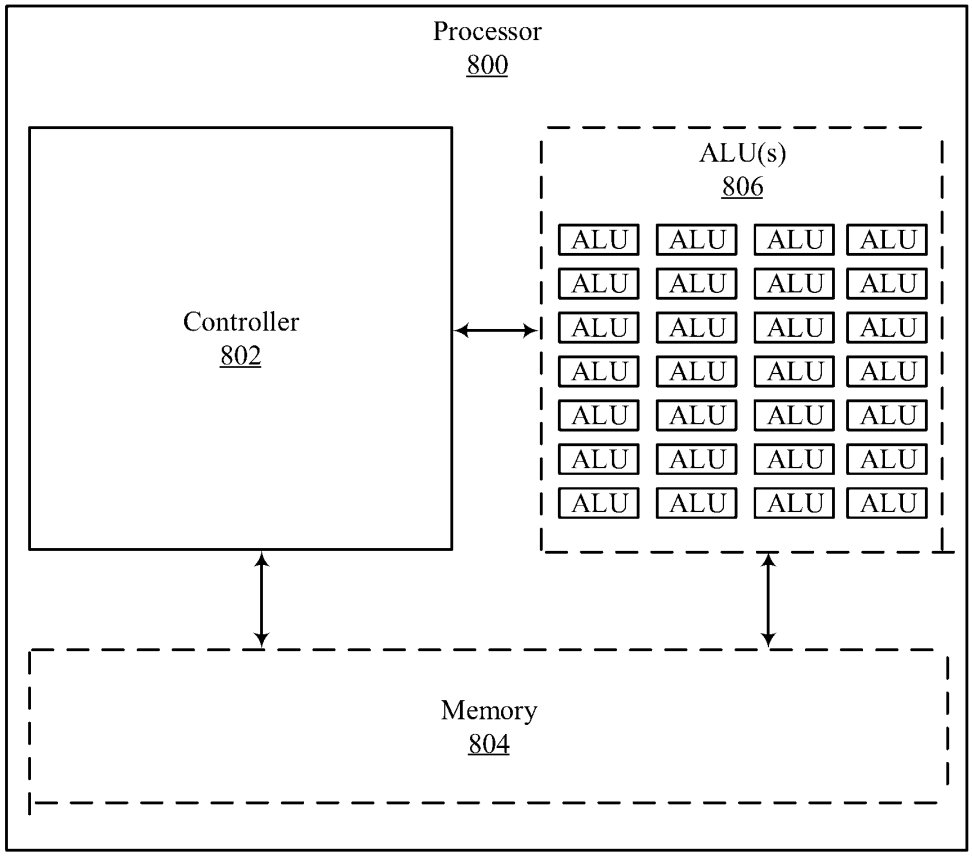

FIG. 8

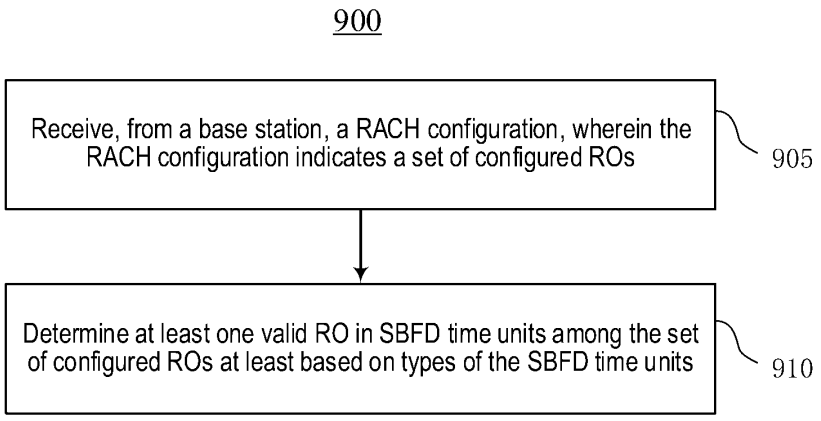
900
Receive, from a base station, a RACH configuration, wherein the RACH configuration indicates a set of configured ROs
905
Determine at least one valid RO in SBFD time units among the set of configured ROs at least based on types of the SBFD time units
910

FIG. 9

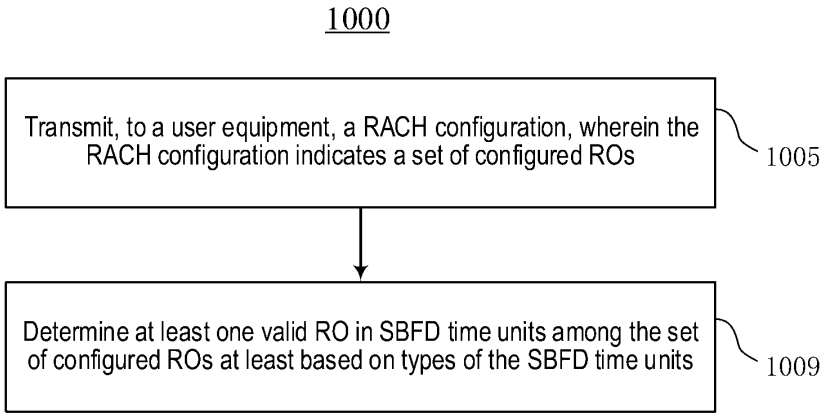
1000
Transmit, to a user equipment, a RACH configuration, wherein the RACH configuration indicates a set of configured ROs
1005
Determine at least one valid RO in SBFD time units among the set of configured ROs at least based on types of the SBFD time units
1009

FIG. 10