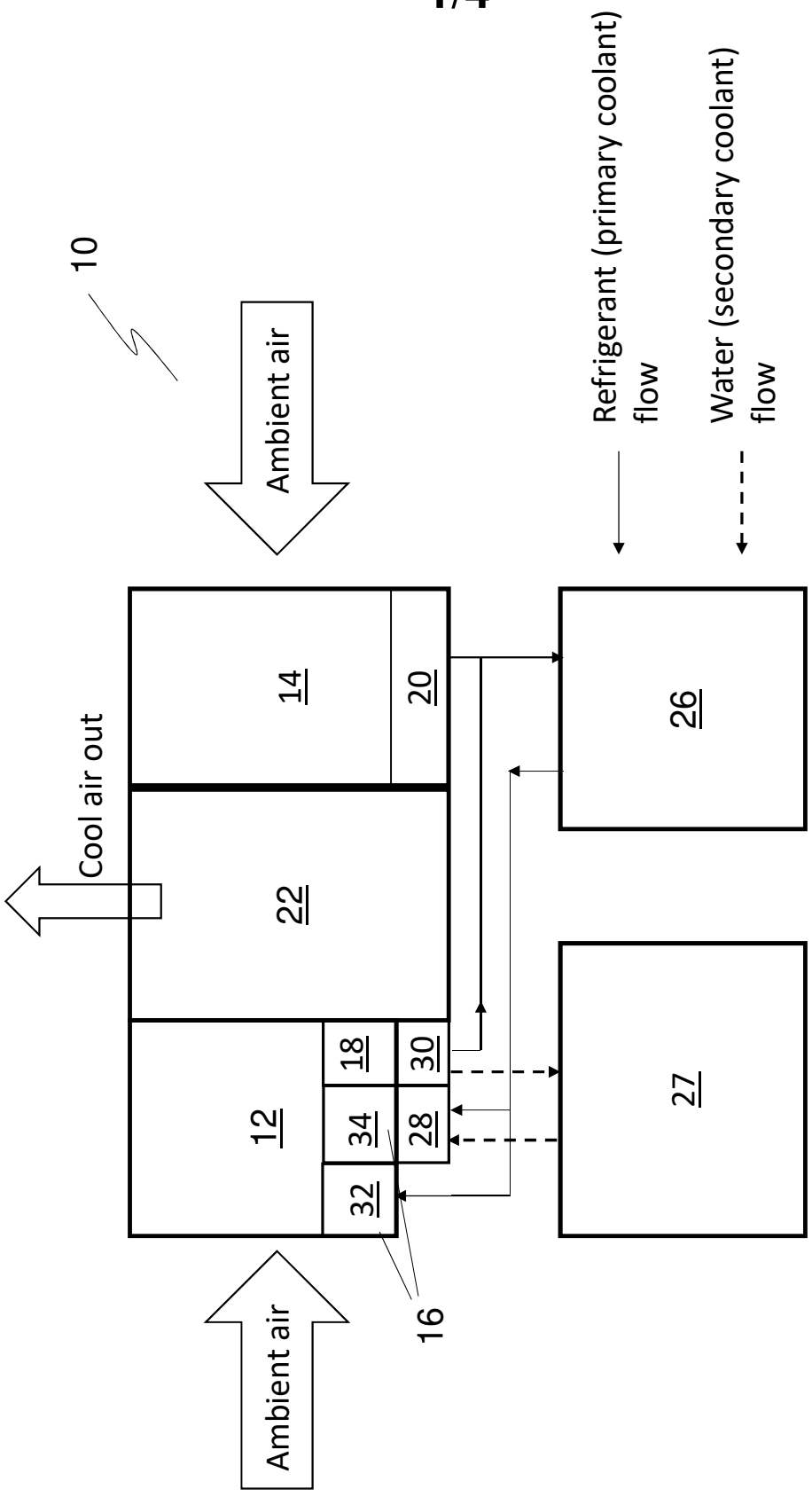
10
Ambient air
Refrigerant (primary coolant) flow
Water (secondary coolant) flow
Cool air out
14
20
22
26
12
18
30
34
28
27
32
16
Ambient air

Figure. 1

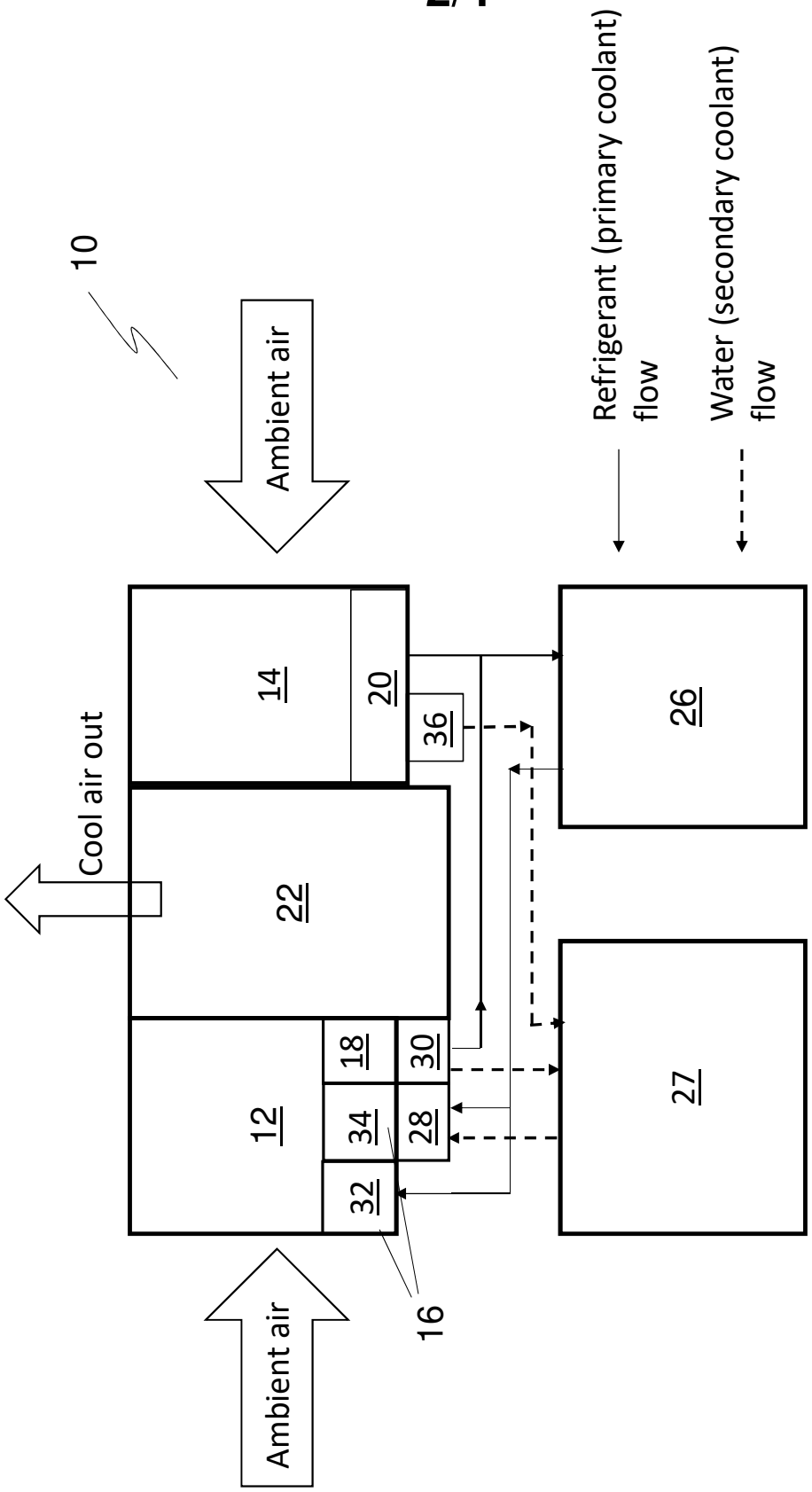
10
Ambient air
Refrigerant (primary coolant) flow
Water (secondary coolant) flow
Cool air out
14
20
36
26
22
18
30
12
34
28
27
32
16
Ambient air

Figure. 2

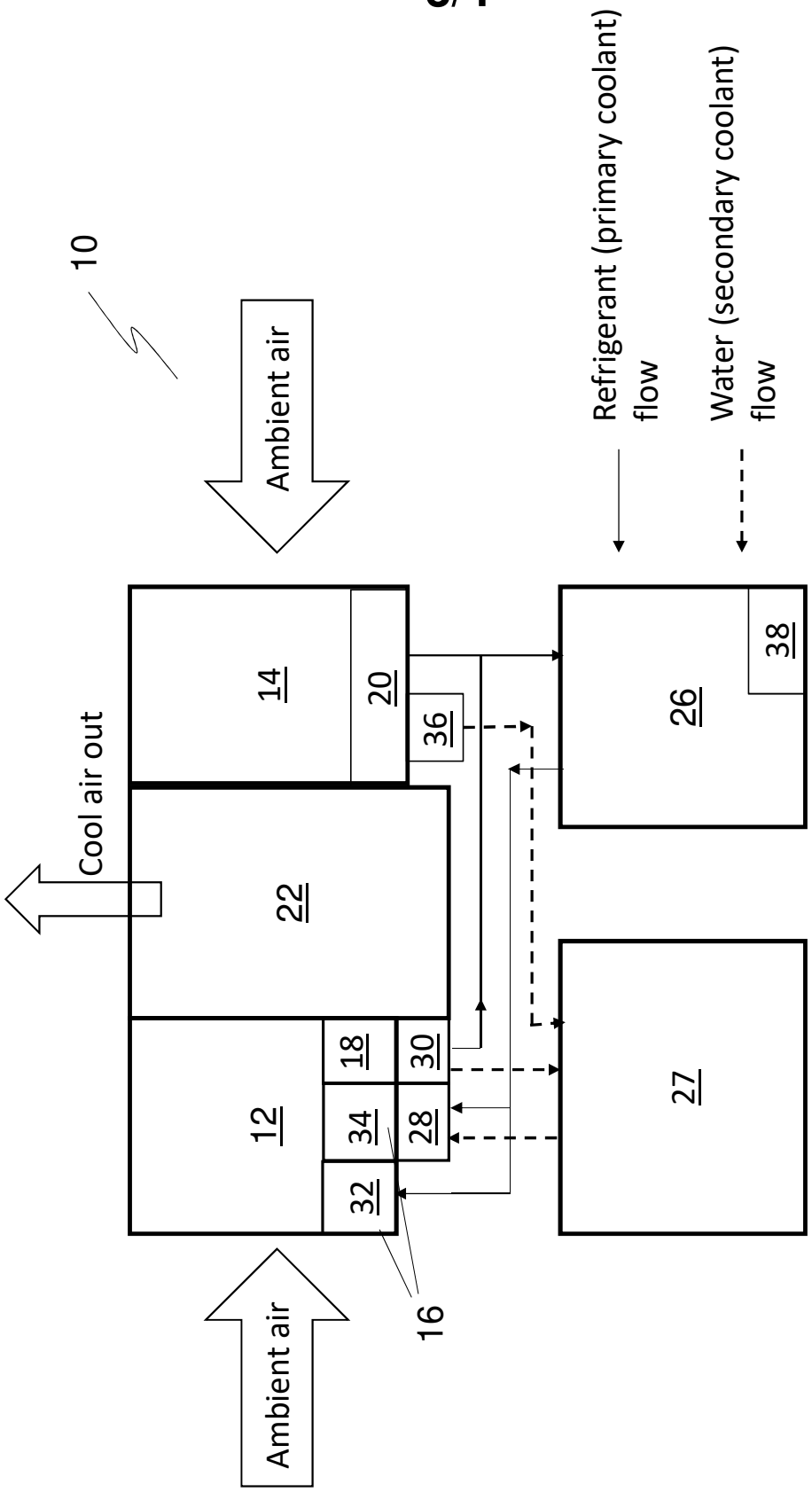
10
Ambient air
Refrigerant (primary coolant) flow
Water (secondary coolant) flow
Cool air out
14
20
36
26
38
22
12
18
30
34
28
27
32
16
Ambient air

Figure. 3

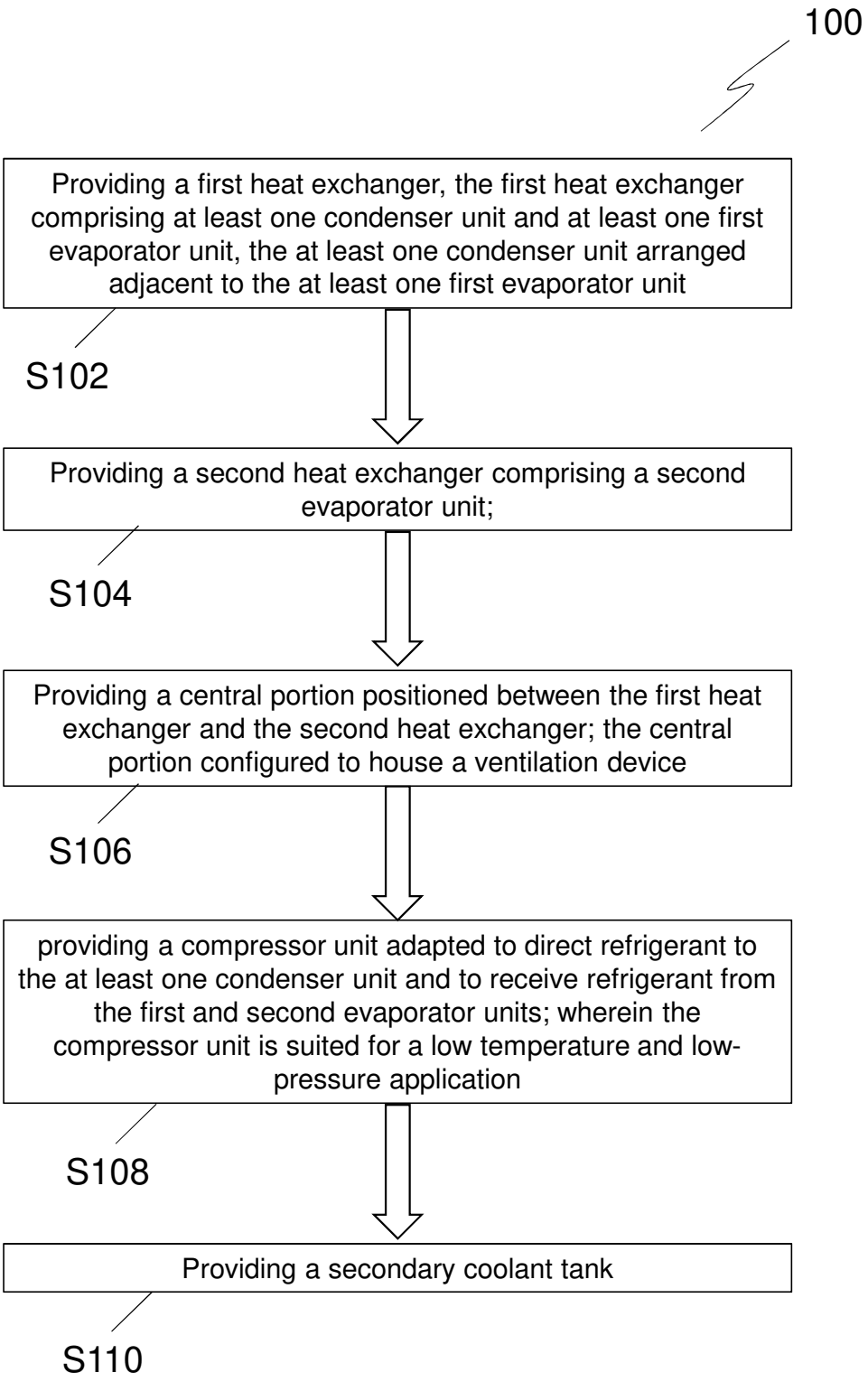
100
Providing a first heat exchanger, the first heat exchanger comprising at least one condenser unit and at least one first evaporator unit, the at least one condenser unit arranged adjacent to the at least one first evaporator unit
S102
Providing a second heat exchanger comprising a second evaporator unit;
S104
Providing a central portion positioned between the first heat exchanger and the second heat exchanger; the central portion configured to house a ventilation device
S106
providing a compressor unit adapted to direct refrigerant to the at least one condenser unit and to receive refrigerant from the first and second evaporator units; wherein the compressor unit is suited for a low temperature and low-pressure application
S108
Providing a secondary coolant tank
S110

Figure. 4