Fig.1

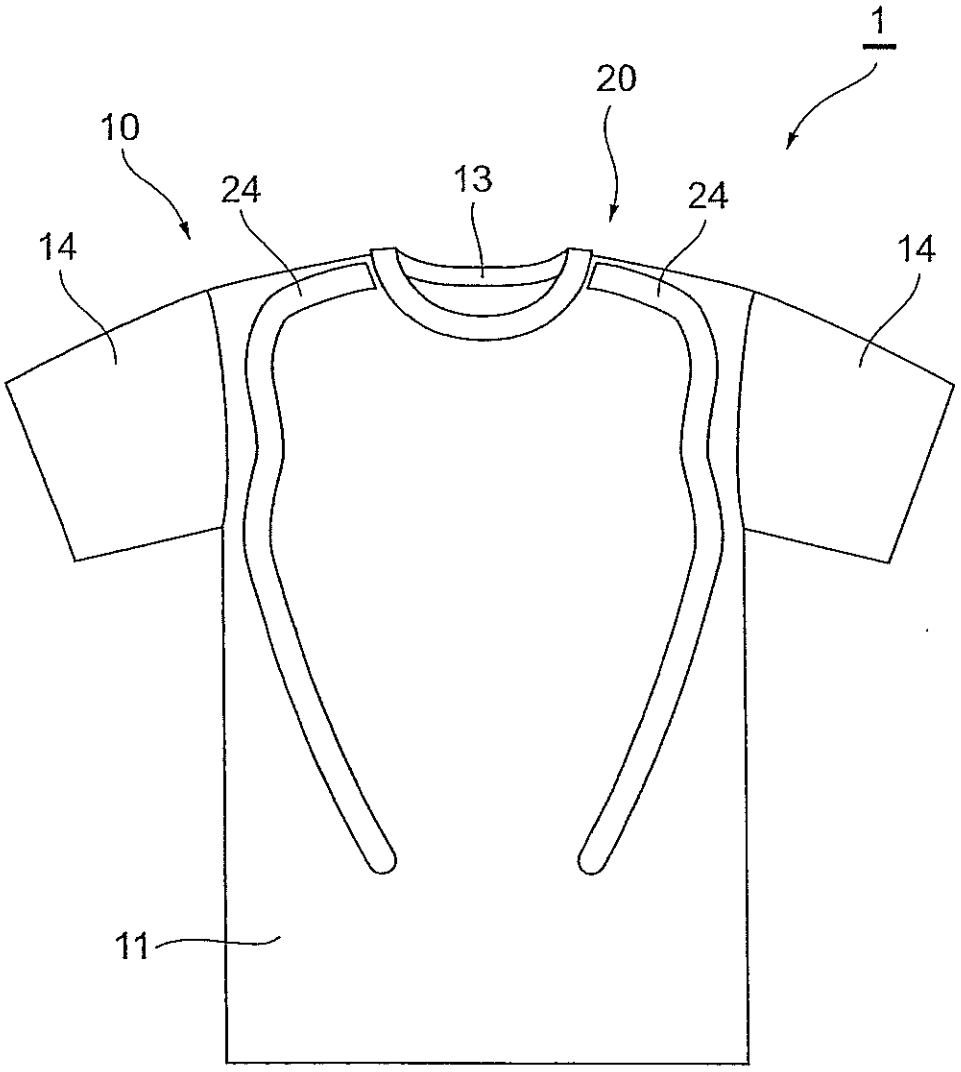

Fig.2

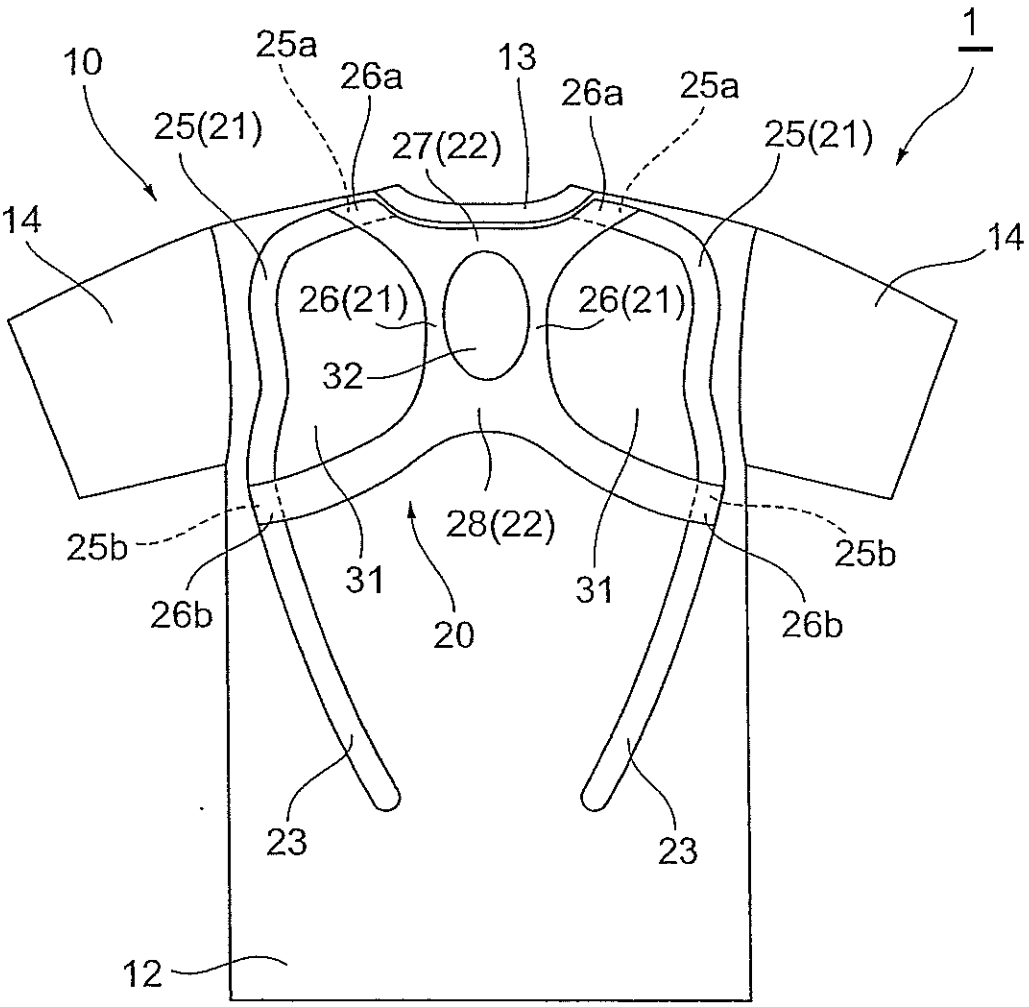
1
10
25a
26a
13
26a
25a
25(21)
27(22)
25(21)
14
14
26(21)
26(21)
32
25b
25b
28(22)
31
31
26b
26b
20
23
23
12

Fig.3

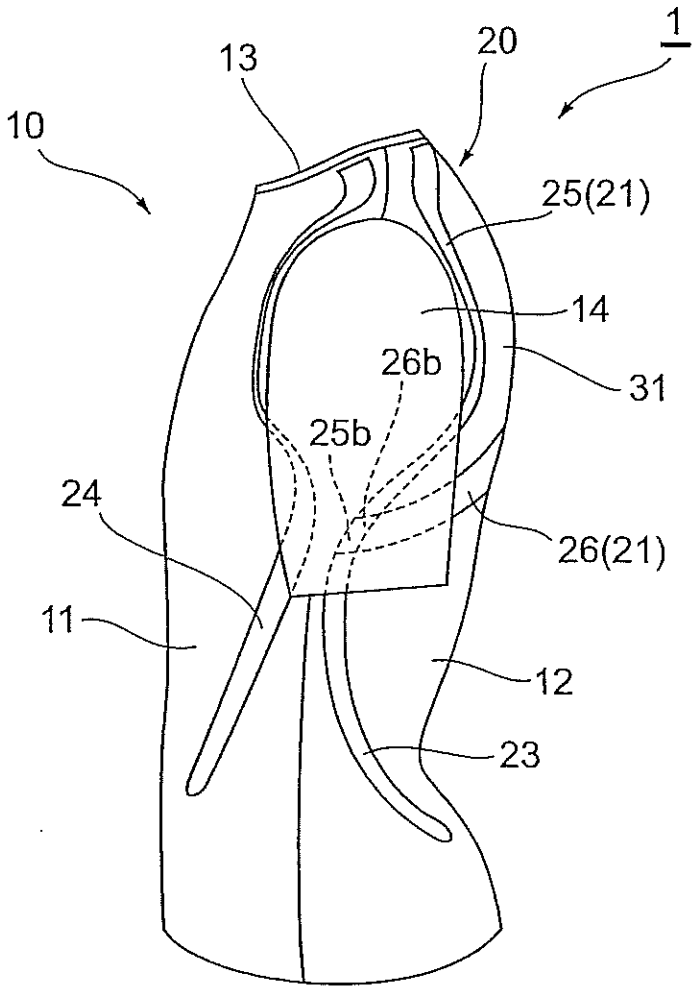

Fig.4

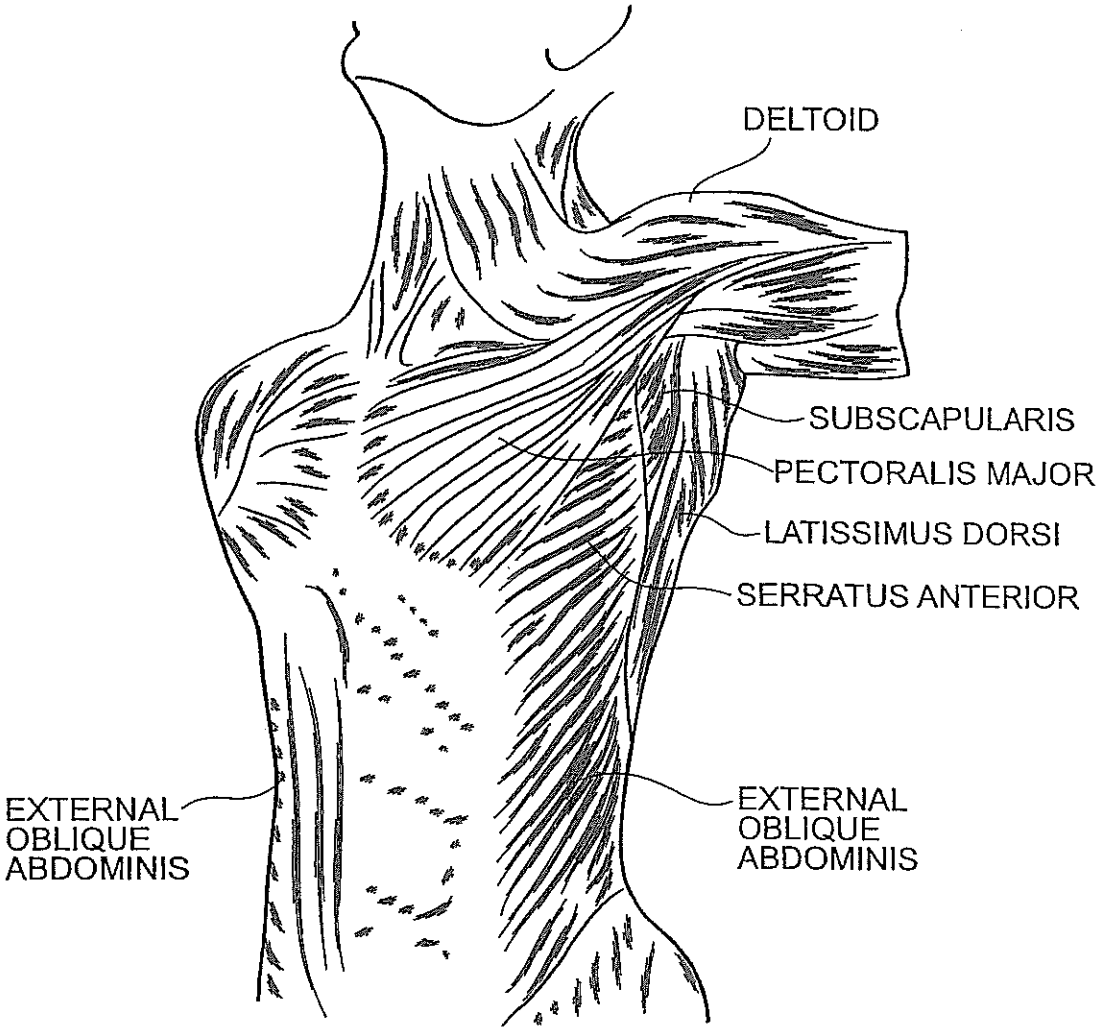
DELTOID
SUBSCAPULARIS
PECTORALIS MAJOR
LATISSIMUS DORSI
SERRATUS ANTERIOR
EXTERNAL OBLIQUE ABDOMINIS
EXTERNAL OBLIQUE ABDOMINIS

Fig.5

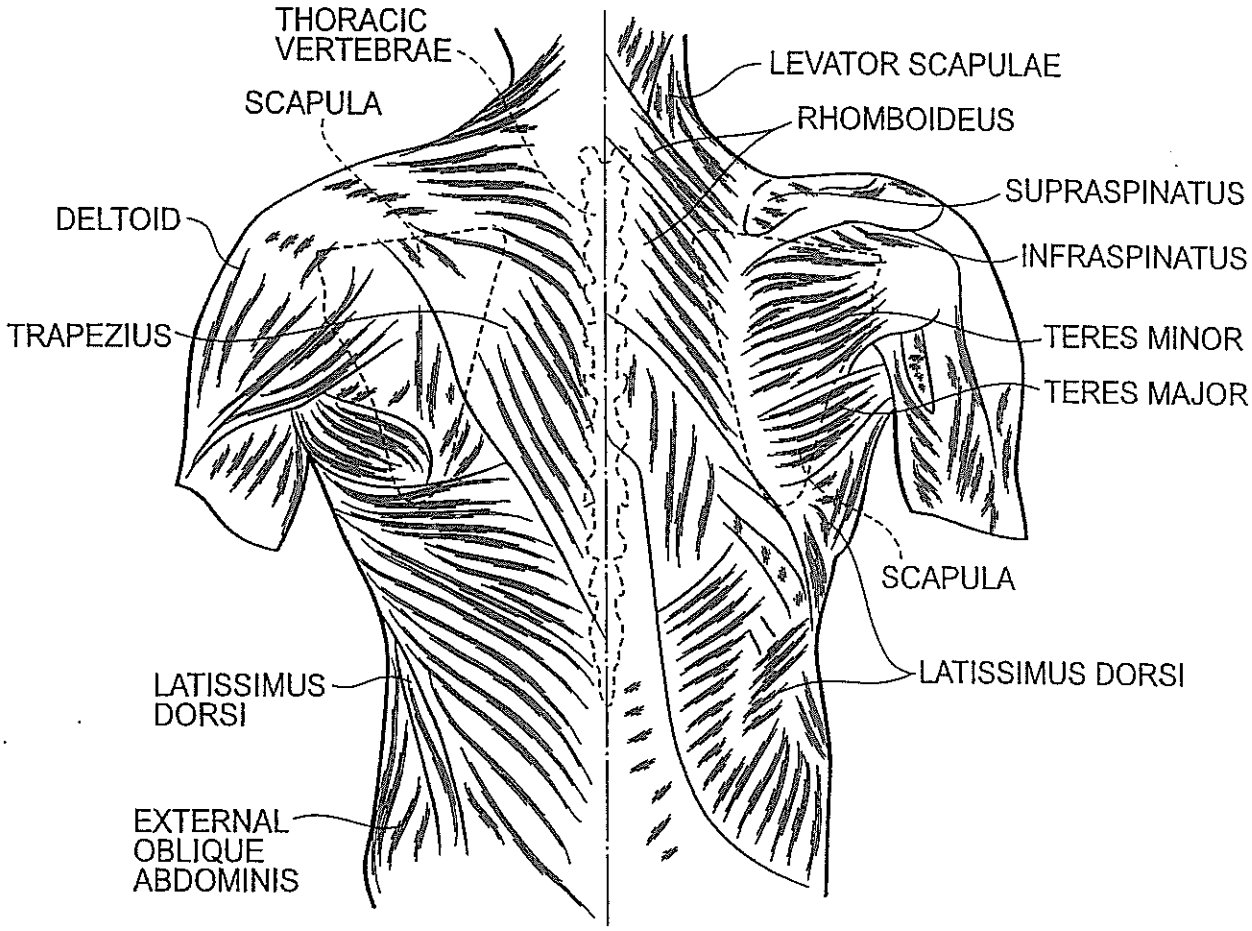
THORACIC VERTEBRAE
SCAPULA
DELTOID
TRAPEZIUS
LATISSIMUS DORSI
EXTERNAL OBLIQUE ABDOMINIS
LEVATOR SCAPULAE
RHOMBOIDEUS
SUPRASPINATUS
INFRASPINATUS
TERES MINOR
TERES MAJOR
SCAPULA
LATISSIMUS DORSI

Fig.6

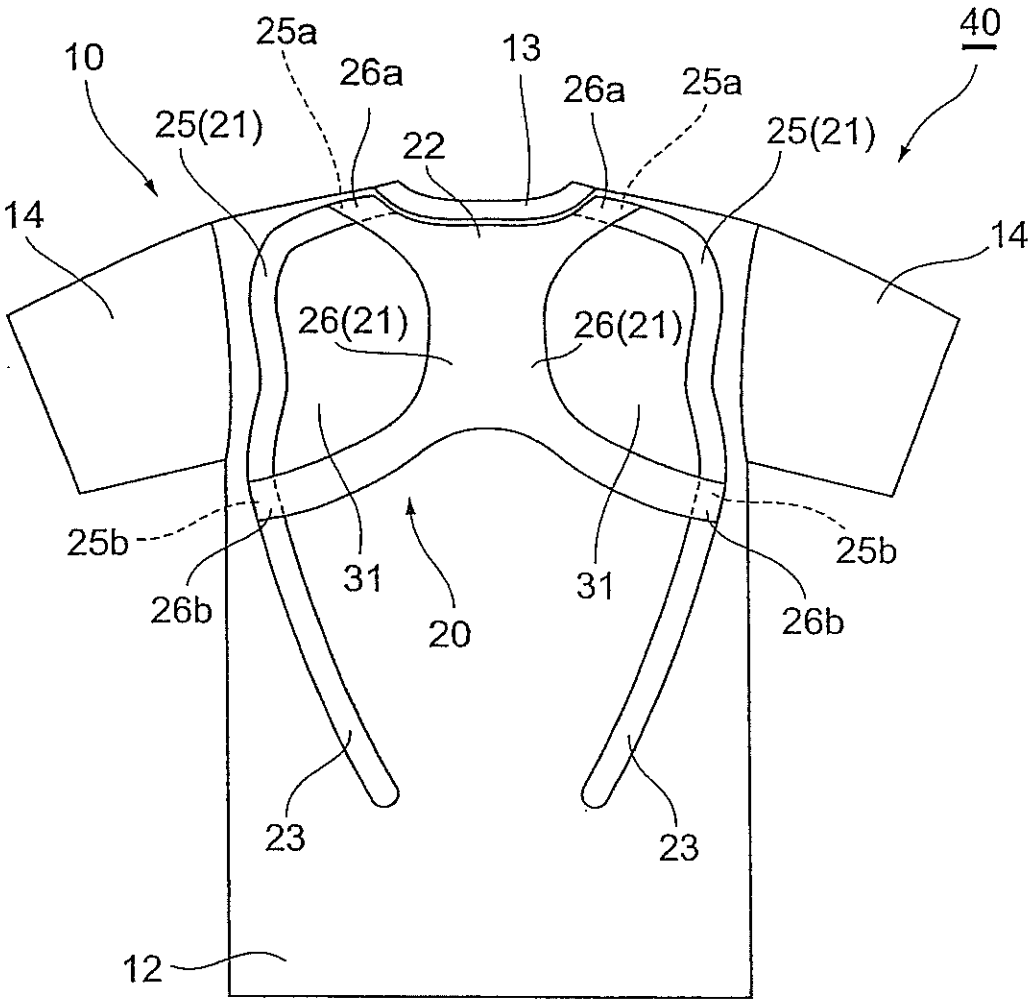
10
25a
26a
13
26a
25a
40
25(21)
22
25(21)
14
14
26(21)
26(21)
25b
25b
26b
31
20
31
26b
23
23
12

Fig.7

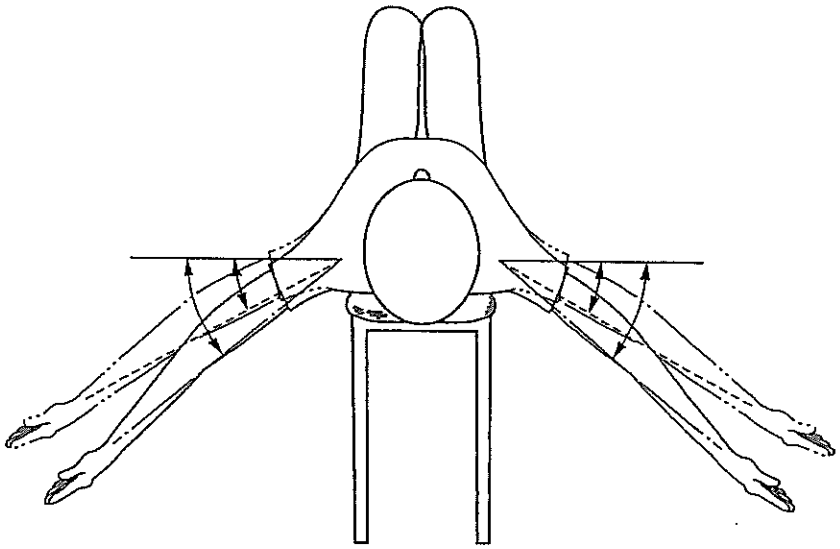

Fig.8

	COMPARATIVE EXAMPLE	WORKING EXAMPLE
A	39.27	41.47
B	21.56	22.99
C	24.82	27.13
D	36.28	37.69
Ave.	30.48	32.32

UNITS: °

Fig.9

(a)

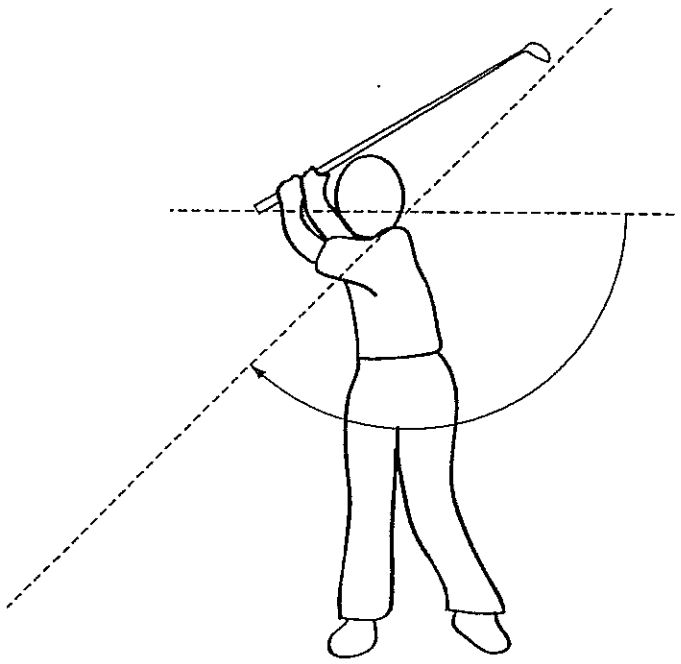

(b)

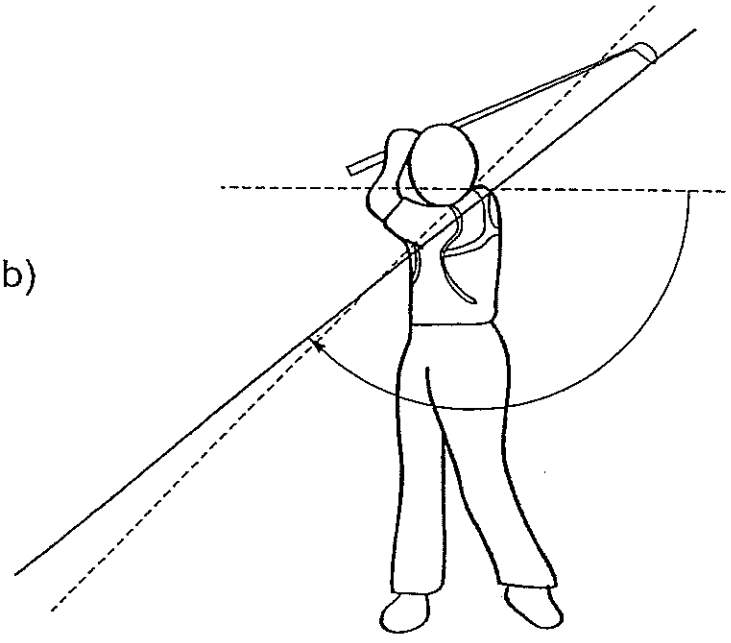

Fig.10

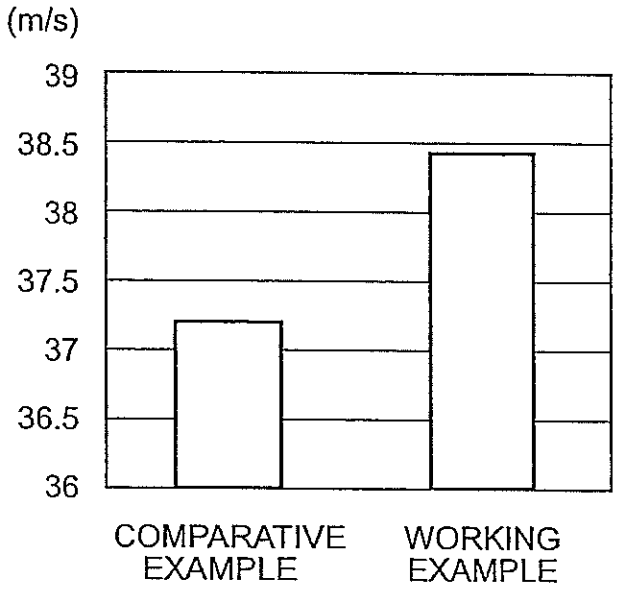
(m/s)
39
38.5
38
37.5
37
36.5
36
COMPARATIVE EXAMPLE
WORKING EXAMPLE

Fig.11

1. TAKE BACK EASIER

COMPARATIVE EXAMPLE	NEITHER	WORKING EXAMPLE
0 PERSONS	2 PERSONS	8 PERSONS

2. SHOULDER ROTATION EASIER

COMPARATIVE EXAMPLE	NEITHER	WORKING EXAMPLE
0 PERSONS	3 PERSONS	7 PERSONS

3. MORE COMFORTABLE TO WEAR

COMPARATIVE EXAMPLE	NEITHER	WORKING EXAMPLE
1 PERSONS	1 PERSONS	8 PERSONS