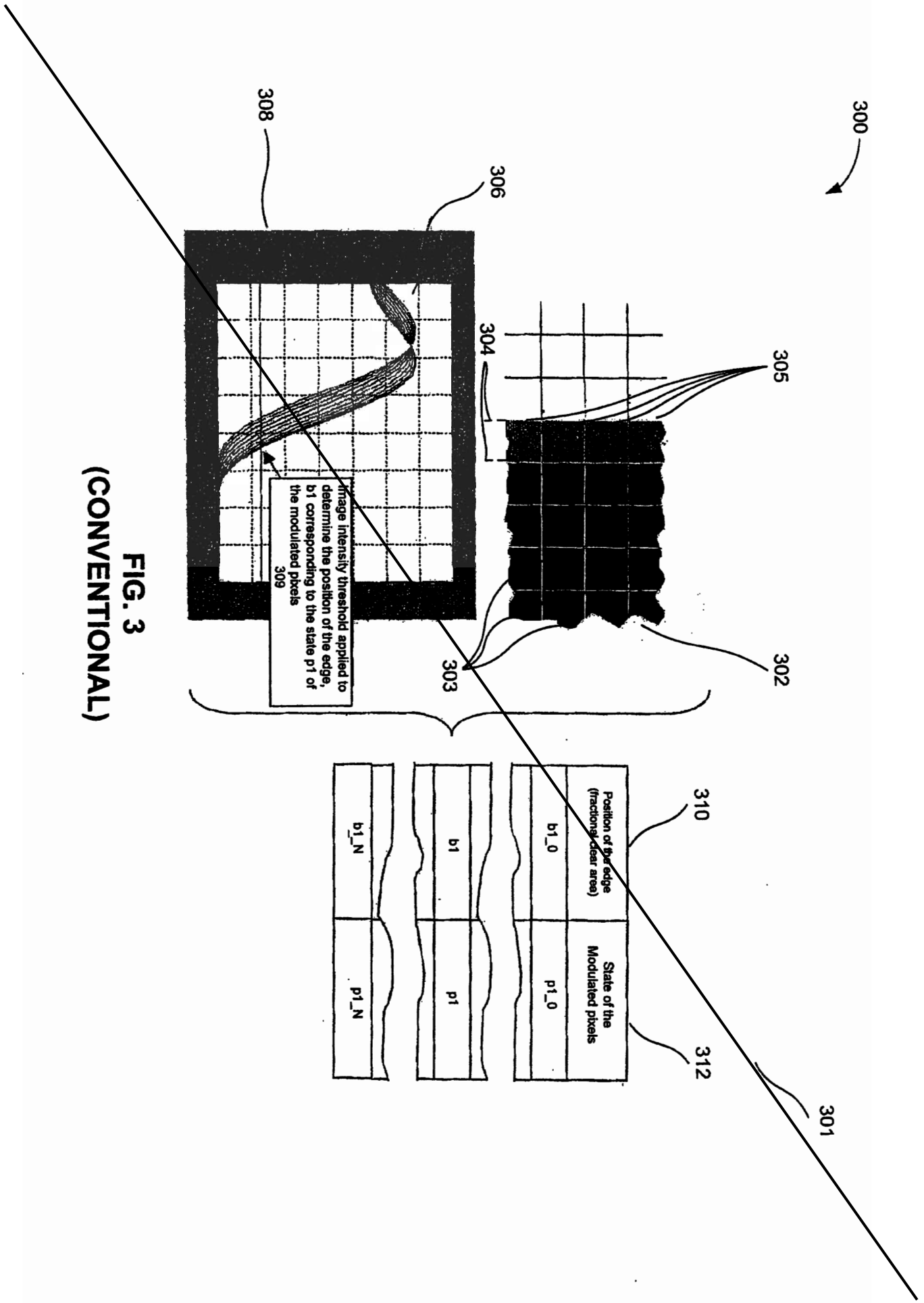

FIG. 3
(CONVENTIONAL)

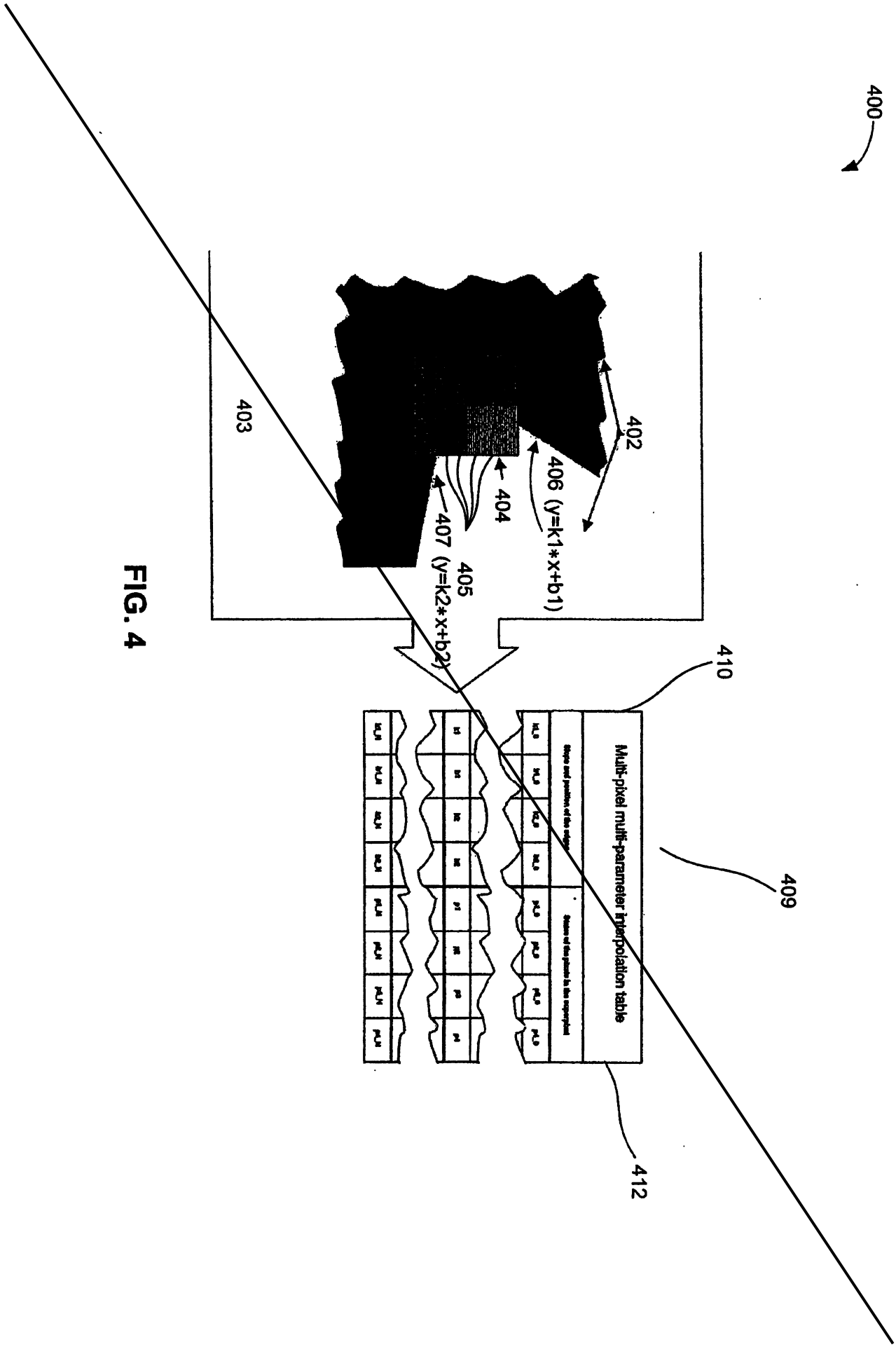
400
403
402
406 (y=k1*x+b1)
404
407 (y=k2*x+b2)
405
410
Multi-pixel multi-parameter interpolation table
409
412

FIG. 4

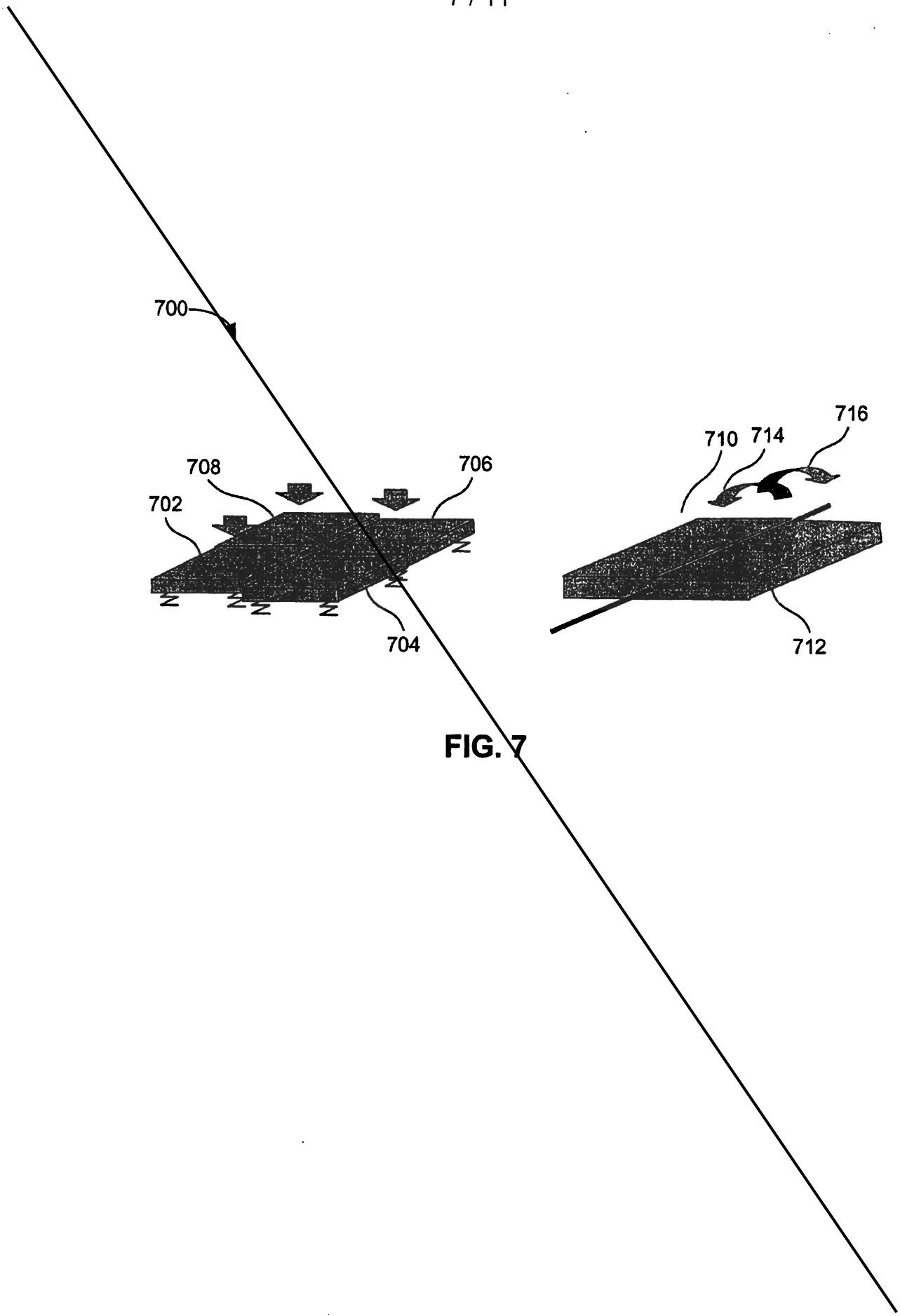

FIG. 7

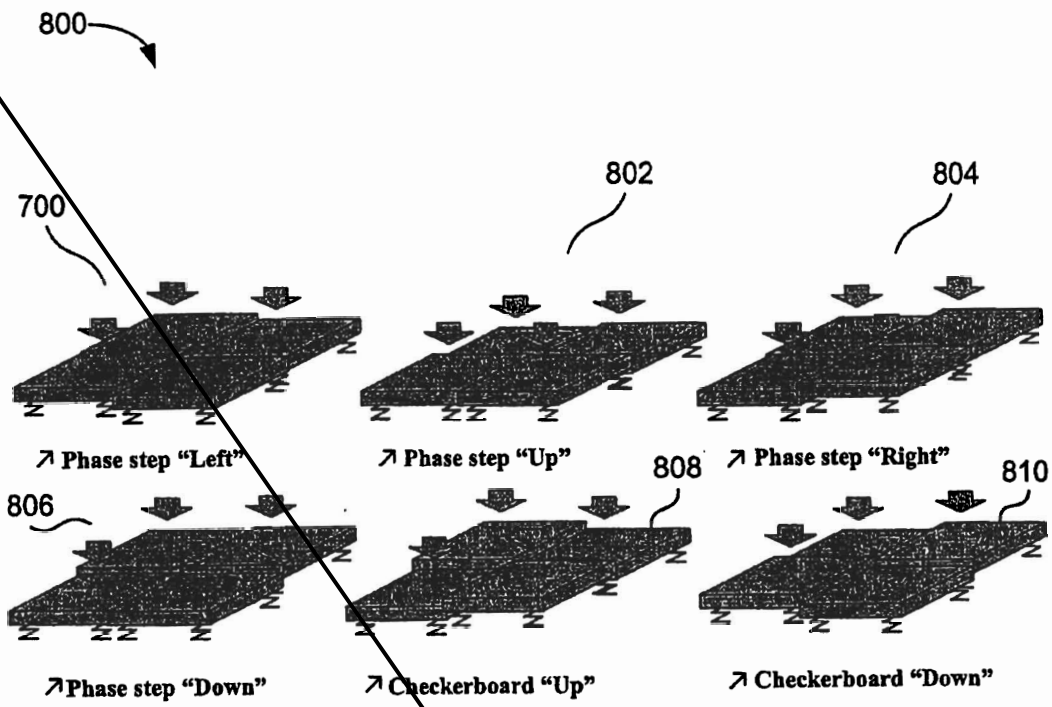
800
700
802
804
Phase step "Left"
Phase step "Up"
Phase step "Right"
806
808
810
Phase step "Down"
Checkerboard "Up"
Checkerboard "Down"

FIG. 8

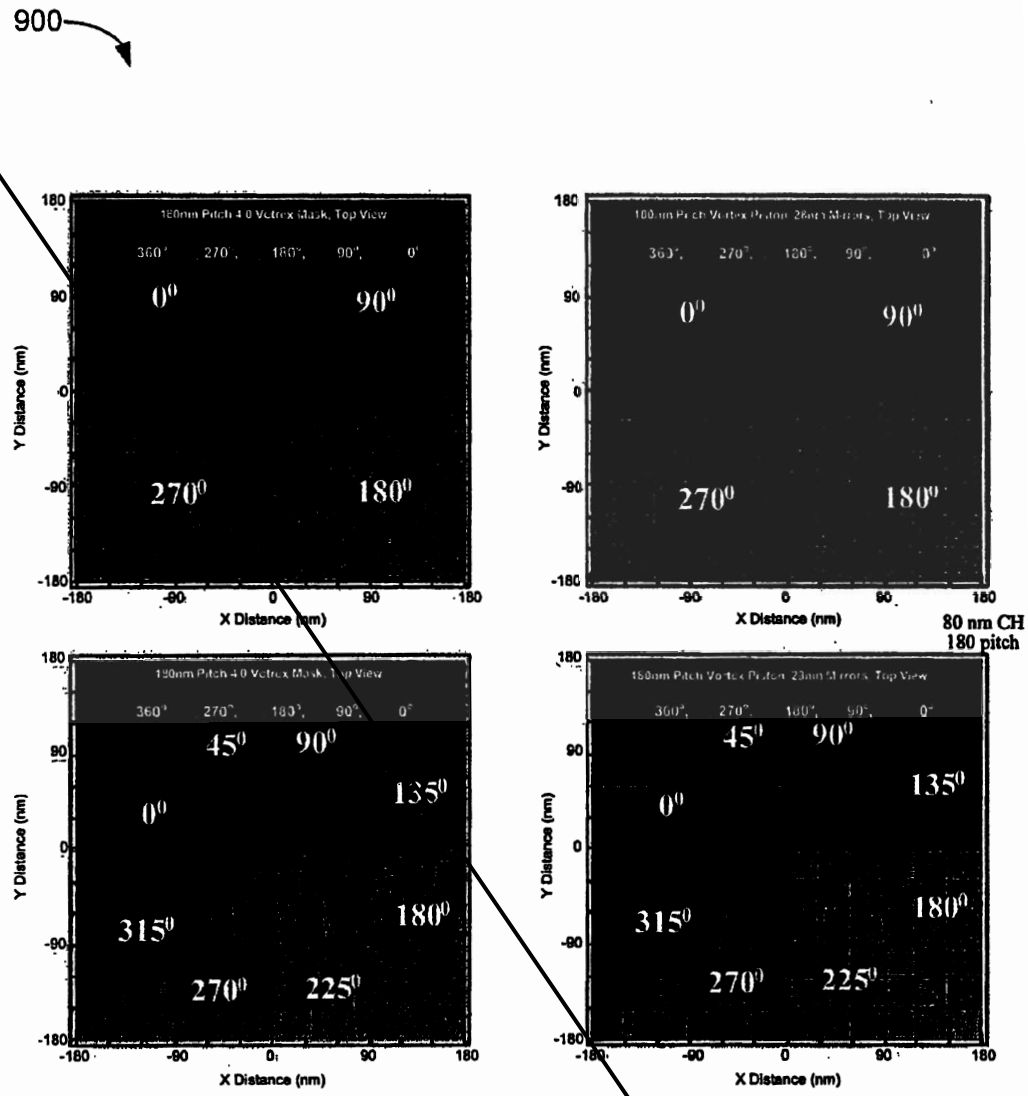
900
180nm Pitch 4.0 Vetrex Mask, Top View
360°, 270°, 180°, 90°, 0°
0°
90°
270°
180°
Y Distance (nm)
X Distance (nm)
180
90
0
-90
-180
180nm Pitch Vortex Proton 28nm Mirrors, Top View
80 nm CH
180 pitch
45°
135°
315°
225°

FIG. 9

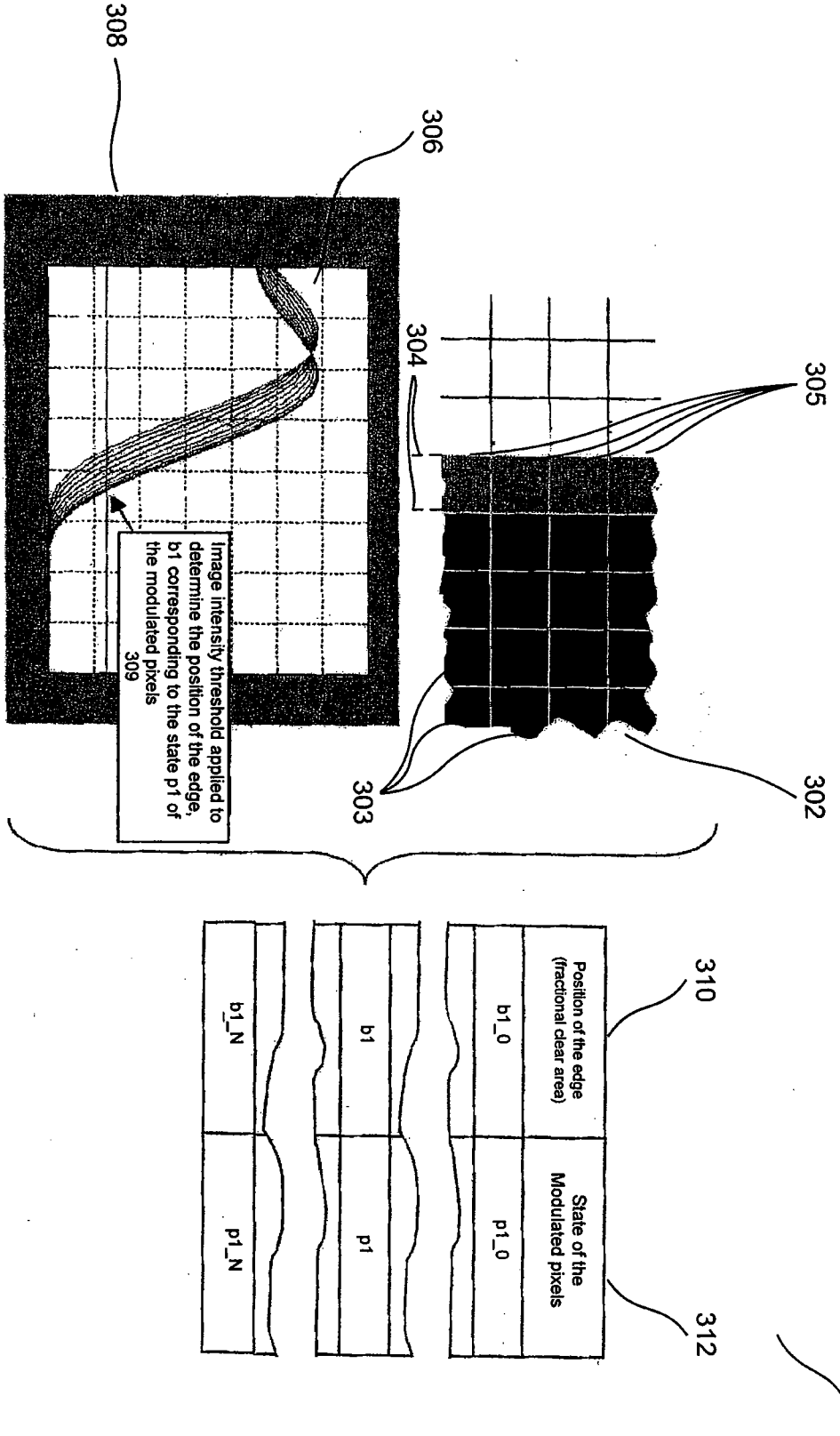

FIG. 3
(CONVENTIONAL)

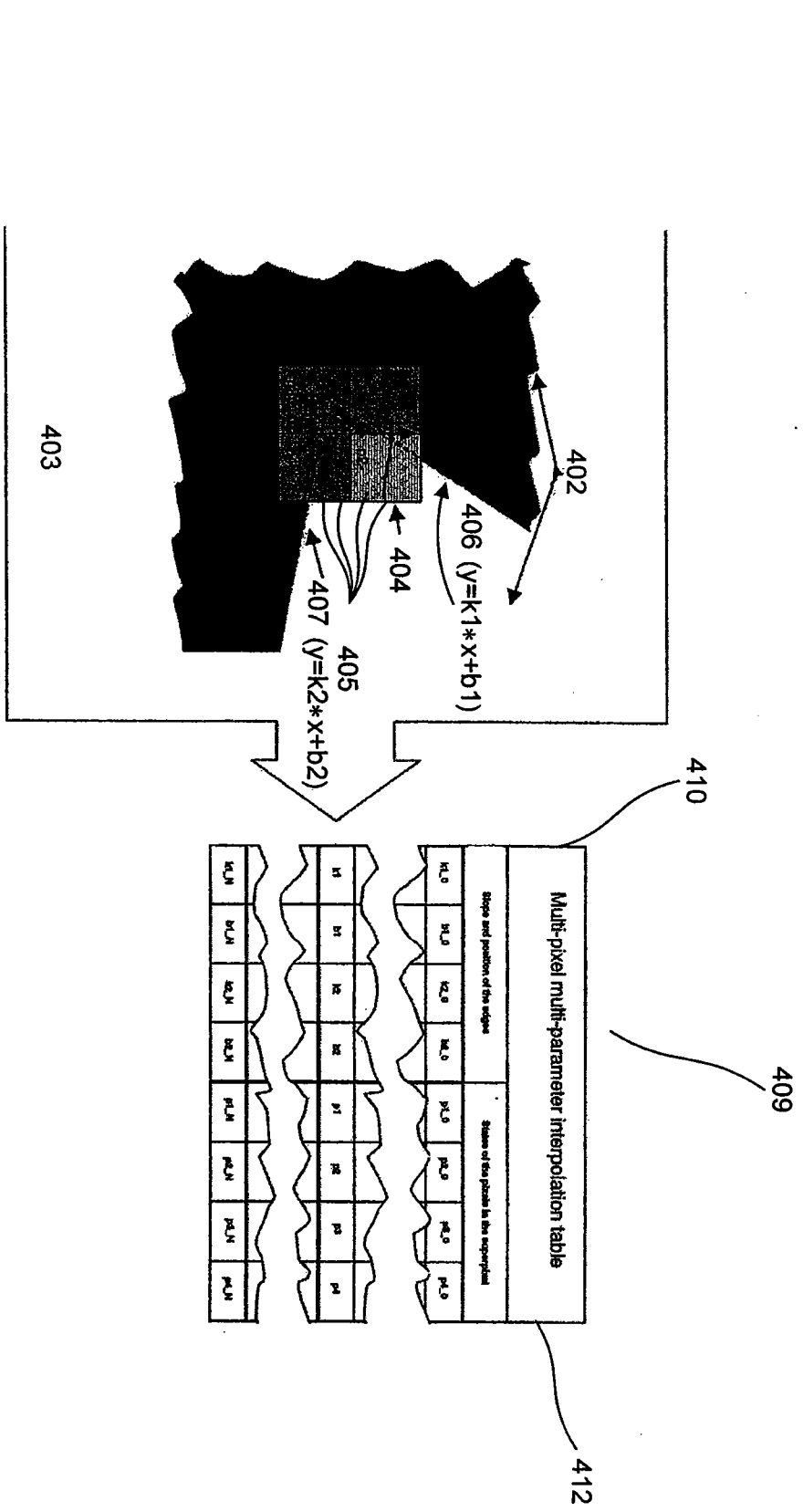
400
403
402
406 (y=k1*x+b1)
404
407 (y=k2*x+b2)
405
410
Multi-pixel multi-parameter interpolation table
409
412

FIG. 4

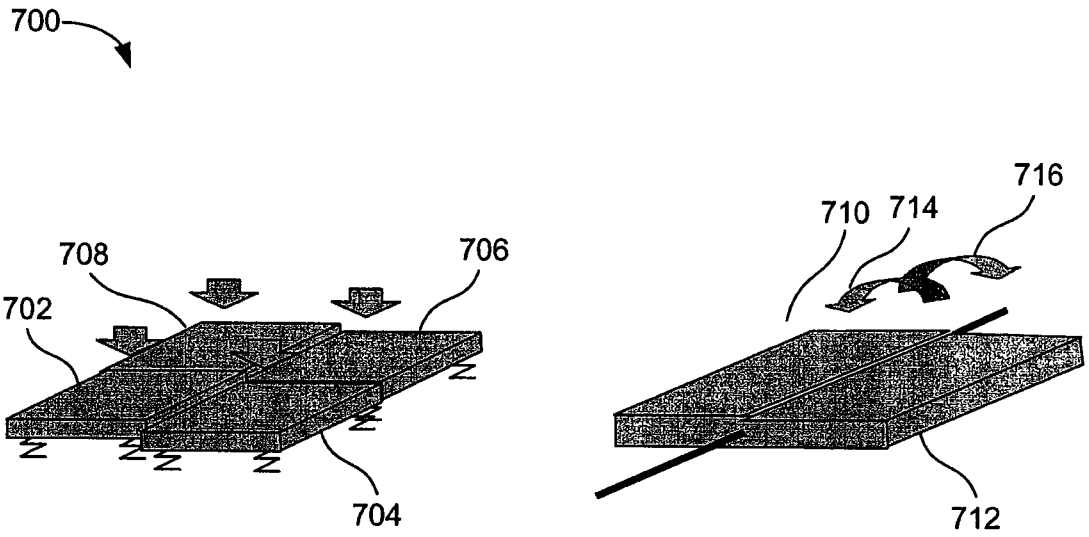

FIG. 7

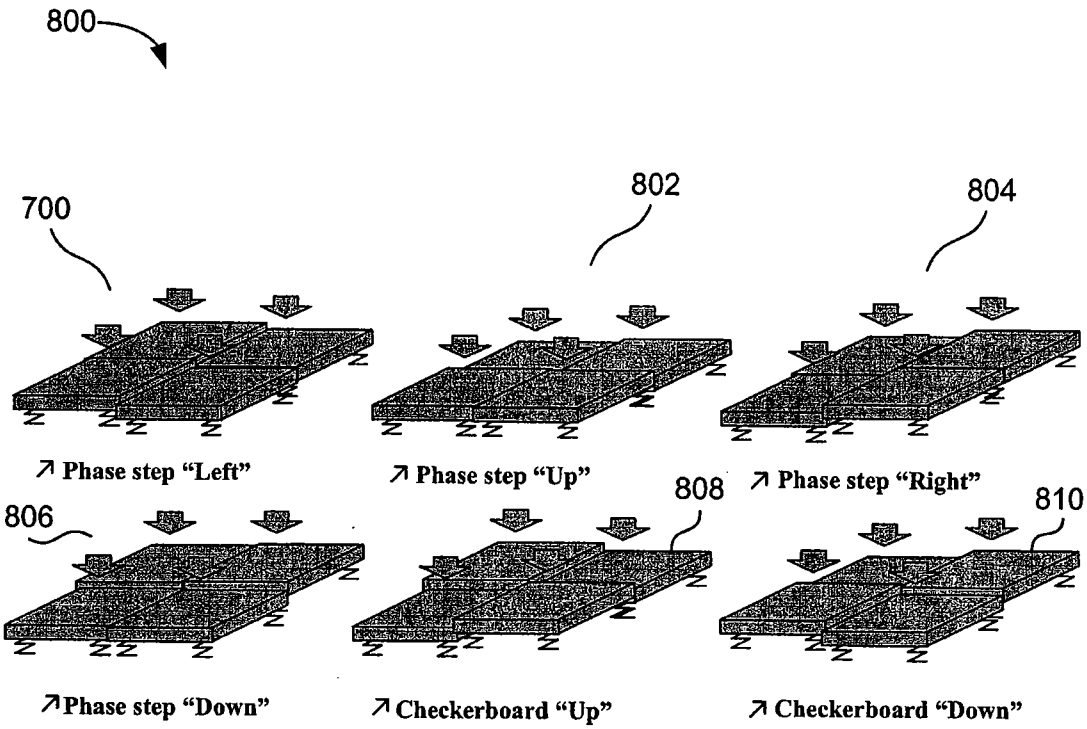
800
700
802
804
Phase step "Left"
Phase step "Up"
Phase step "Right"
806
808
810
Phase step "Down"
Checkerboard "Up"
Checkerboard "Down"

FIG. 8

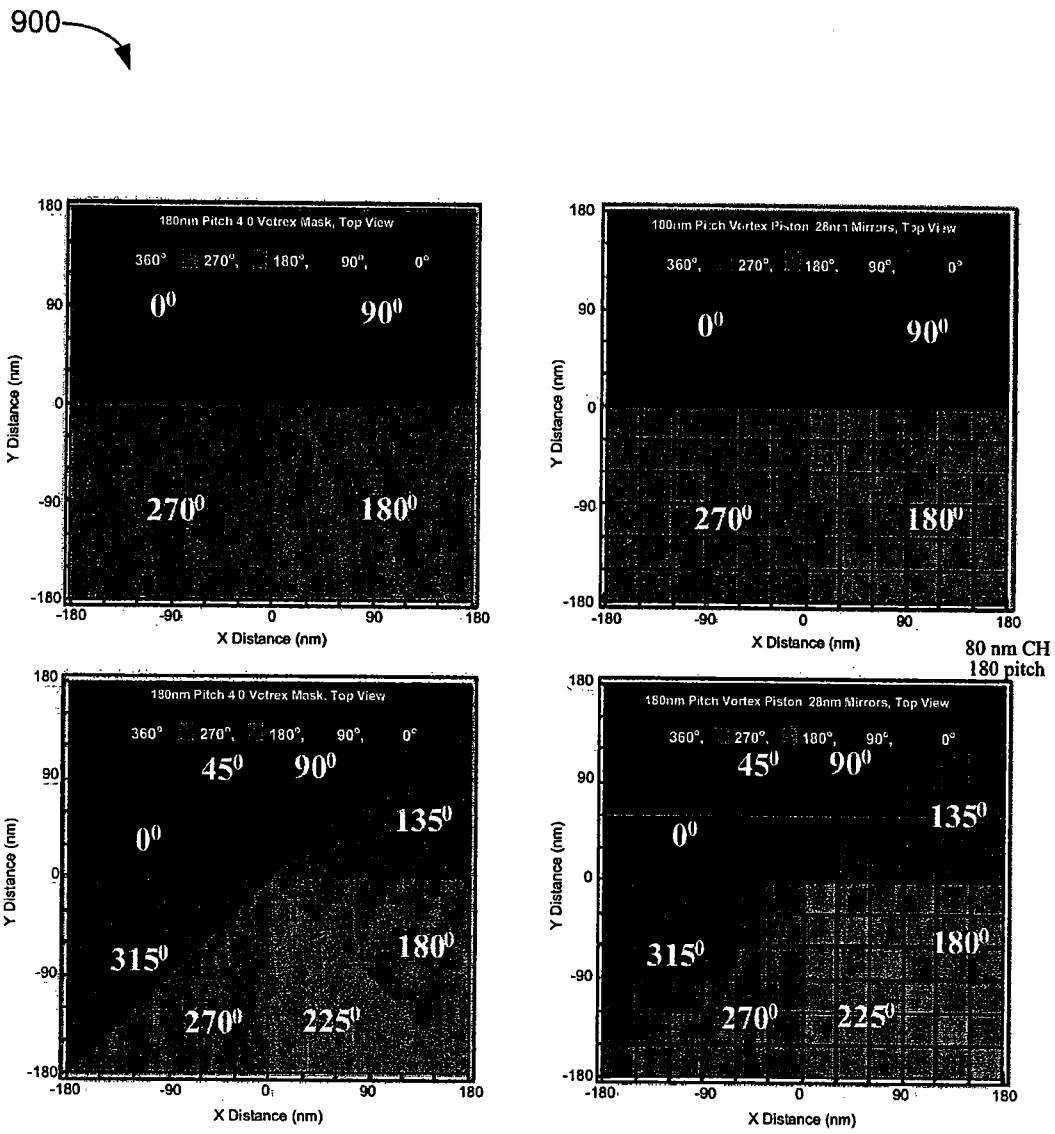
900
180nm Pitch 4 0 Votrex Mask, Top View
360°, 270°, 180°, 90°, 0°
0⁰
90⁰
270⁰
180⁰
Y Distance (nm)
X Distance (nm)
100nm Pitch Vortex Piston 28nm Mirrors, Top View
80 nm CH
180 pitch
180nm Pitch 4 0 Votrex Mask, Top View
45⁰
135⁰
315⁰
225⁰
180nm Pitch Vortex Piston 28nm Mirrors, Top View

FIG. 9