100

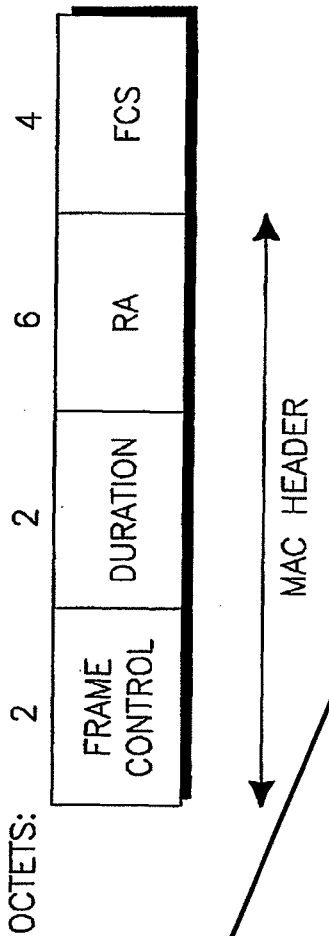

FIG.1

200

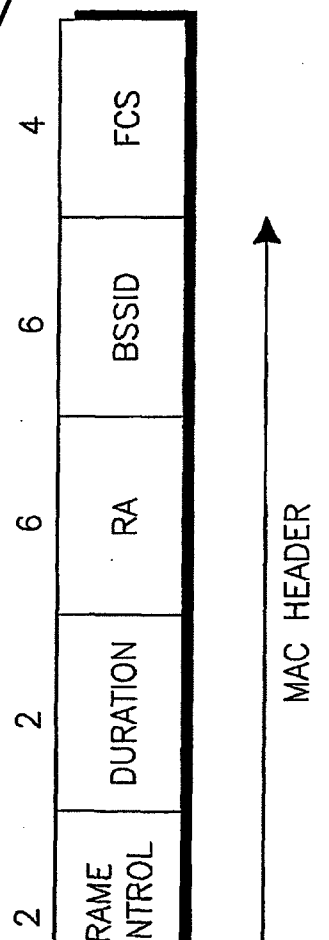

FIG.2

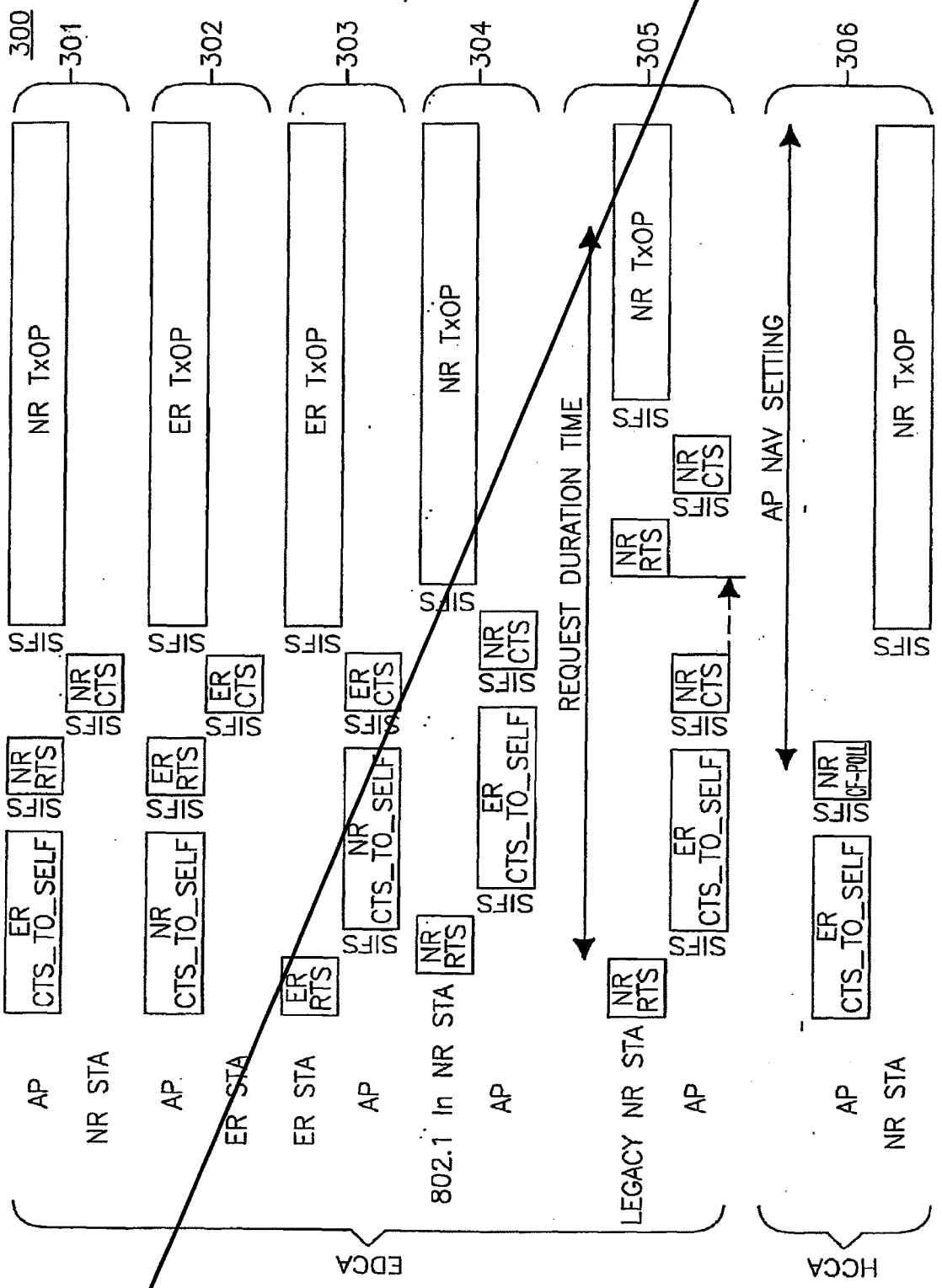
300
301
302
303
304
305
306
NR TxOP
ER TxOP
NR TxOP
ER TxOP
NR TxOP
NR TxOP
SIFS
NR CTS
ER CTS
NR RTS
ER RTS
ER CTS_TO_SELF
NR CTS_TO_SELF
ER CTS_TO_SELF
NR CTS_TO_SELF
NR RTS
ER RTS
NR CTS
ER CTS
NR RTS
NR CTS
ER CTS_TO_SELF
NR CF-POLL
REQUEST DURATION TIME
AP NAV SETTING
AP
NR STA
ER STA
802.1 In NR STA
LEGACY NR STA
EDCA
HCCA

FIG.3

400

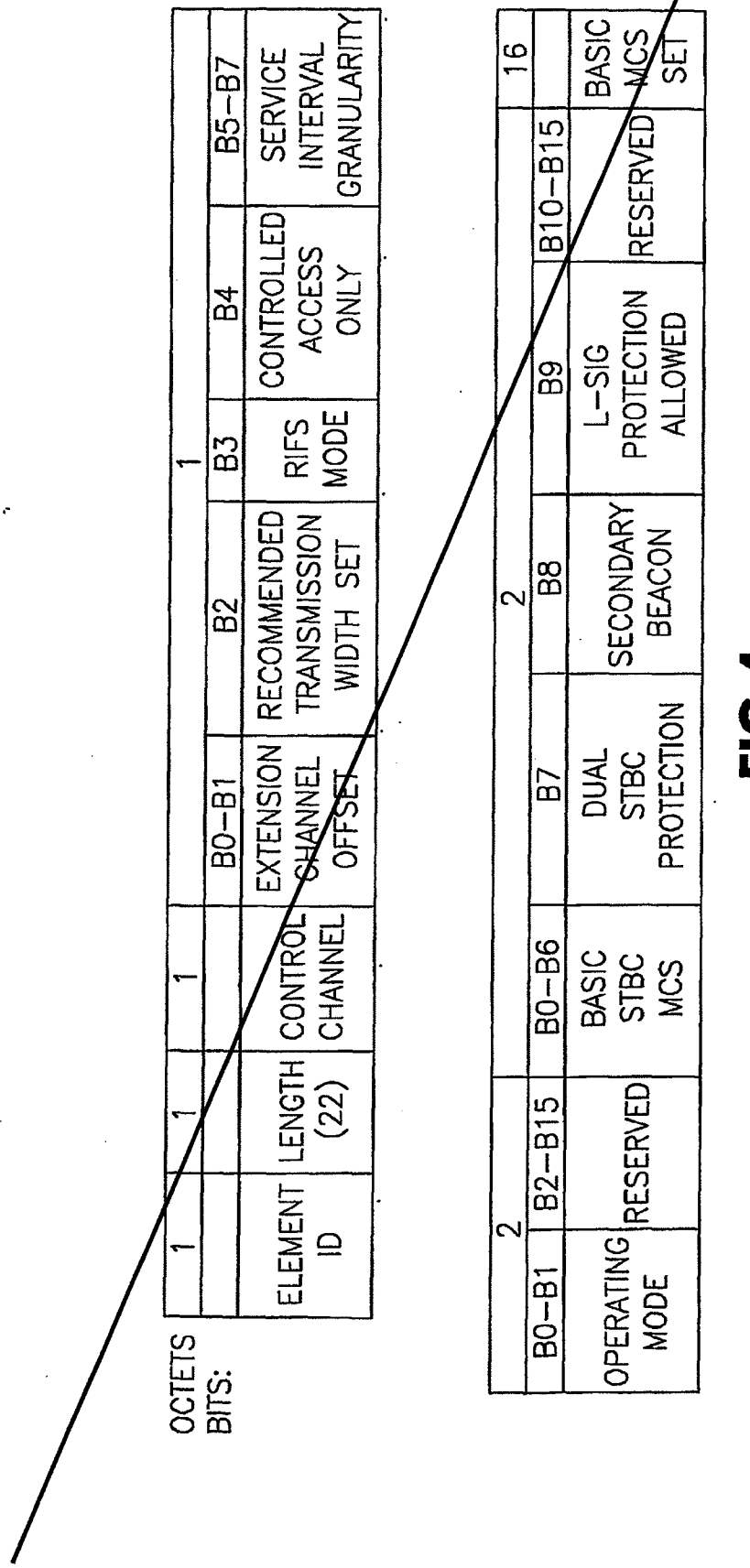
OCTETS
BITS:
1
1
1
1
ELEMENT ID
LENGTH (22)
CONTROL CHANNEL
B0–B1
EXTENSION CHANNEL OFFSET
B2
RECOMMENDED TRANSMISSION WIDTH SET
B3
RIFS MODE
B4
CONTROLLED ACCESS ONLY
B5–B7
SERVICE INTERVAL GRANULARITY
2
2
16
B0–B1
OPERATING MODE
B2–B15
RESERVED
B0–B6
BASIC STBC MCS
B7
DUAL STBC PROTECTION
B8
SECONDARY BEACON
B9
L–SIG PROTECTION ALLOWED
B10–B15
RESERVED
BASIC MCS SET

FIG.4

500

	RESERVED	MORE PSMP	DESCRIPTOR END	STA INFO
BITS:	6	1	9	64*M

FIG.5

600

	TIDS/TSIDS SET	STA ID	DLT START OFFSET	DLT DURATION	ULT START OFFSET	ULT DURATION
BITS:	8	16	11	8	11	10

FIG.6

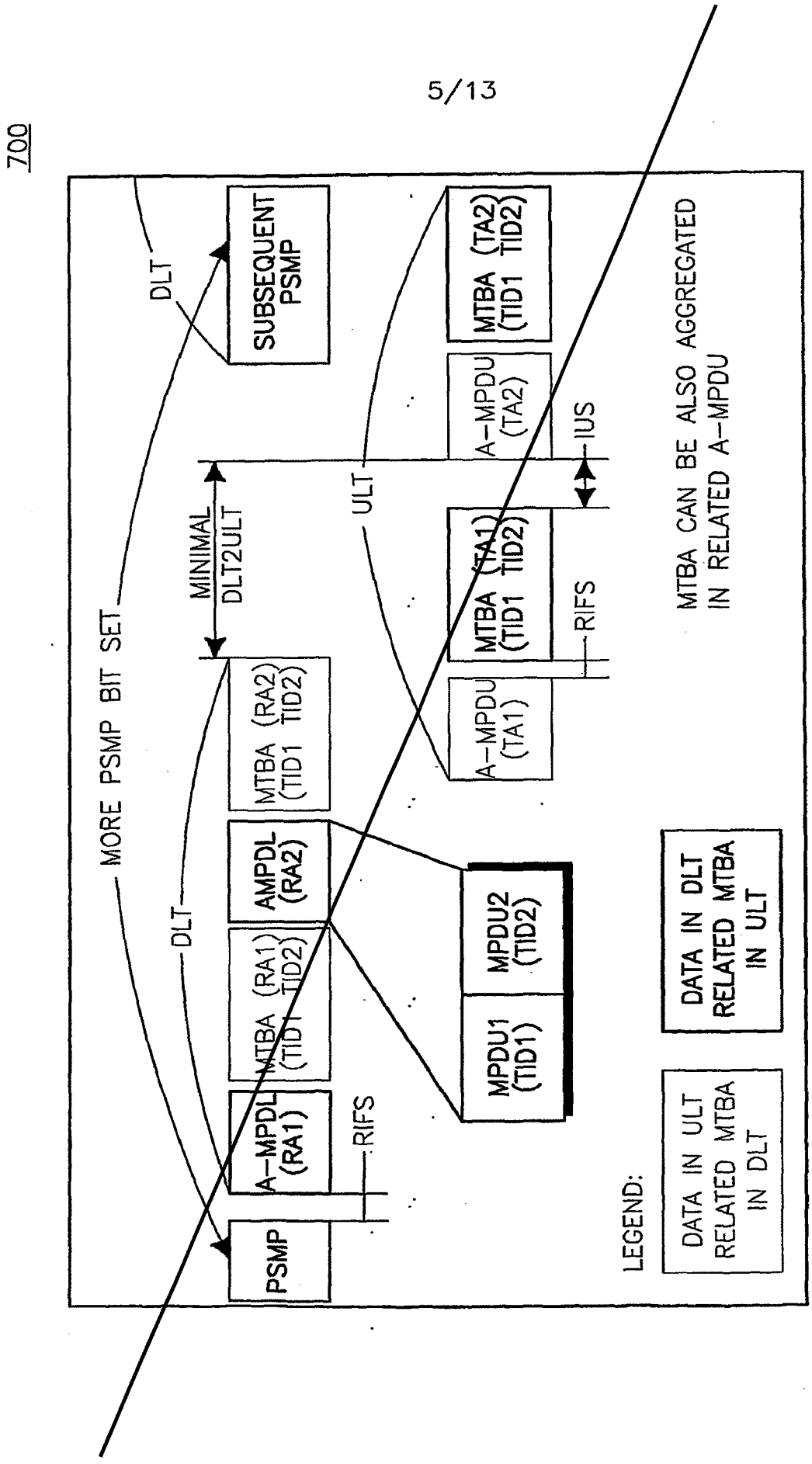
700
MORE PSMP BIT SET
DLT
SUBSEQUENT PSMP
MINIMAL DLT2ULT
ULT
MTBA (TA2) (TID1 TID2)
A-MPDU (TA2)
IUS
MTBA (TA1) (TID1 TID2)
RIFS
A-MPDU (TA1)
MTBA CAN BE ALSO AGGREGATED IN RELATED A-MPDU
DLT
MTBA (RA2) (TID1 TID2)
AMPDL (RA2)
MTBA (RA1) (TID1 TID2)
MPDU2 (TID2)
MPDU1 (TID1)
A-MPDL (RA1)
RIFS
PSMP
LEGEND:
DATA IN ULT RELATED MTBA IN DLT
DATA IN DLT RELATED MTBA IN ULT

FIG.7

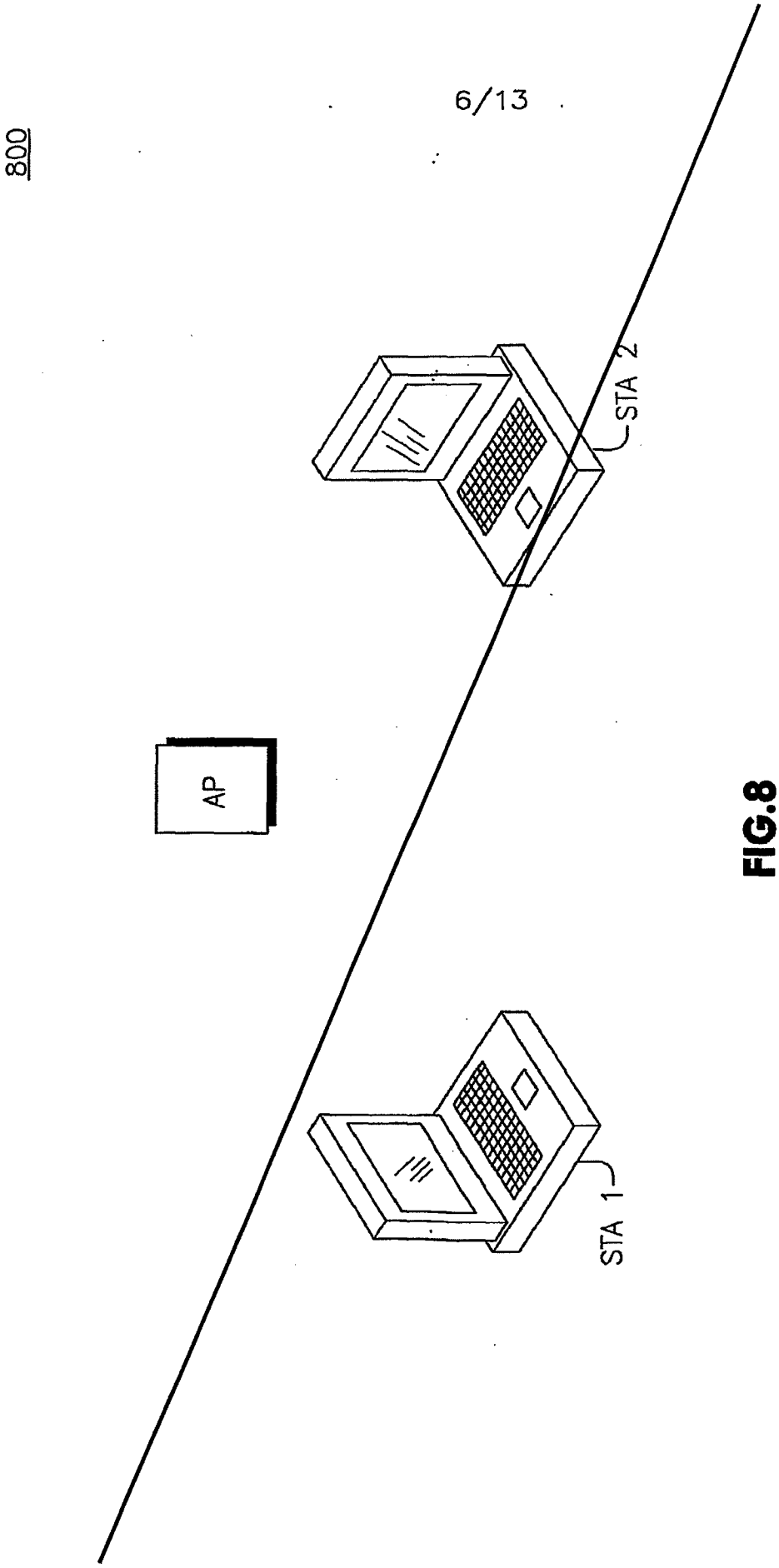

FIG.8

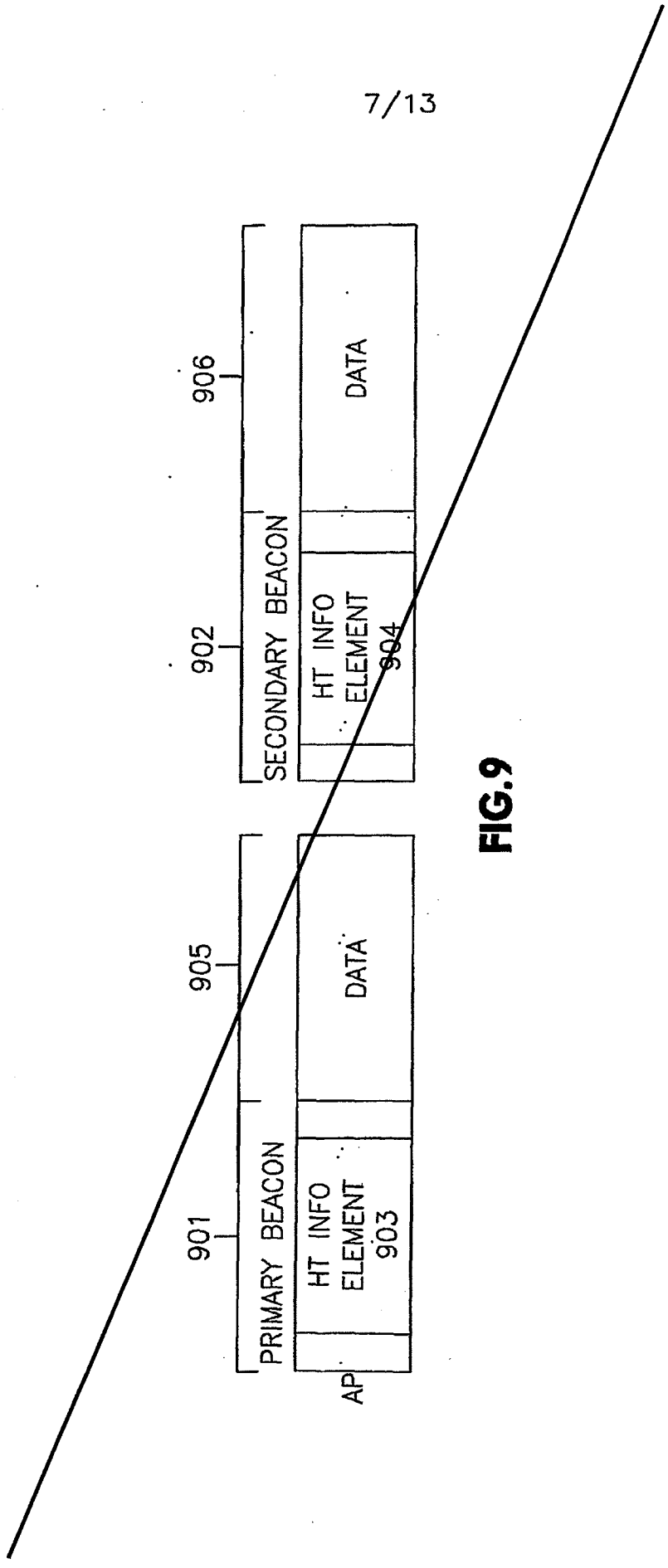
900
AP
PRIMARY BEACON
HT INFO ELEMENT 903
DATA
SECONDARY BEACON
HT INFO ELEMENT 904
DATA
901
905
902
906

FIG.9

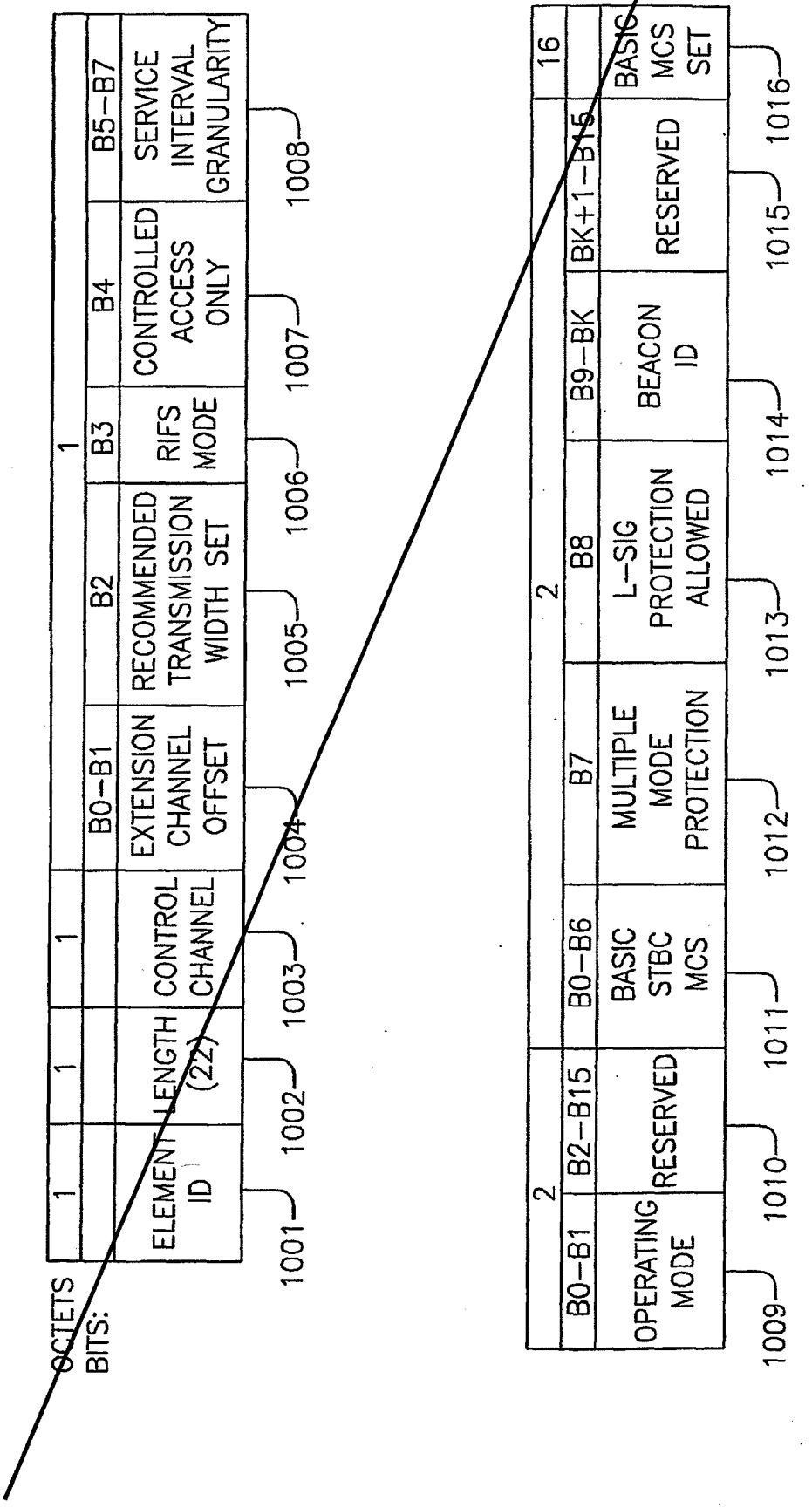
1000
OCTETS
BITS:
1
1
1
1
1
2
2
16
B0–B1
B2–B15
B0–B6
B7
B8
B9–BK
BK+1–B15
B0–B7
B2
B3
B4
B5–B7
ELEMENT ID
LENGTH (22)
CONTROL CHANNEL
EXTENSION CHANNEL OFFSET
RECOMMENDED TRANSMISSION WIDTH SET
RIFS MODE
CONTROLLED ACCESS ONLY
SERVICE INTERVAL GRANULARITY
OPERATING MODE
RESERVED
BASIC STBC MCS
MULTIPLE MODE PROTECTION
L-SIG PROTECTION ALLOWED
BEACON ID
RESERVED
BASIC MCS SET
1001
1002
1003
1004
1005
1006
1007
1008
1009
1010
1011
1012
1013
1014
1015
1016

FIG.10

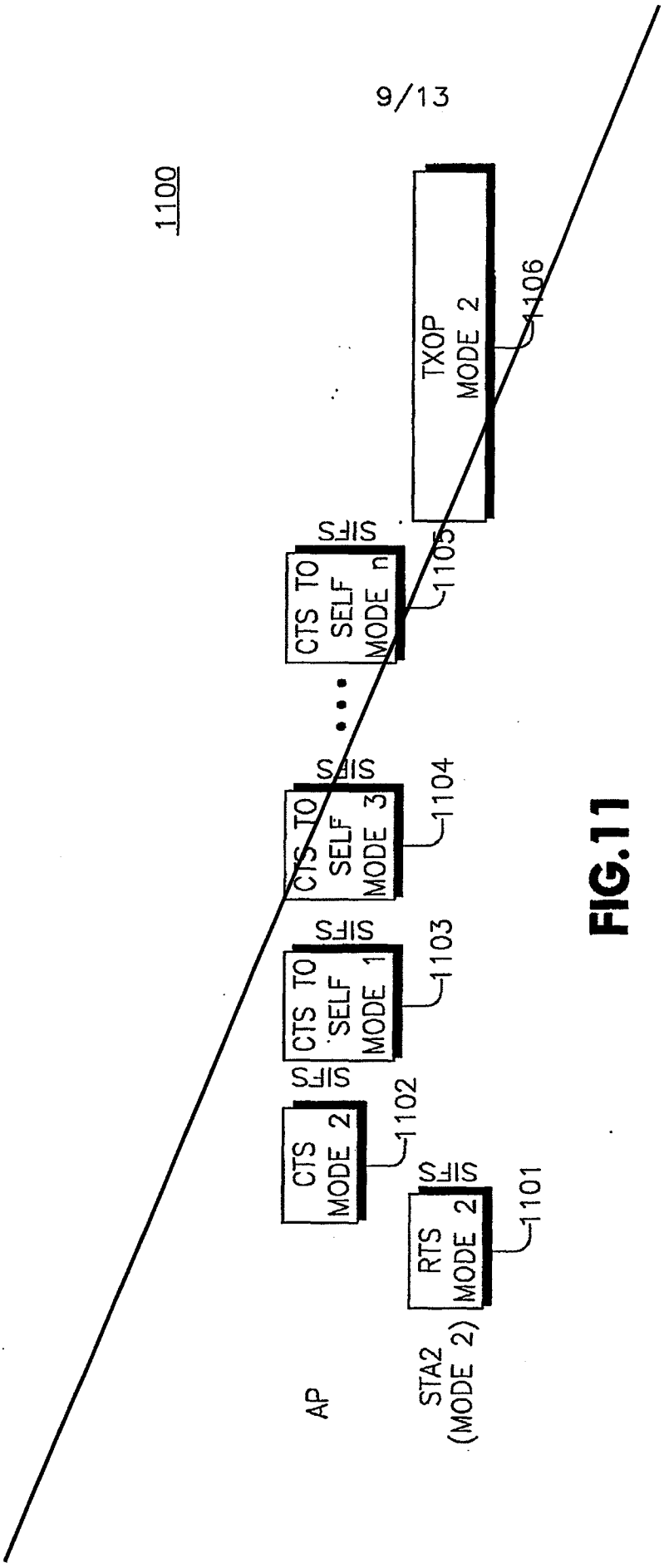
1100
AP
STA2
(MODE 2)
RTS
MODE 2
1101
SIFS
CTS
MODE 2
1102
SIFS
CTS TO
SELF
MODE 1
1103
SIFS
CTS TO
SELF
MODE 3
1104
SIFS
CTS TO
SELF
MODE n
1105
SIFS
TXOP
MODE 2
1106

FIG.11

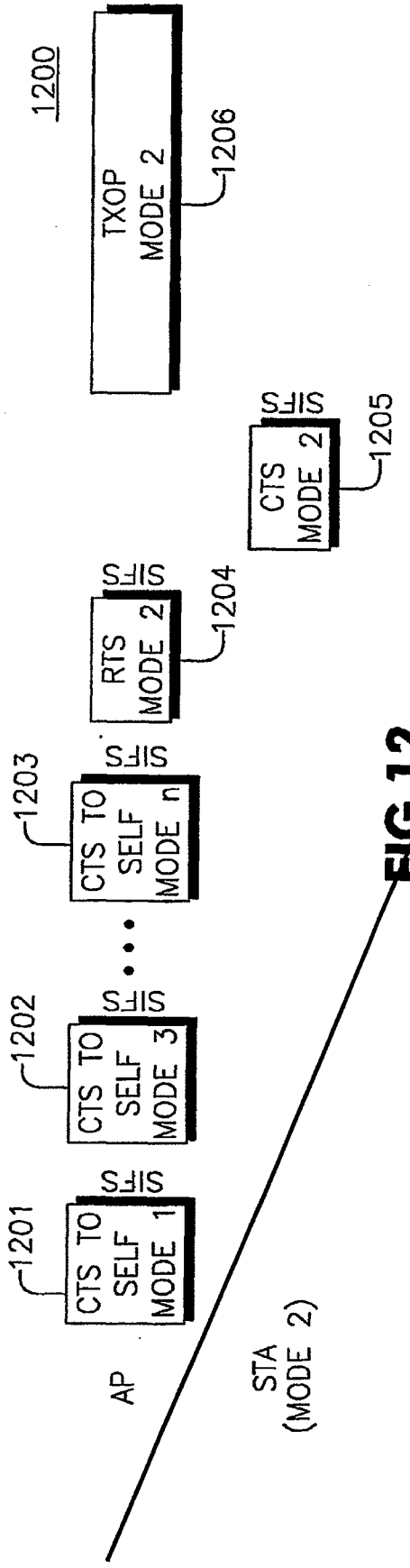
1200
TXOP MODE 2
1206
SIFS
CTS MODE 2
1205
SIFS
RTS MODE 2
1204
SIFS
CTS TO SELF MODE n
1203
SIFS
CTS TO SELF MODE 3
1202
SIFS
CTS TO SELF MODE 1
1201
AP
STA (MODE 2)

FIG.12

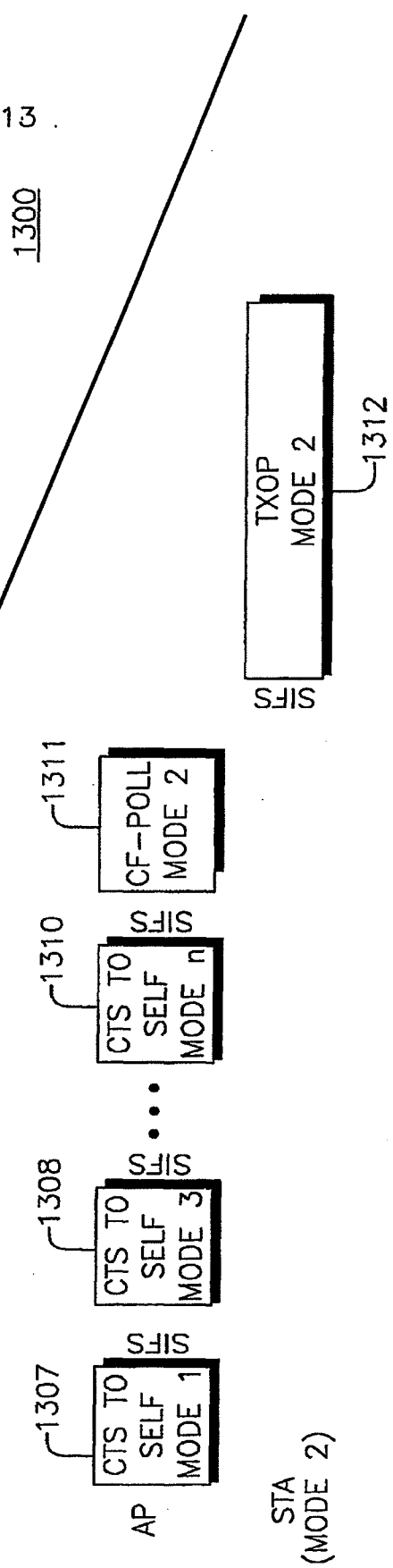
1300
TXOP MODE 2
1312
SIFS
CF-POLL MODE 2
1311
SIFS
CTS TO SELF MODE n
1310
SIFS
CTS TO SELF MODE 3
1308
SIFS
CTS TO SELF MODE 1
1307
AP
STA (MODE 2)

FIG.13

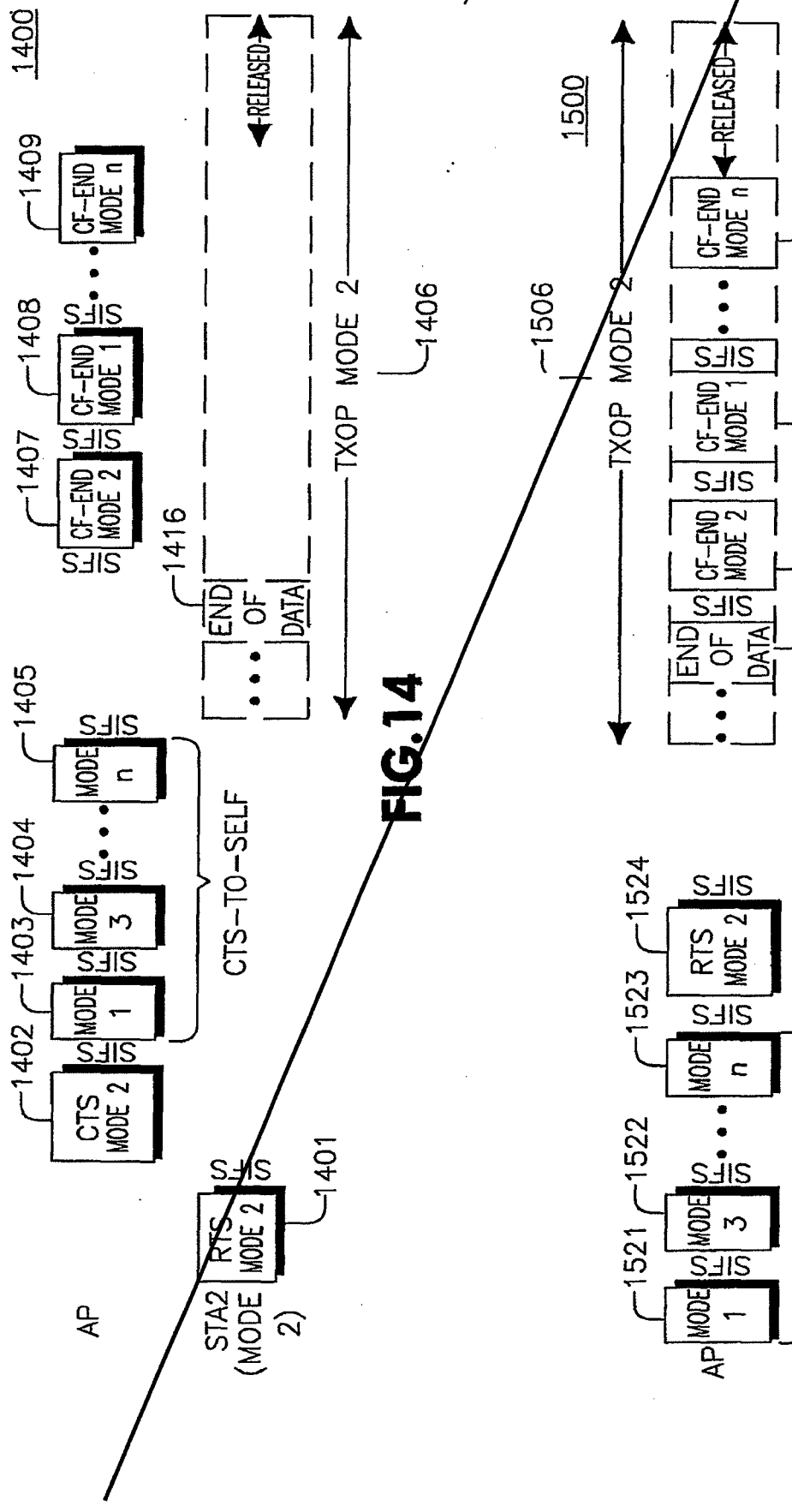
1400
AP
STA2 (MODE 2)
RTS MODE 2
SIFS
1401
CTS MODE 2
1402
MODE 1
1403
MODE 3
1404
MODE n
1405
CTS-TO-SELF
CF-END MODE 2
1407
CF-END MODE 1
1408
CF-END MODE n
1409
1416
END OF DATA
RELEASED
TXOP MODE 2
1406

FIG.14

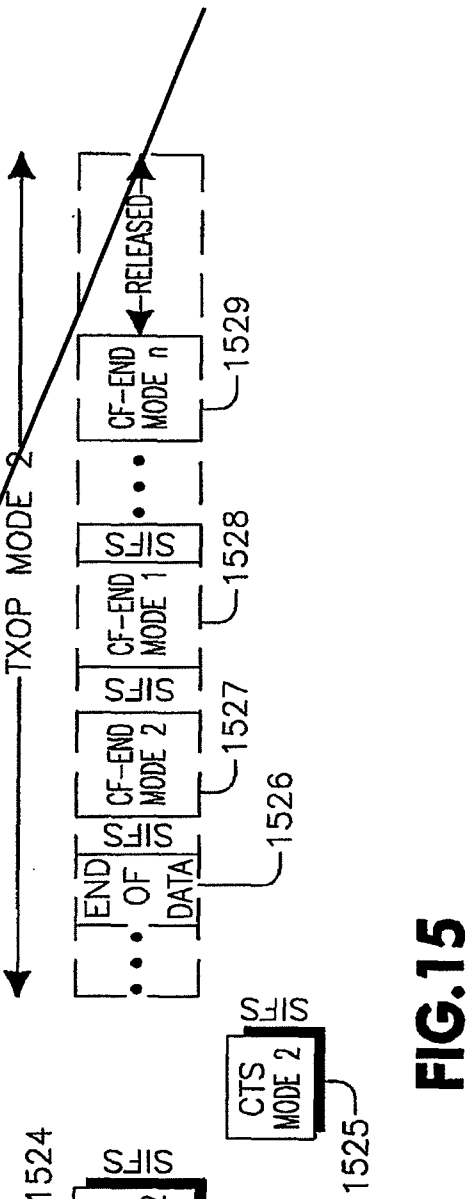
1500
AP
STA2 (MODE 2)
MODE 1
1521
MODE 3
1522
MODE n
1523
RTS MODE 2
1524
CTS MODE 2
1525
CTS-TO-SELF
END OF DATA
1526
CF-END MODE 2
1527
CF-END MODE 1
1528
CF-END MODE n
1529
RELEASED
TXOP MODE 2
1506

FIG.15

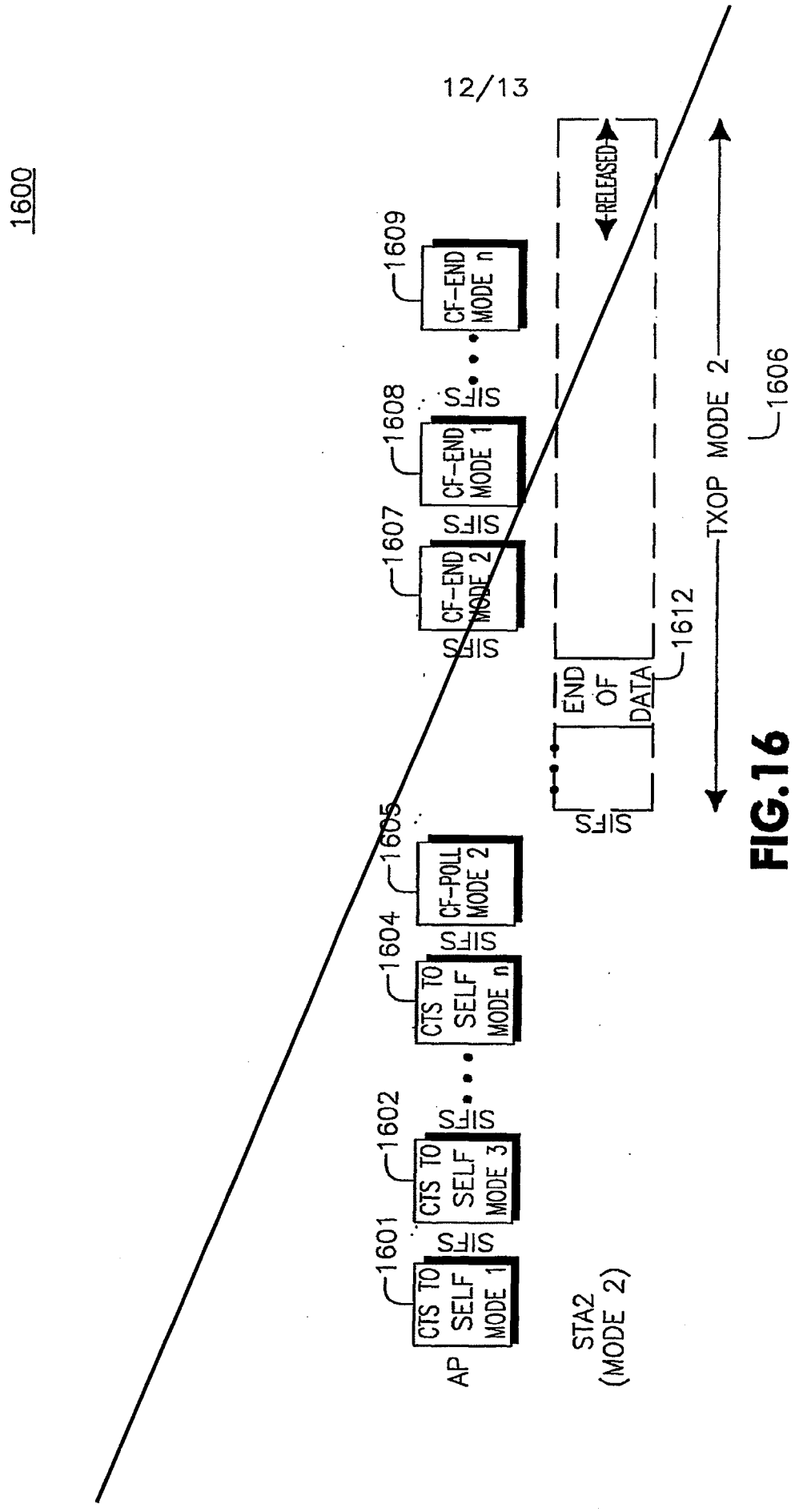
1600
AP
STA2
(MODE 2)
CTS TO SELF MODE 1
1601
SIFS
CTS TO SELF MODE 3
1602
SIFS
CTS TO SELF MODE n
1604
SIFS
CF-POLL MODE 2
1605
SIFS
CF-END MODE 2
1607
SIFS
CF-END MODE 1
1608
SIFS
CF-END MODE n
1609
SIFS
END OF DATA
1612
RELEASED
TXOP MODE 2
1606

FIG.16

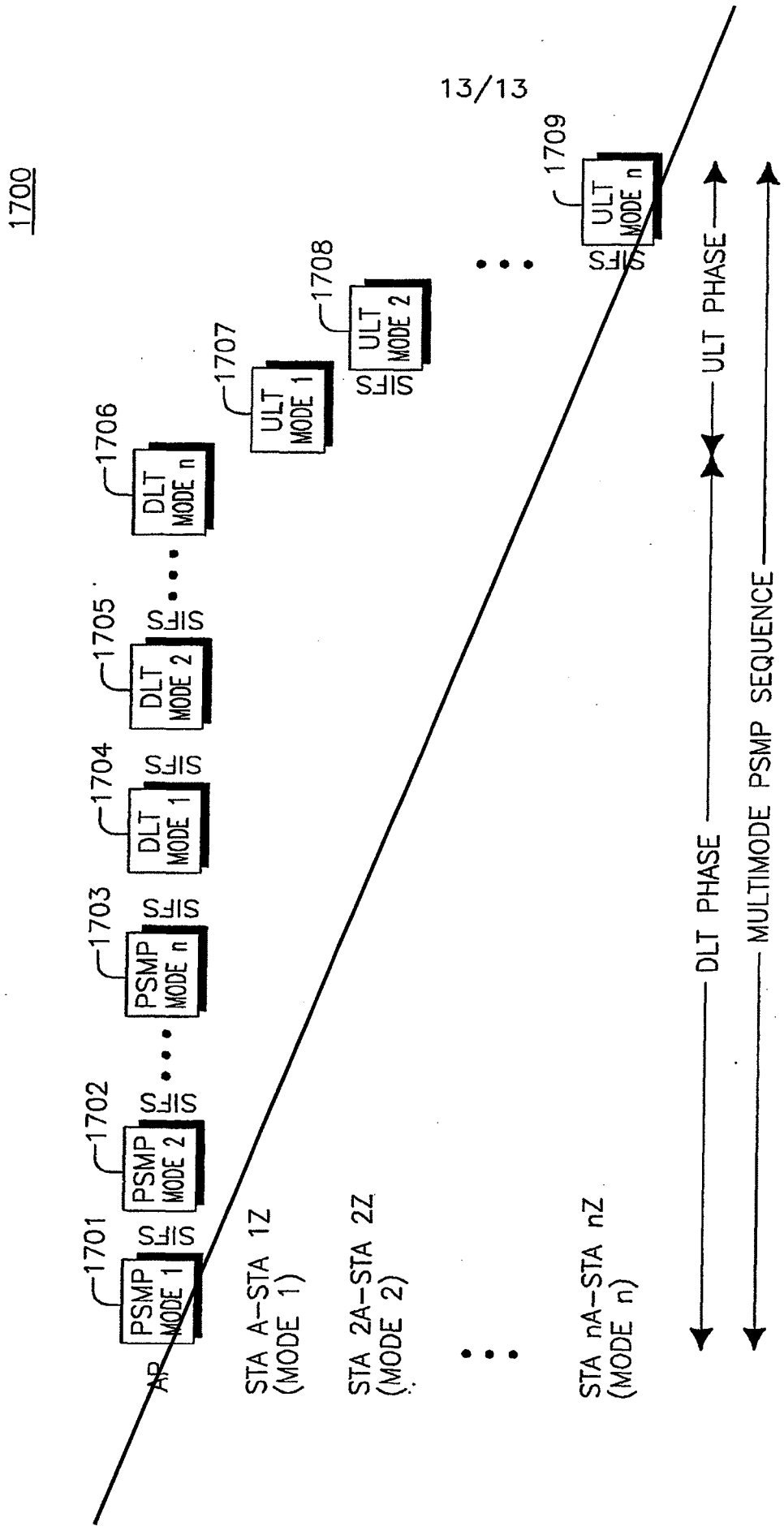
1700
1701
PSMP MODE 1
SIFS
1702
PSMP MODE 2
SIFS
1703
PSMP MODE n
SIFS
1704
DLT MODE 1
SIFS
1705
DLT MODE 2
SIFS
1706
DLT MODE n
1707
ULT MODE 1
SIFS
1708
ULT MODE 2
SIFS
1709
ULT MODE n
SIFS
AP
STA A–STA 1Z (MODE 1)
STA 2A–STA 2Z (MODE 2)
STA nA–STA nZ (MODE n)
DLT PHASE
ULT PHASE
MULTIMODE PSMP SEQUENCE

FIG.17

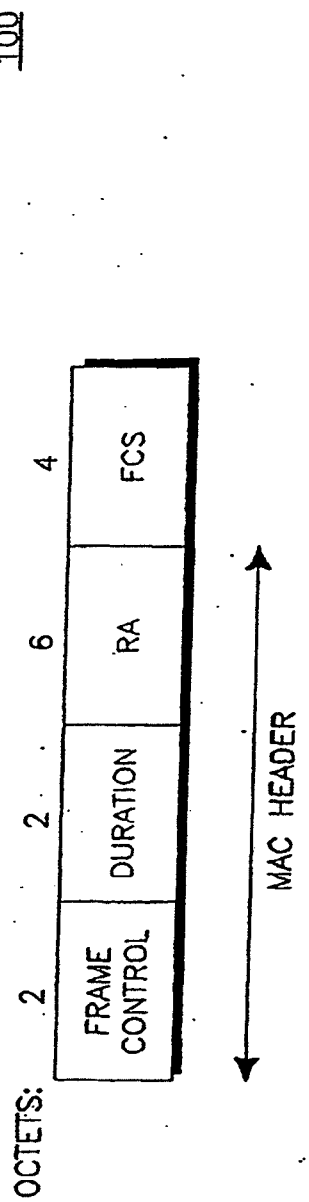
100
OCTETS:
2
2
6
6
4
FRAME CONTROL
DURATION
RA
FCS
MAC HEADER

FIG.1

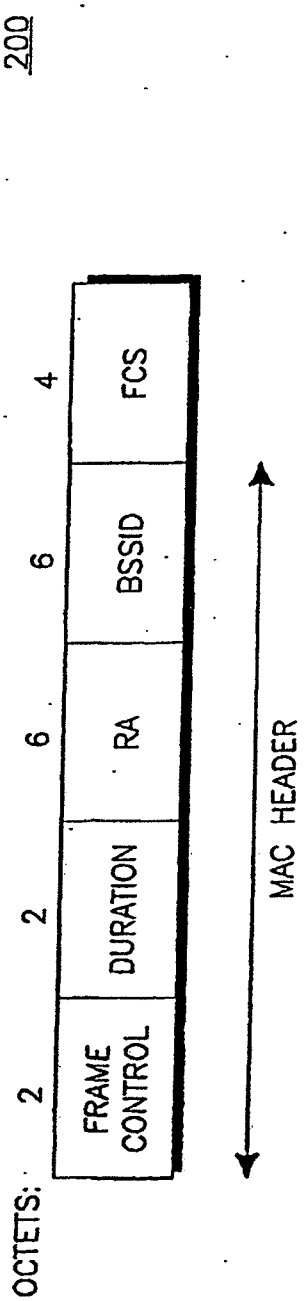
200
OCTETS:
2
2
6
6
6
4
FRAME CONTROL
DURATION
RA
BSSID
FCS
MAC HEADER

FIG.2

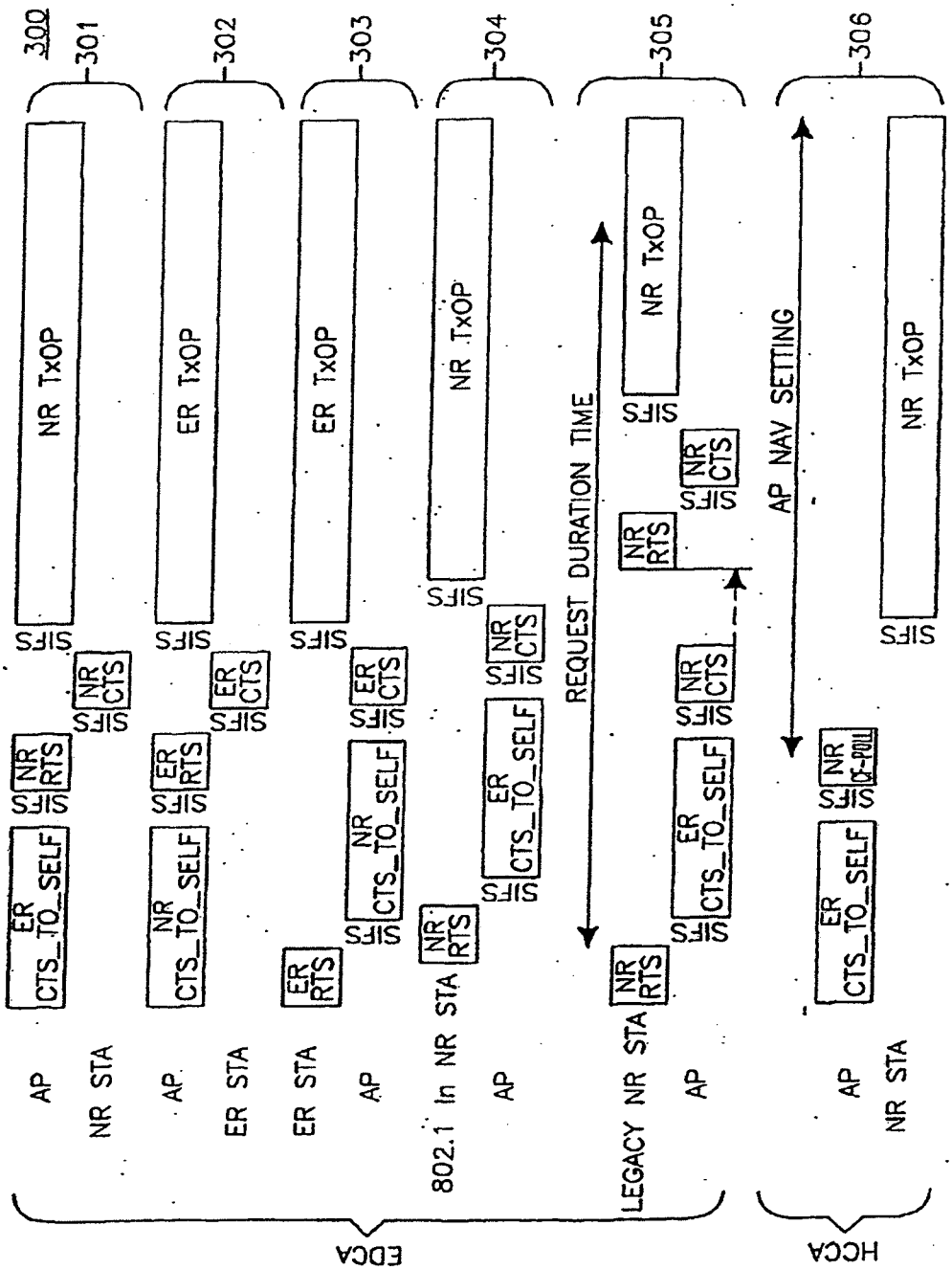
300
301
302
303
304
305
306
AP
NR STA
ER STA
802.1 In NR STA
LEGACY NR STA
NR TxOP
ER TxOP
ER CTS_TO_SELF
NR CTS_TO_SELF
NR RTS
ER RTS
NR CTS
ER CTS
SIFS
REQUEST DURATION TIME
AP NAV SETTING
CF-POLL
EDCA
HCCA

FIG.3

OCTETS	1	1	1	1				
BITS:				B0–B1	B2	B3	B4	B5–B7
	ELEMENT ID	LENGTH (22)	CONTROL CHANNEL	EXTENSION CHANNEL OFFSET	RECOMMENDED TRANSMISSION WIDTH SET	RIFS MODE	CONTROLLED ACCESS ONLY	SERVICE INTERVAL GRANULARITY

2		2					16
B0–B1	B2–B15	B0–B6	B7	B8	B9	B10–B15	
OPERATING MODE	RESERVED	BASIC STBC MCS	DUAL STBC PROTECTION	SECONDARY BEACON	L-SIG PROTECTION ALLOWED	RESERVED	BASIC MCS SET

FIG.4

500

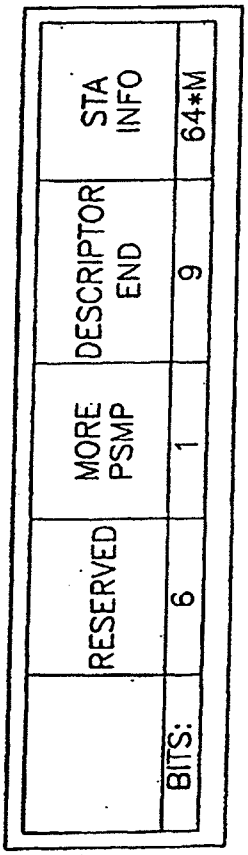

FIG.5

600

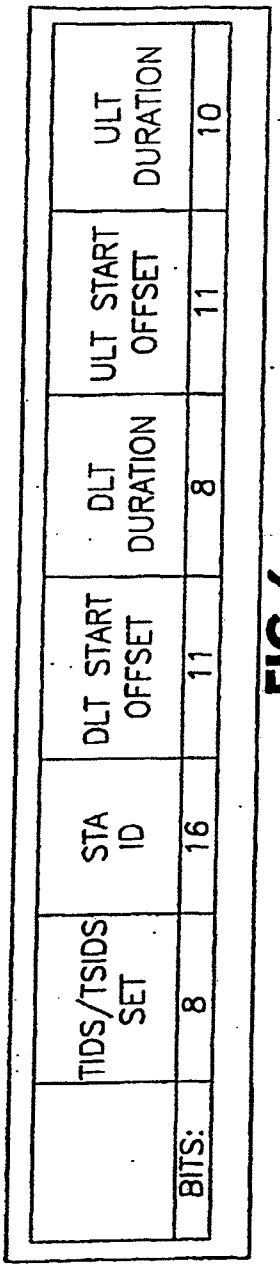

FIG.6

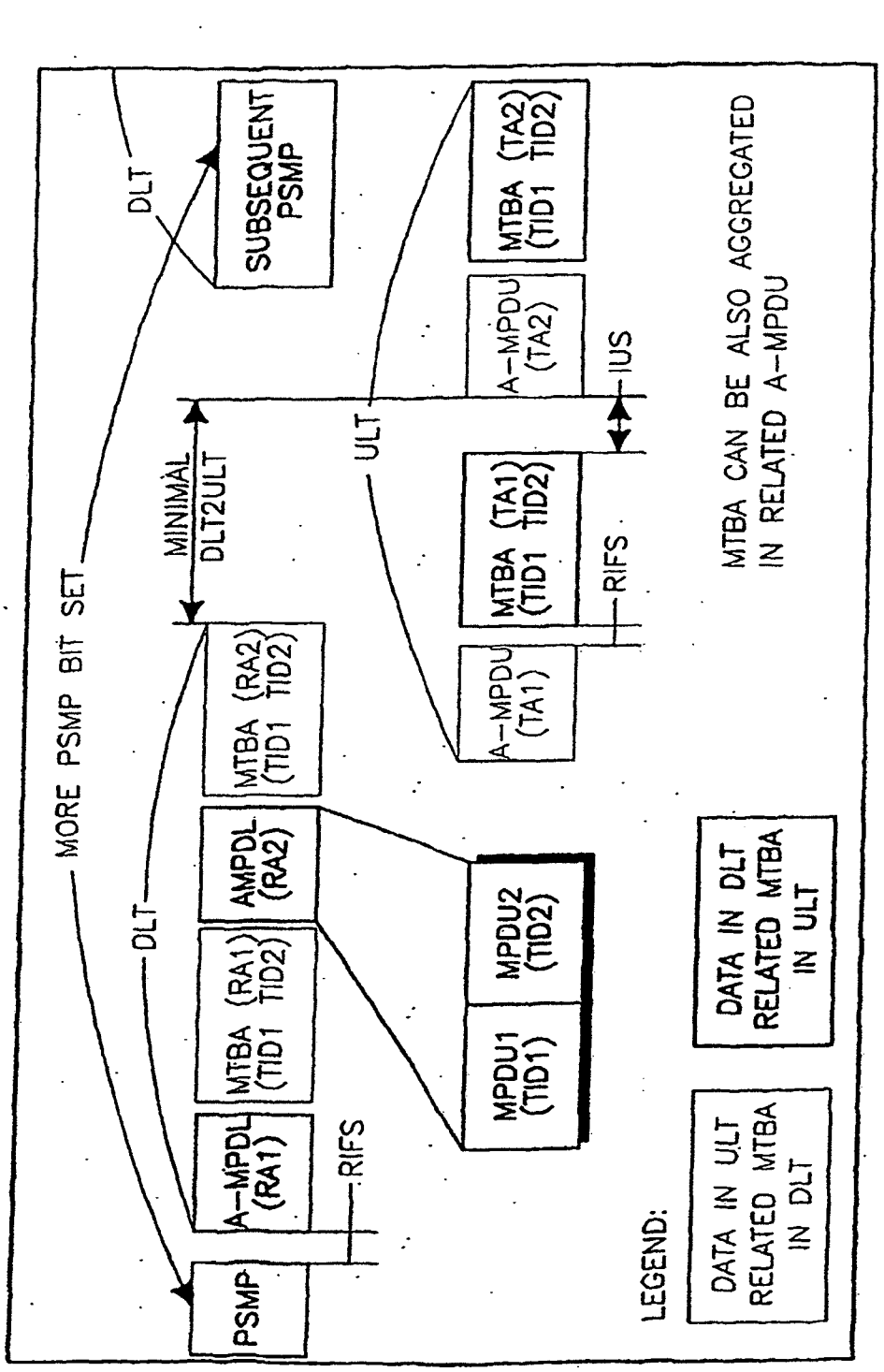
700
MORE PSMP BIT SET
DLT
SUBSEQUENT PSMP
MINIMAL DLT2ULT
ULT
MTBA (TA2) (TID1 TID2)
A-MPDU (TA2)
IUS
MTBA (TA1) (TID1 TID2)
RIFS
A-MPDU (TA1)
MTBA CAN BE ALSO AGGREGATED IN RELATED A-MPDU
DLT
MTBA (RA2) (TID1 TID2)
AMPDL (RA2)
MTBA (RA1) (TID1 TID2)
MPDU2 (TID2)
MPDU1 (TID1)
A-MPDL (RA1)
RIFS
PSMP
LEGEND:
DATA IN ULT RELATED MTBA IN DLT
DATA IN DLT RELATED MTBA IN ULT

FIG.7

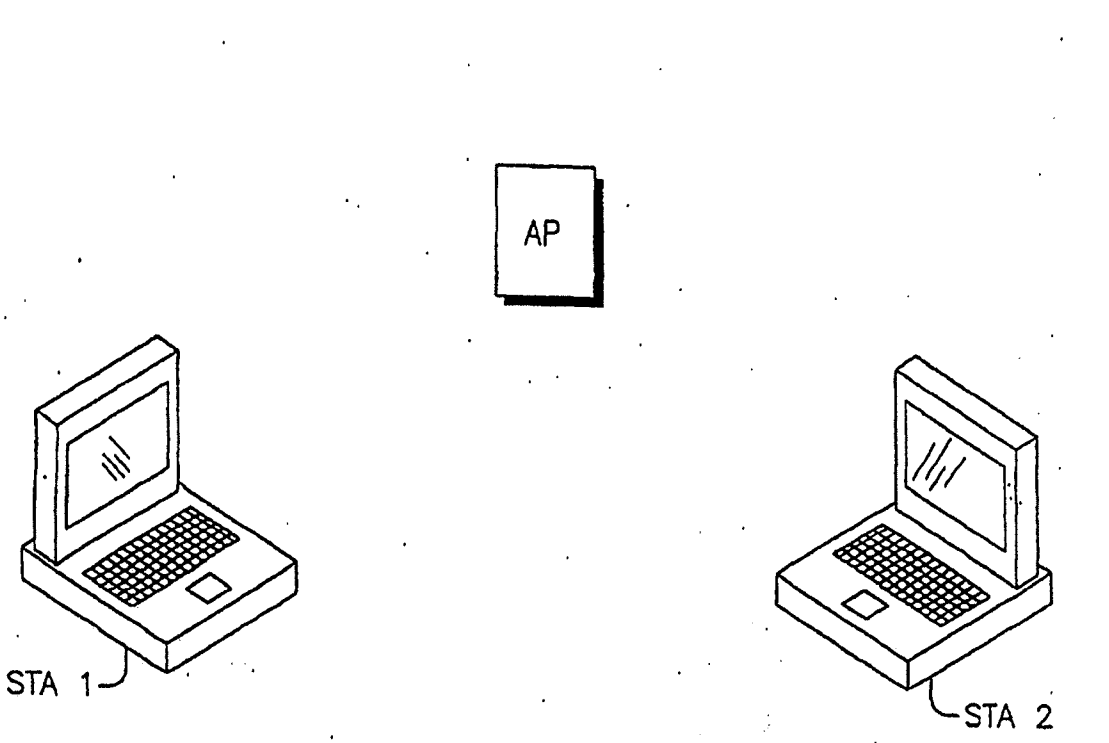

FIG.8

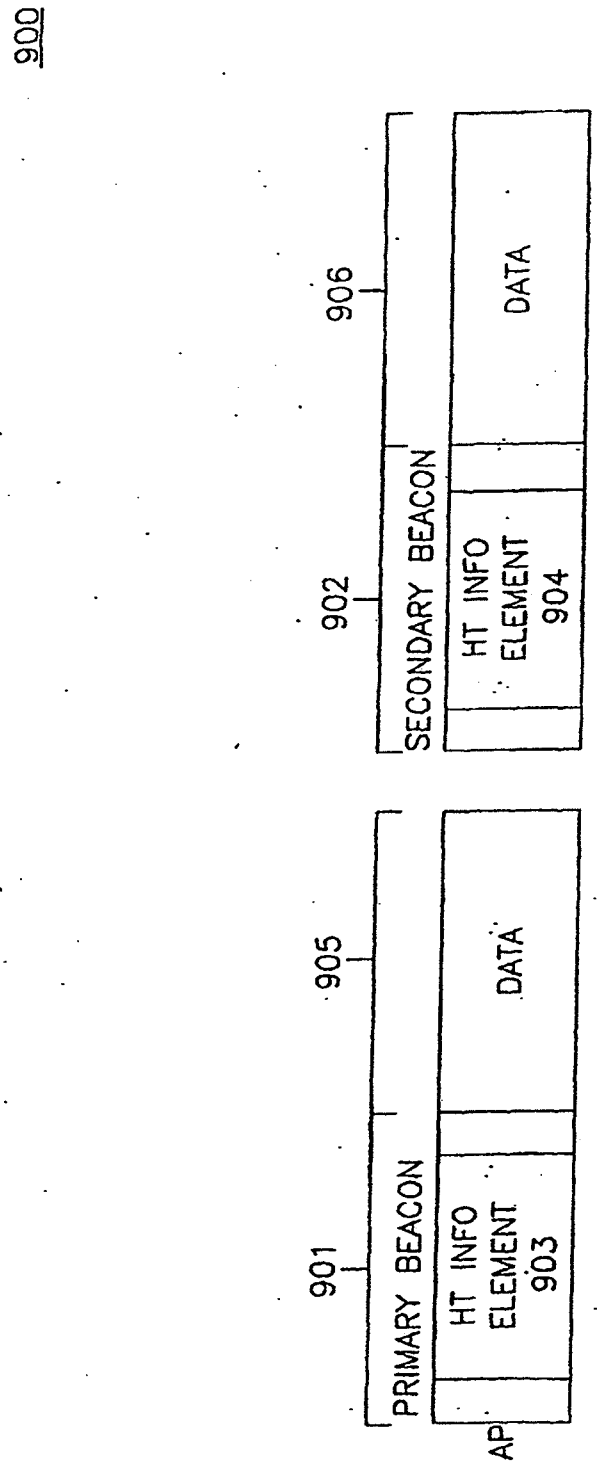
900
AP
PRIMARY BEACON
HT INFO ELEMENT 903
DATA
901
905
SECONDARY BEACON
HT INFO ELEMENT 904
DATA
902
906

FIG.9

1000

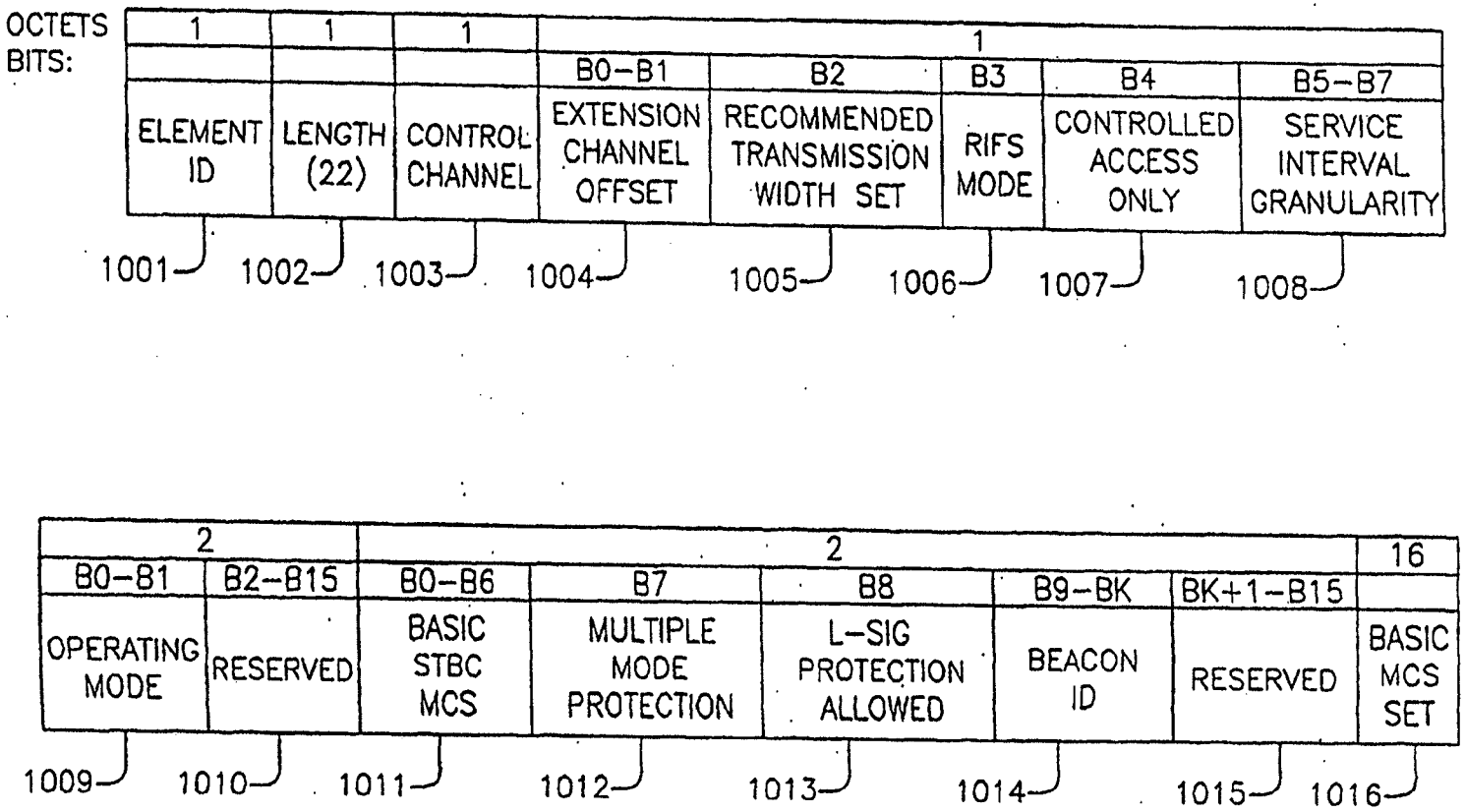
OCTETS
BITS:
1
1
1
1
B0–B1
B2
B3
B4
B5–B7
ELEMENT ID
LENGTH (22)
CONTROL CHANNEL
EXTENSION CHANNEL OFFSET
RECOMMENDED TRANSMISSION WIDTH SET
RIFS MODE
CONTROLLED ACCESS ONLY
SERVICE INTERVAL GRANULARITY
1001
1002
1003
1004
1005
1006
1007
1008
2
2
16
B0–B1
B2–B15
B0–B6
B7
B8
B9–BK
BK+1–B15
OPERATING MODE
RESERVED
BASIC STBC MCS
MULTIPLE MODE PROTECTION
L–SIG PROTECTION ALLOWED
BEACON ID
RESERVED
BASIC MCS SET
1009
1010
1011
1012
1013
1014
1015
1016

FIG.10

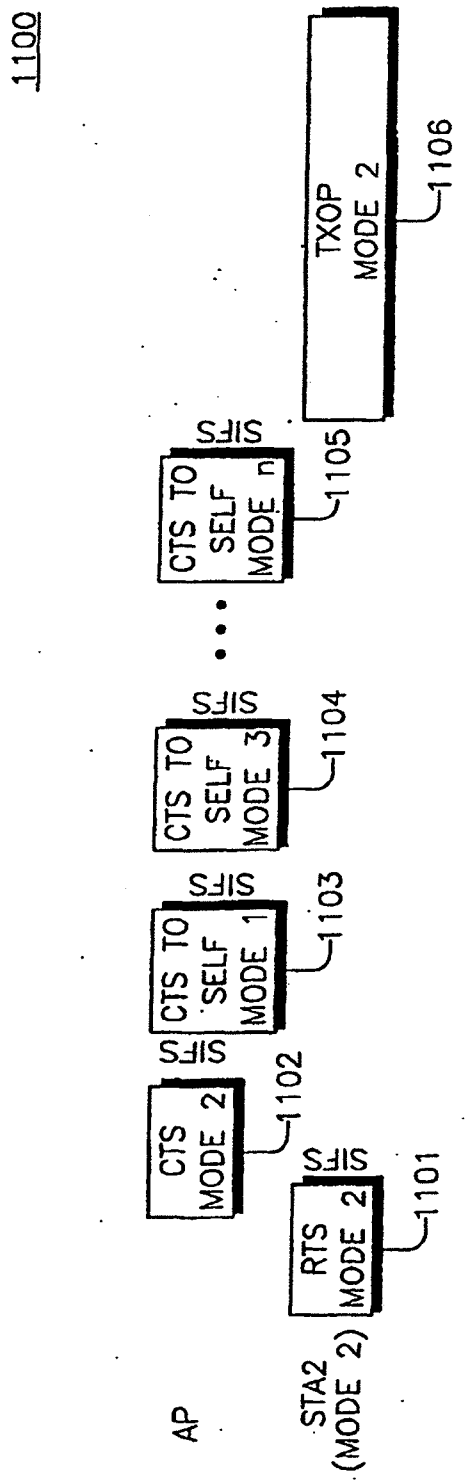
1100
AP
STA2
(MODE 2)
RTS
MODE 2
1101
SIFS
CTS
MODE 2
1102
SIFS
CTS TO
SELF
MODE 1
1103
SIFS
CTS TO
SELF
MODE 3
1104
SIFS
CTS TO
SELF
MODE n
1105
SIFS
TXOP
MODE 2
1106

FIG.11

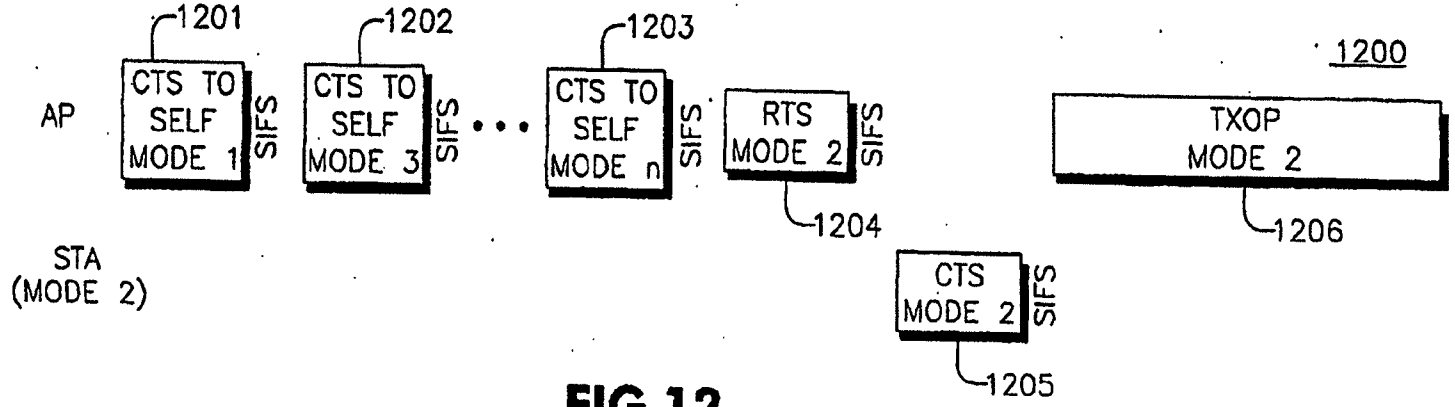
1200
1201
1202
1203
AP
CTS TO SELF MODE 1
SIFS
CTS TO SELF MODE 3
SIFS
CTS TO SELF MODE n
SIFS
RTS MODE 2
SIFS
TXOP MODE 2
1204
1206
STA (MODE 2)
CTS MODE 2
SIFS
1205

FIG.12

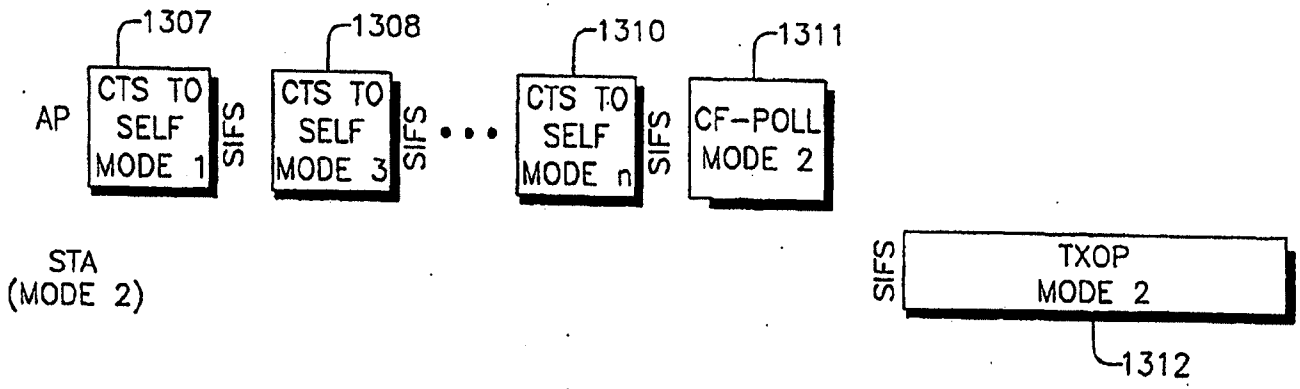
1300
1307
1308
1310
1311
AP
CTS TO SELF MODE 1
SIFS
CTS TO SELF MODE 3
SIFS
CTS TO SELF MODE n
SIFS
CF-POLL MODE 2
STA (MODE 2)
SIFS
TXOP MODE 2
1312

FIG.13

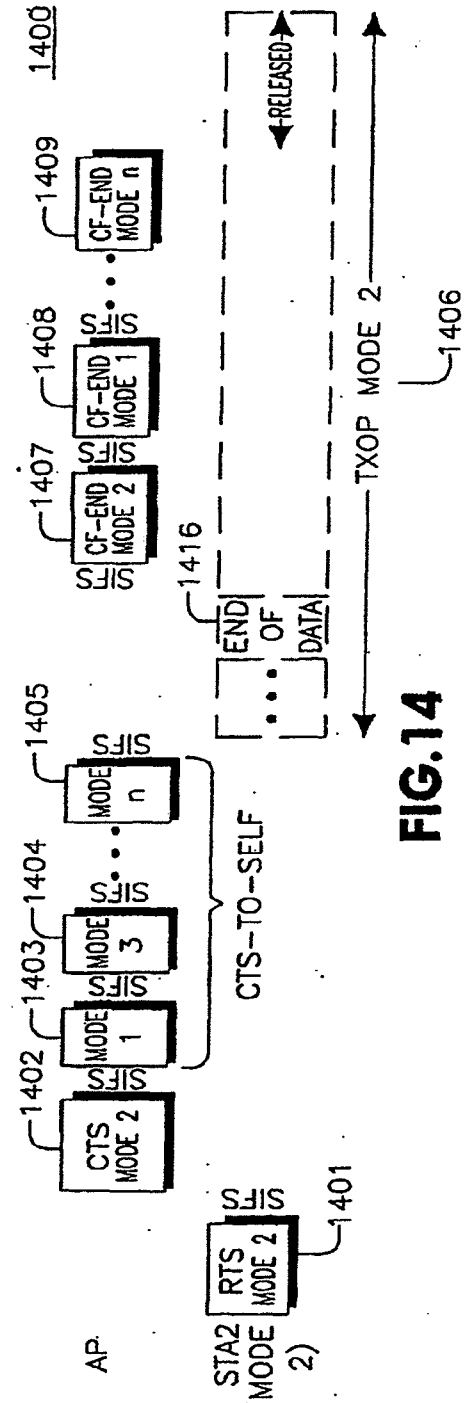
1400
AP
STA2 (MODE 2)
RTS MODE 2
CTS MODE 2
MODE 1
MODE 3
MODE n
CF-END MODE 2
CF-END MODE 1
CF-END MODE n
SIFS
CTS-TO-SELF
END OF DATA
RELEASED
TXOP MODE 2
1401
1402
1403
1404
1405
1406
1407
1408
1409
1416

FIG.14

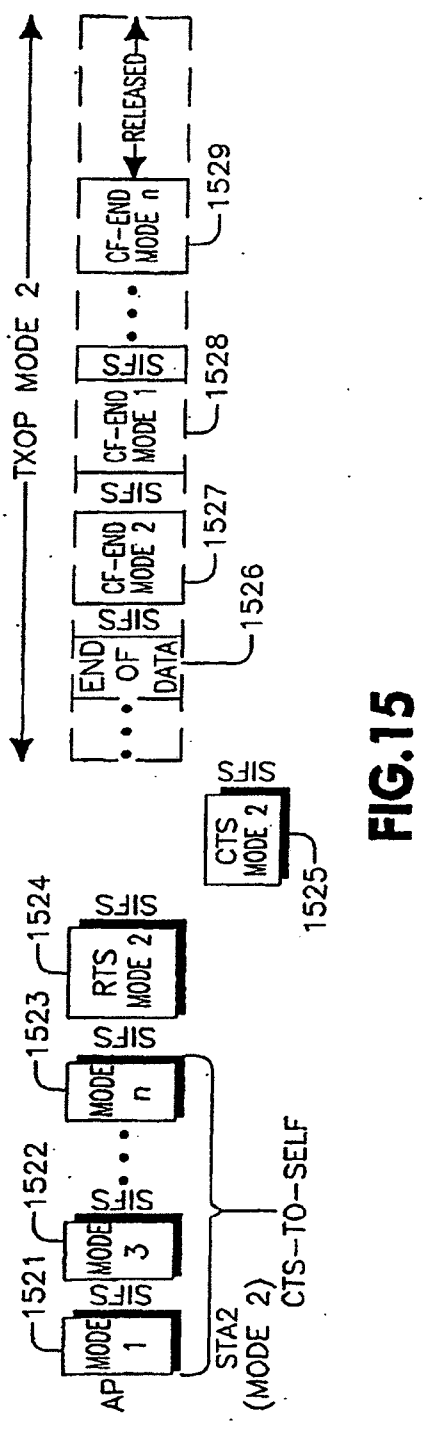
1500
1506
TXOP MODE 2
AP
STA2 (MODE 2)
CTS-TO-SELF
CTS MODE 2
RTS MODE 2
MODE 1
MODE 3
MODE n
CF-END MODE 2
CF-END MODE 1
CF-END MODE n
SIFS
END OF DATA
RELEASED
1521
1522
1523
1524
1525
1526
1527
1528
1529

FIG.15

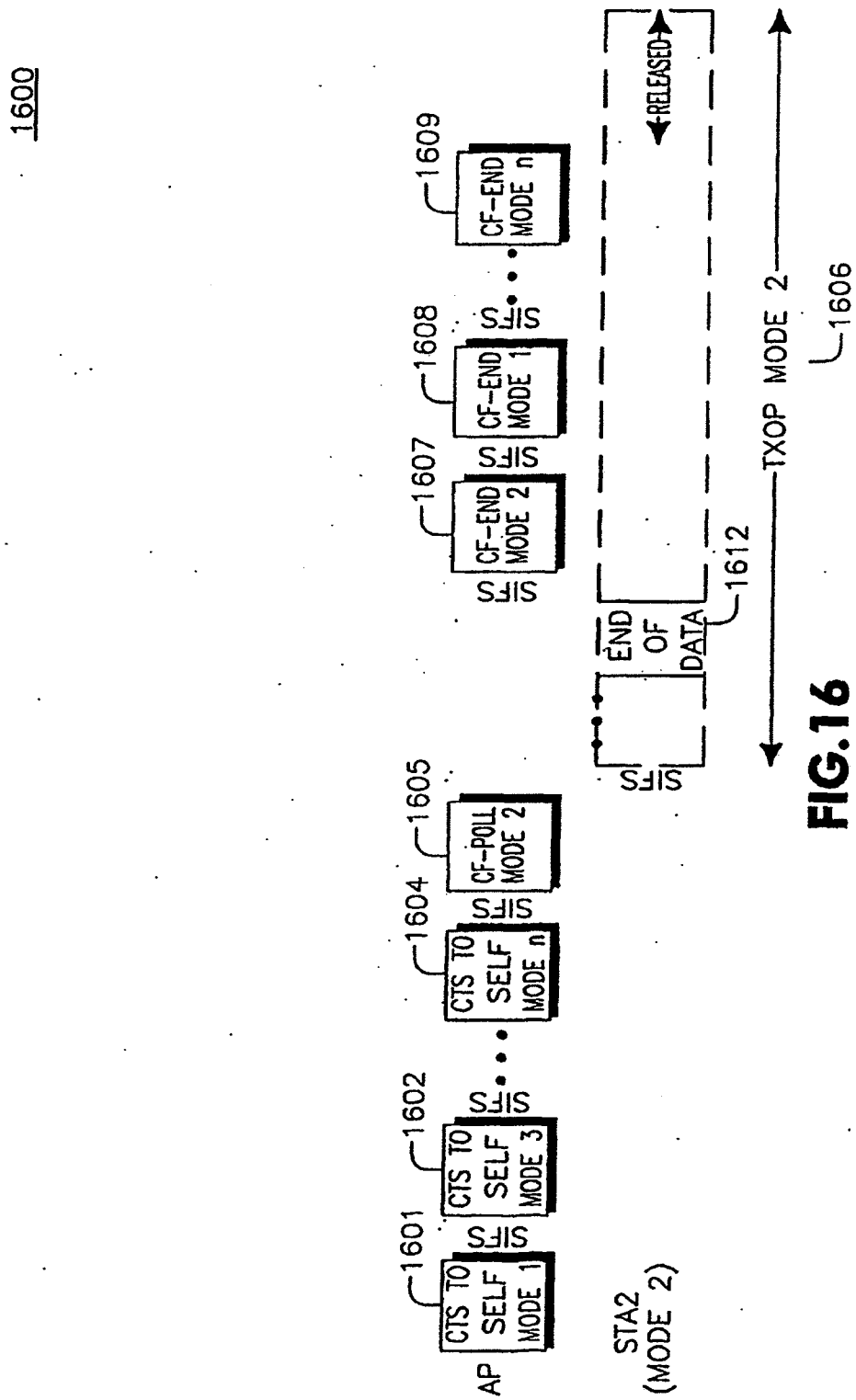
1600
AP
CTS TO SELF MODE 1
1601
SIFS
CTS TO SELF MODE 3
1602
SIFS
CTS TO SELF MODE n
1604
SIFS
CF-POLL MODE 2
1605
SIFS
CF-END MODE 2
1607
SIFS
CF-END MODE 1
1608
SIFS
CF-END MODE n
1609
STA2 (MODE 2)
SIFS
END OF DATA
1612
RELEASED
TXOP MODE 2
1606

FIG.16

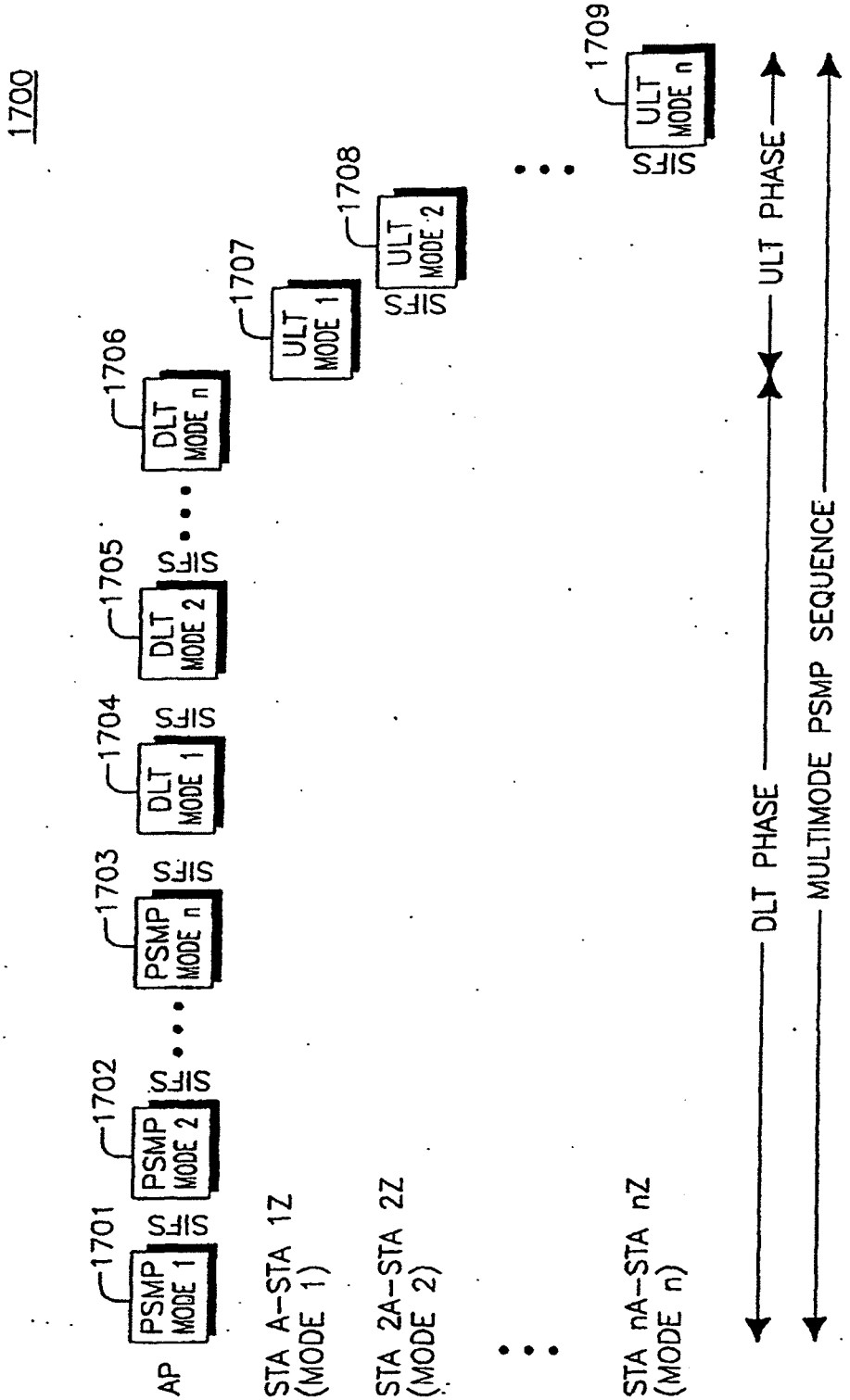
1700
AP
STA A–STA 1Z
(MODE 1)
STA 2A–STA 2Z
(MODE 2)
STA nA–STA nZ
(MODE n)
PSMP MODE 1
PSMP MODE 2
PSMP MODE n
DLT MODE 1
DLT MODE 2
DLT MODE n
ULT MODE 1
ULT MODE 2
ULT MODE n
SIFS
1701
1702
1703
1704
1705
1706
1707
1708
1709
DLT PHASE
ULT PHASE
MULTIMODE PSMP SEQUENCE

FIG.17