21 JUN 2005

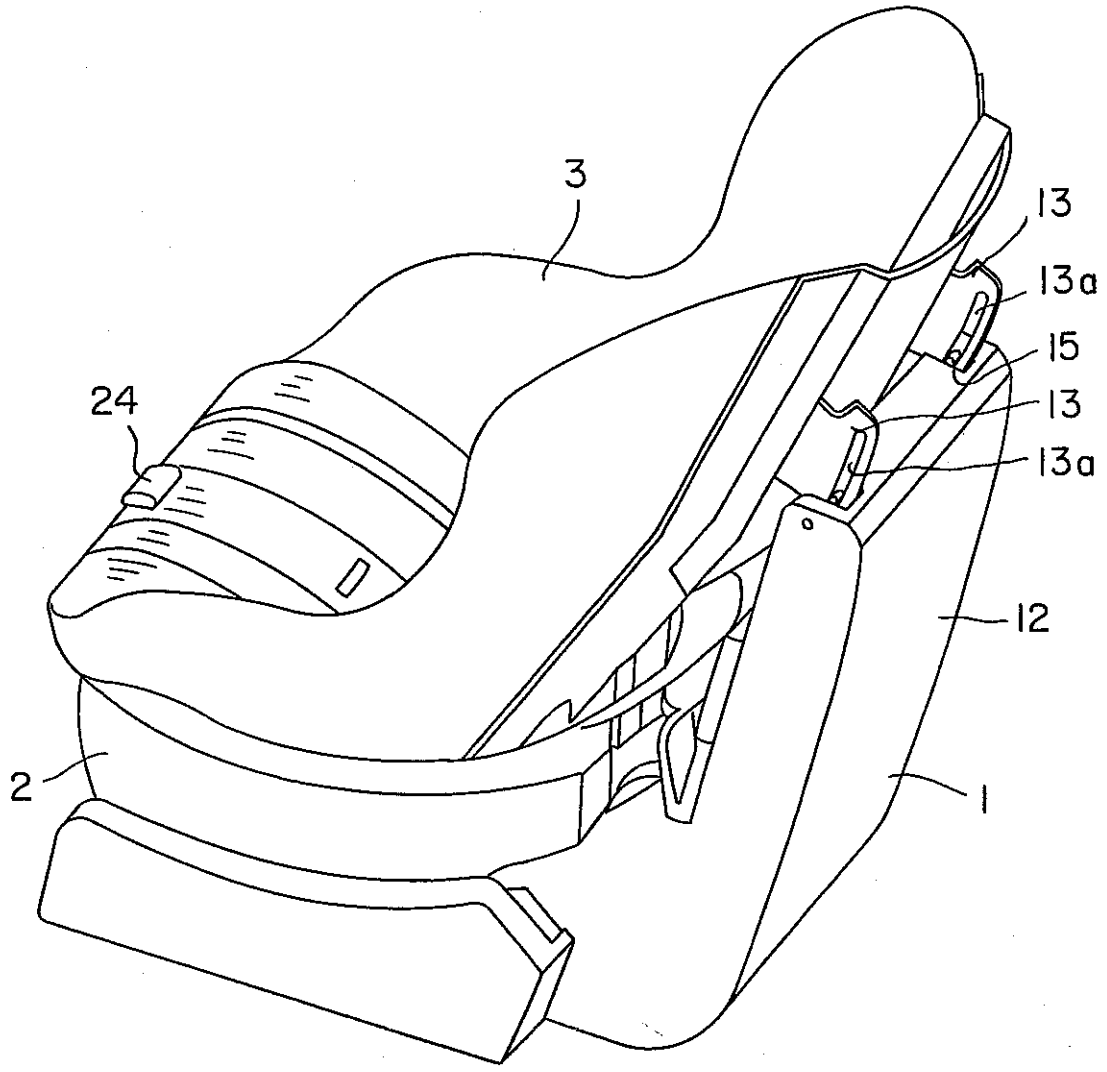

FIG. 1

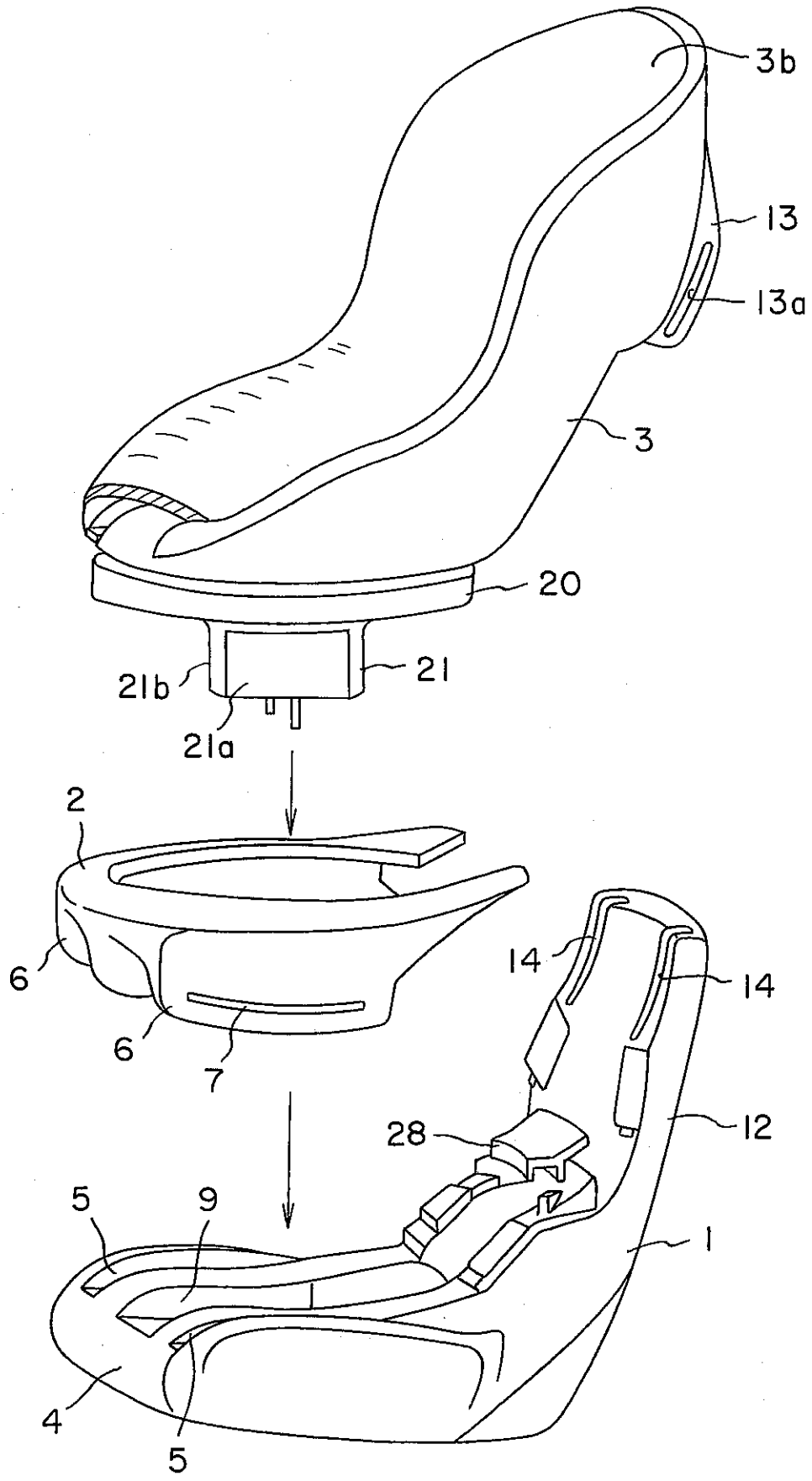

FIG. 2

21 JUN 2005

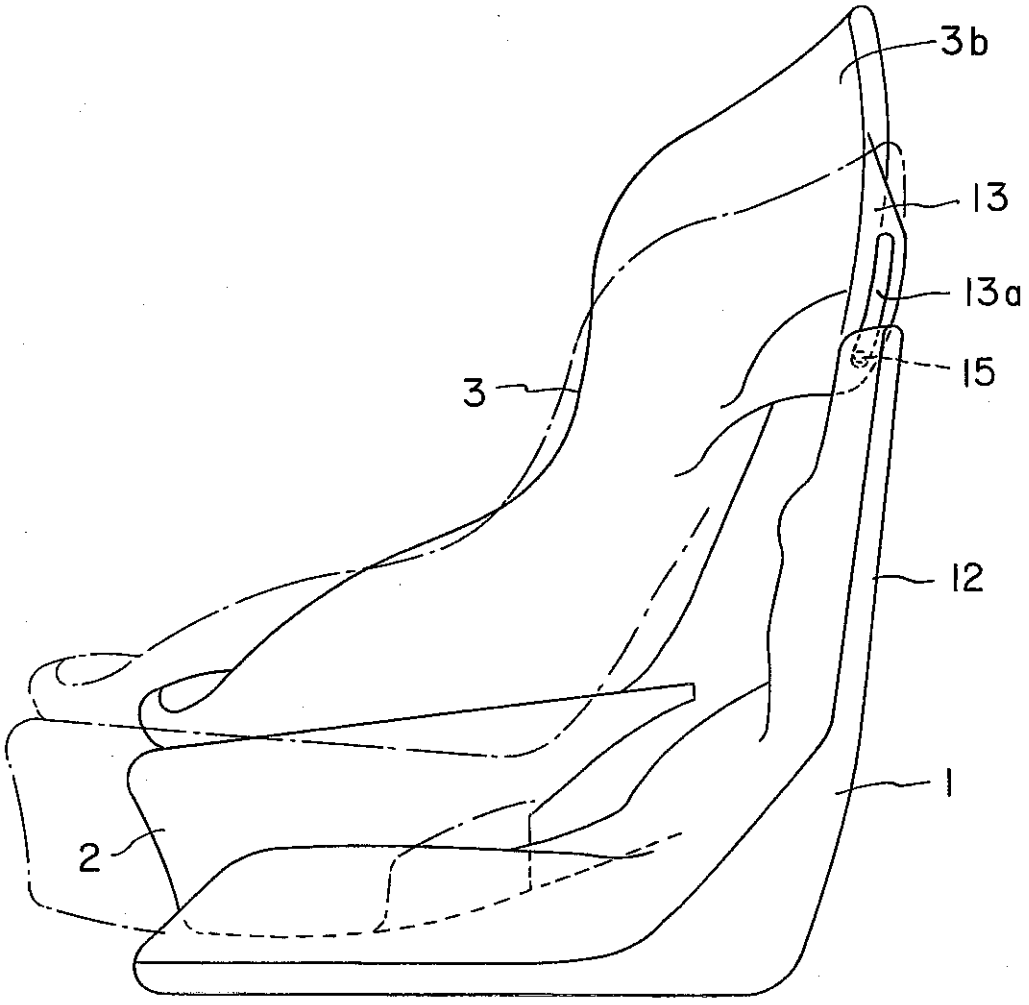

FIG. 3

21 JUN 2005

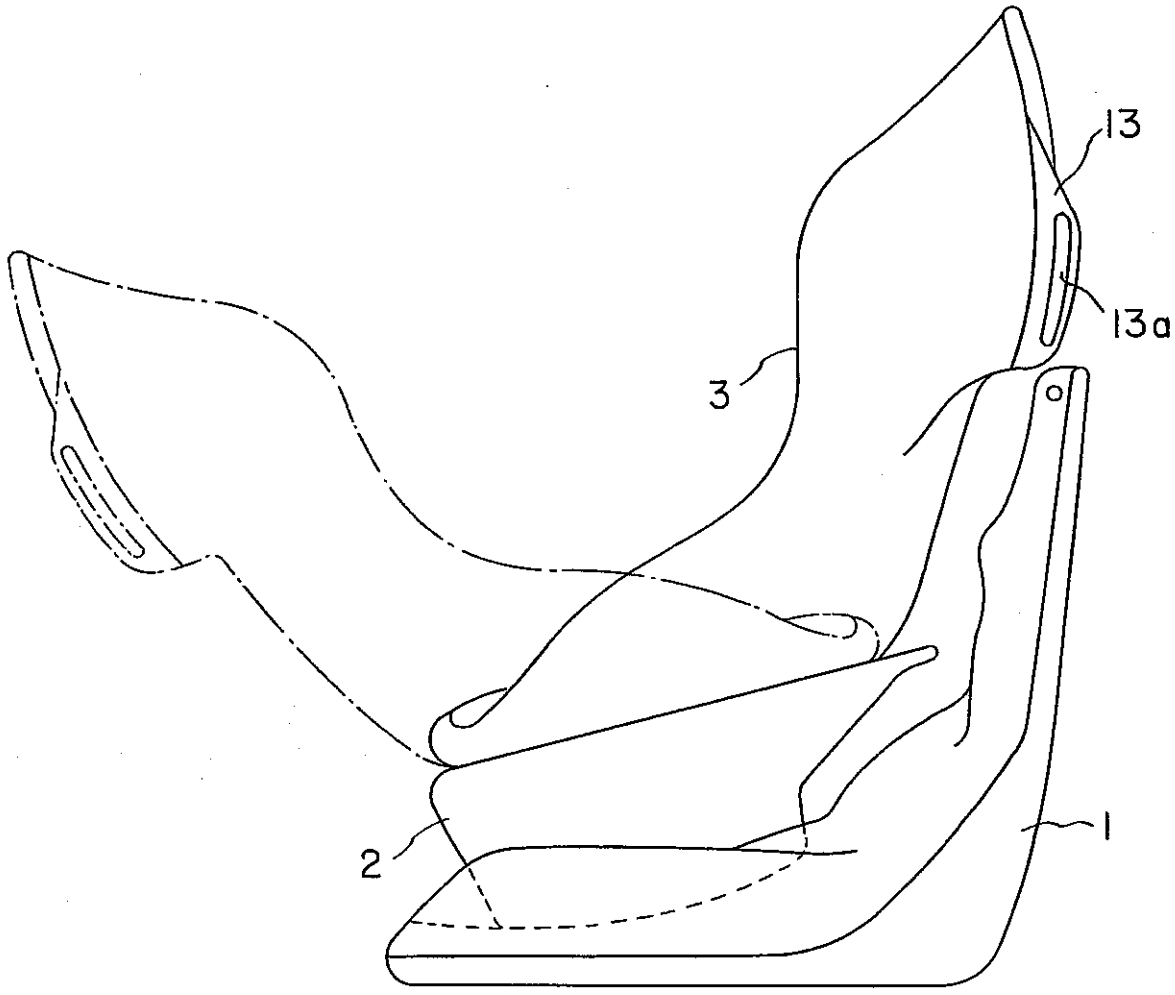

FIG. 4

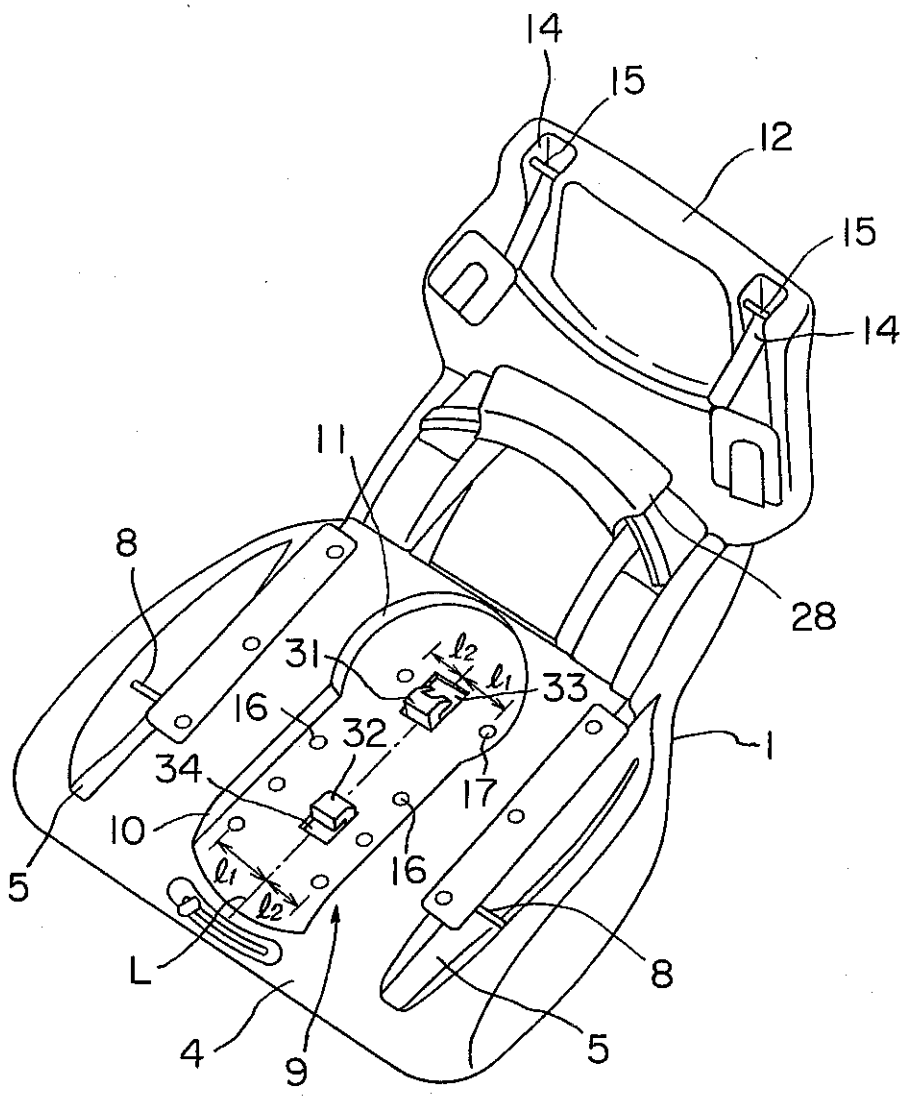

FIG. 5

21 JUN 2005

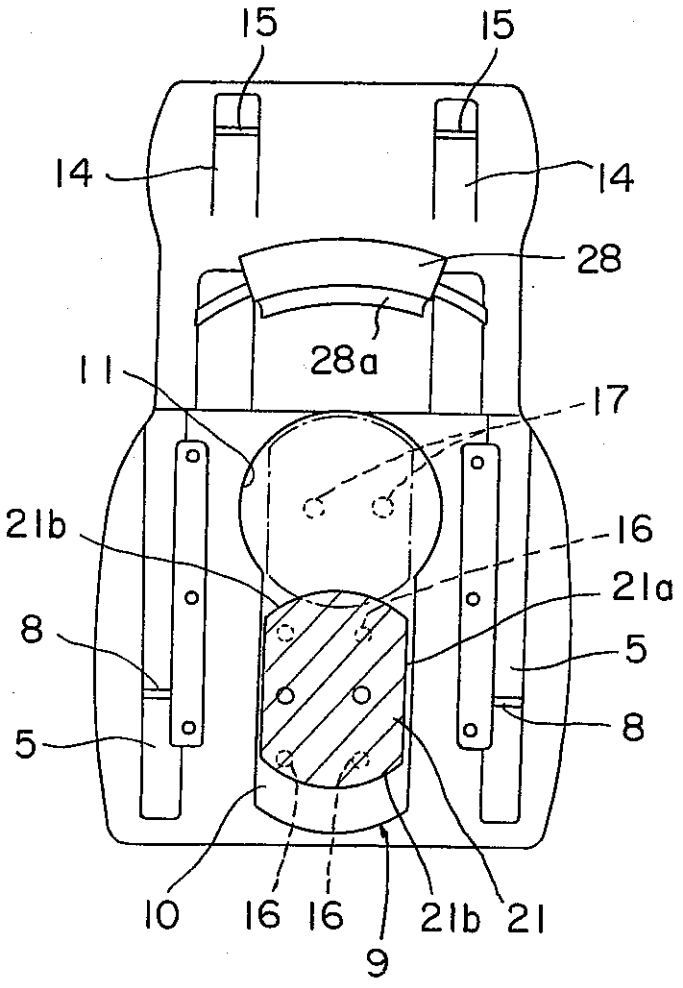

FIG. 6

21 JUN 2005

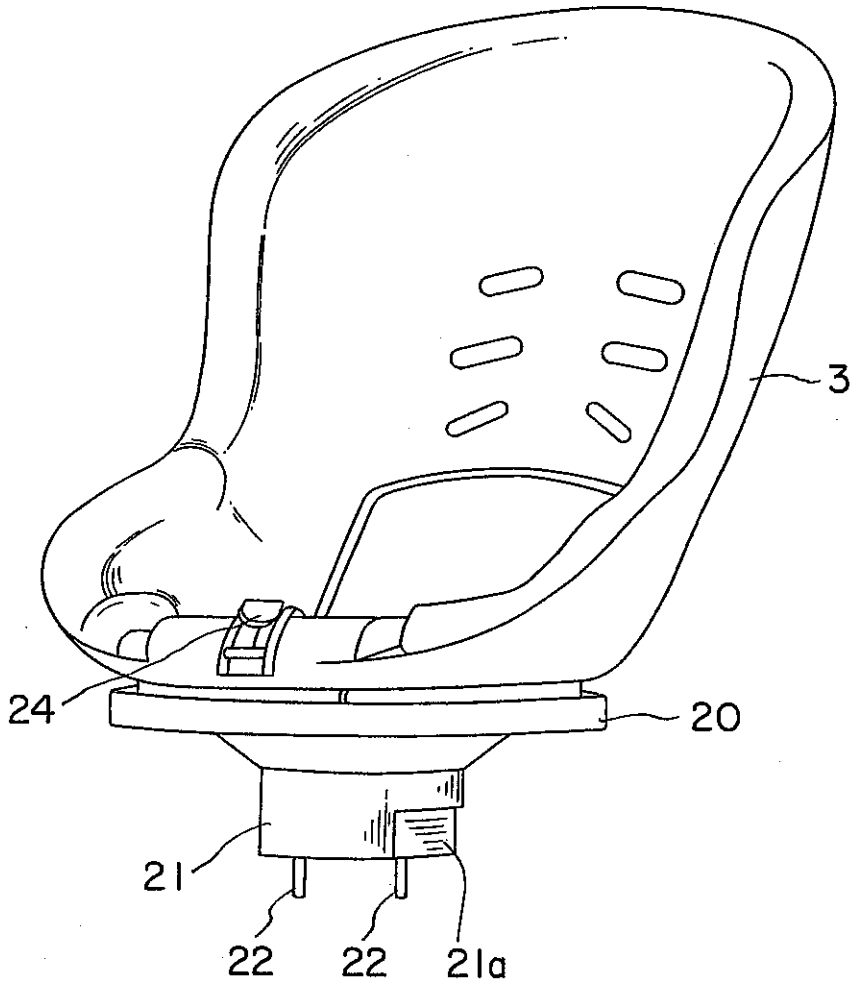

FIG. 7

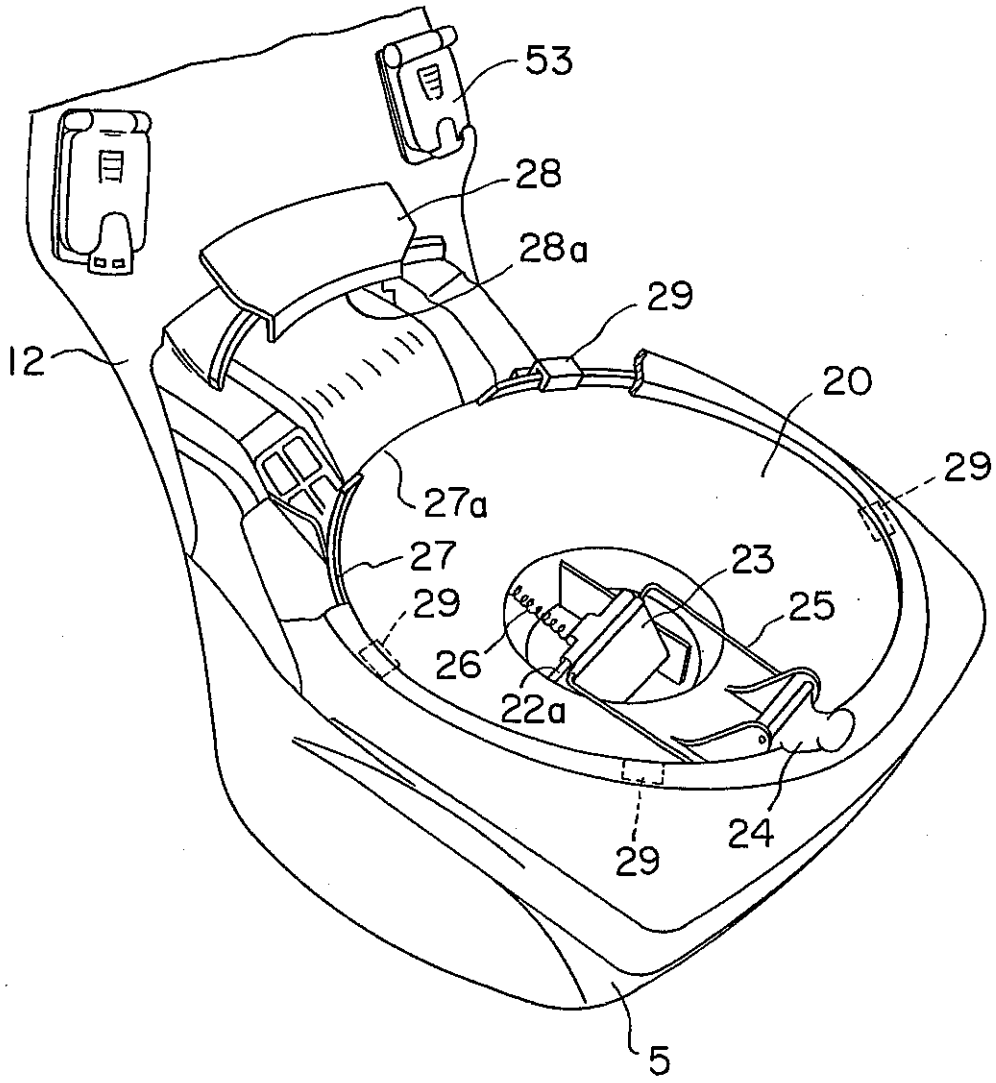

FIG. 8

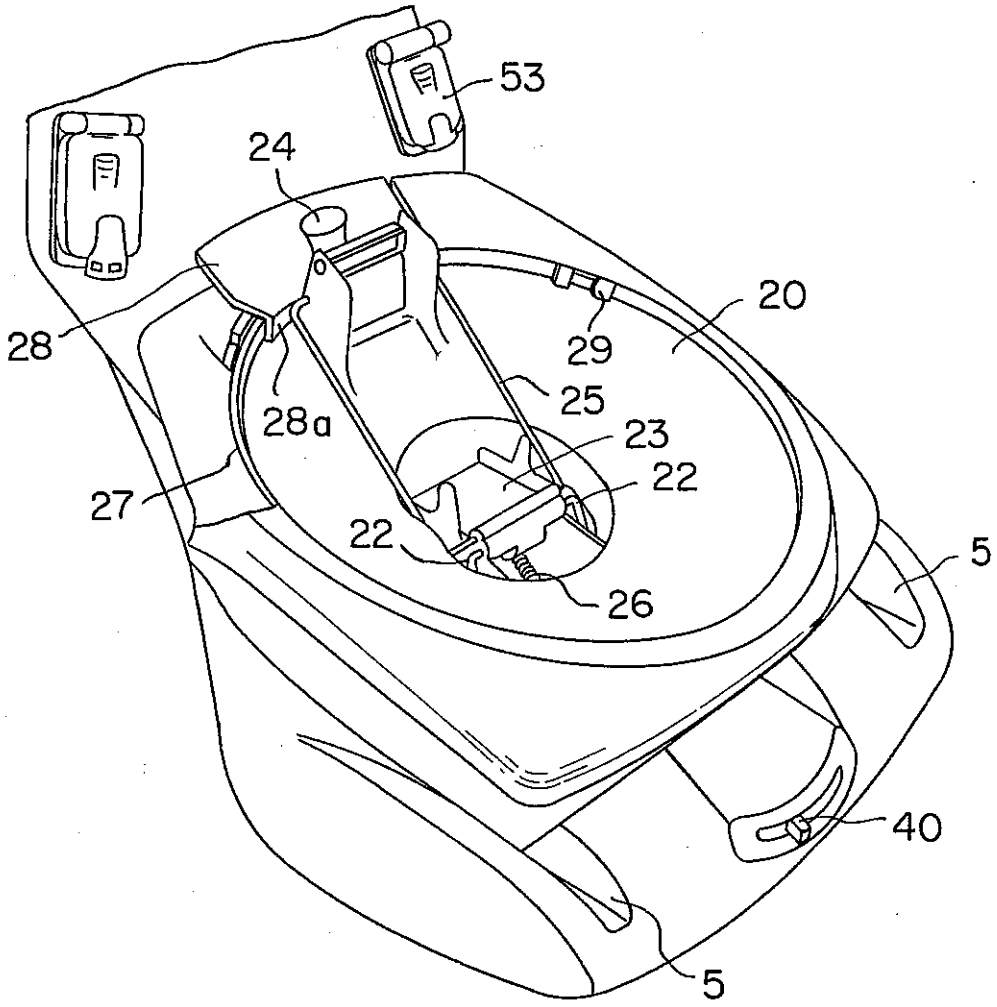

FIG. 9

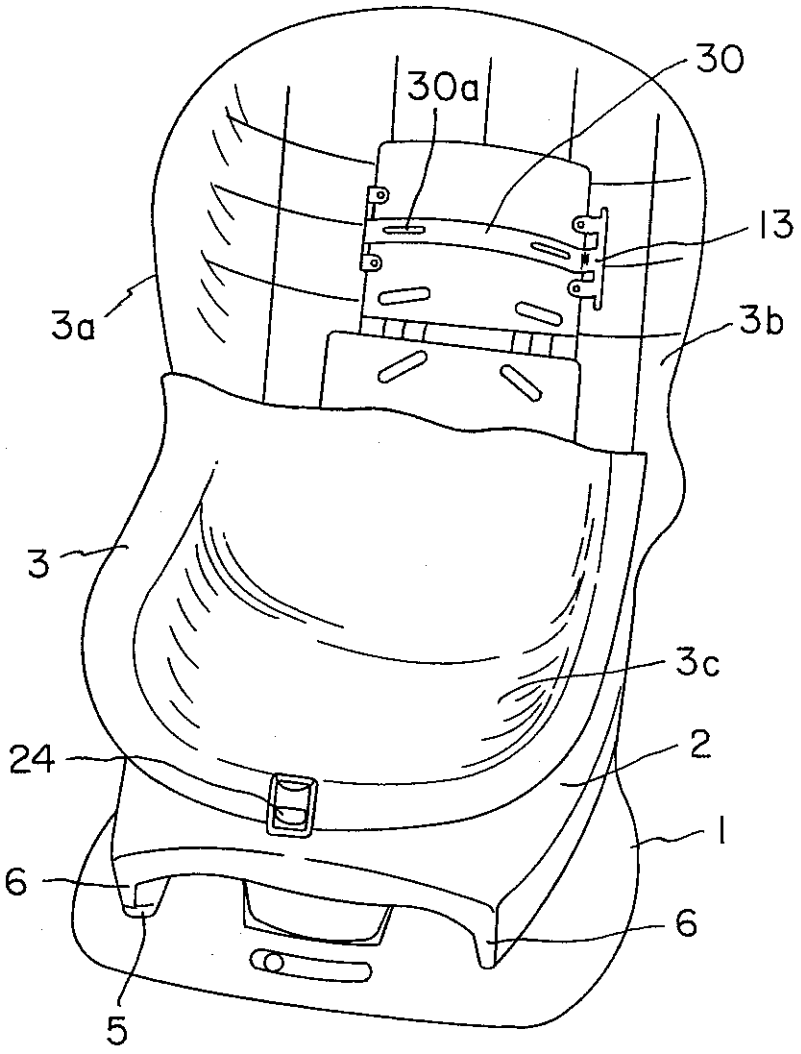

FIG. 10

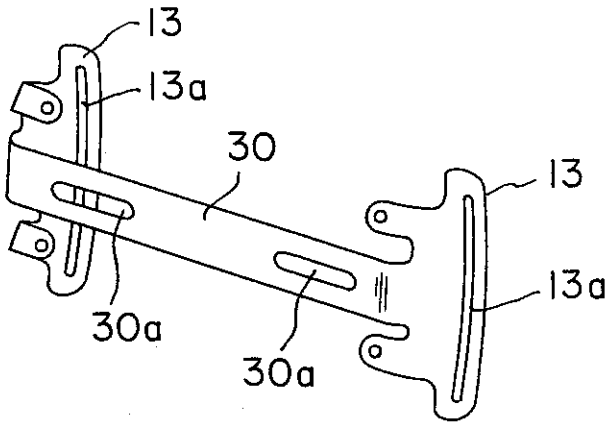

FIG. 11

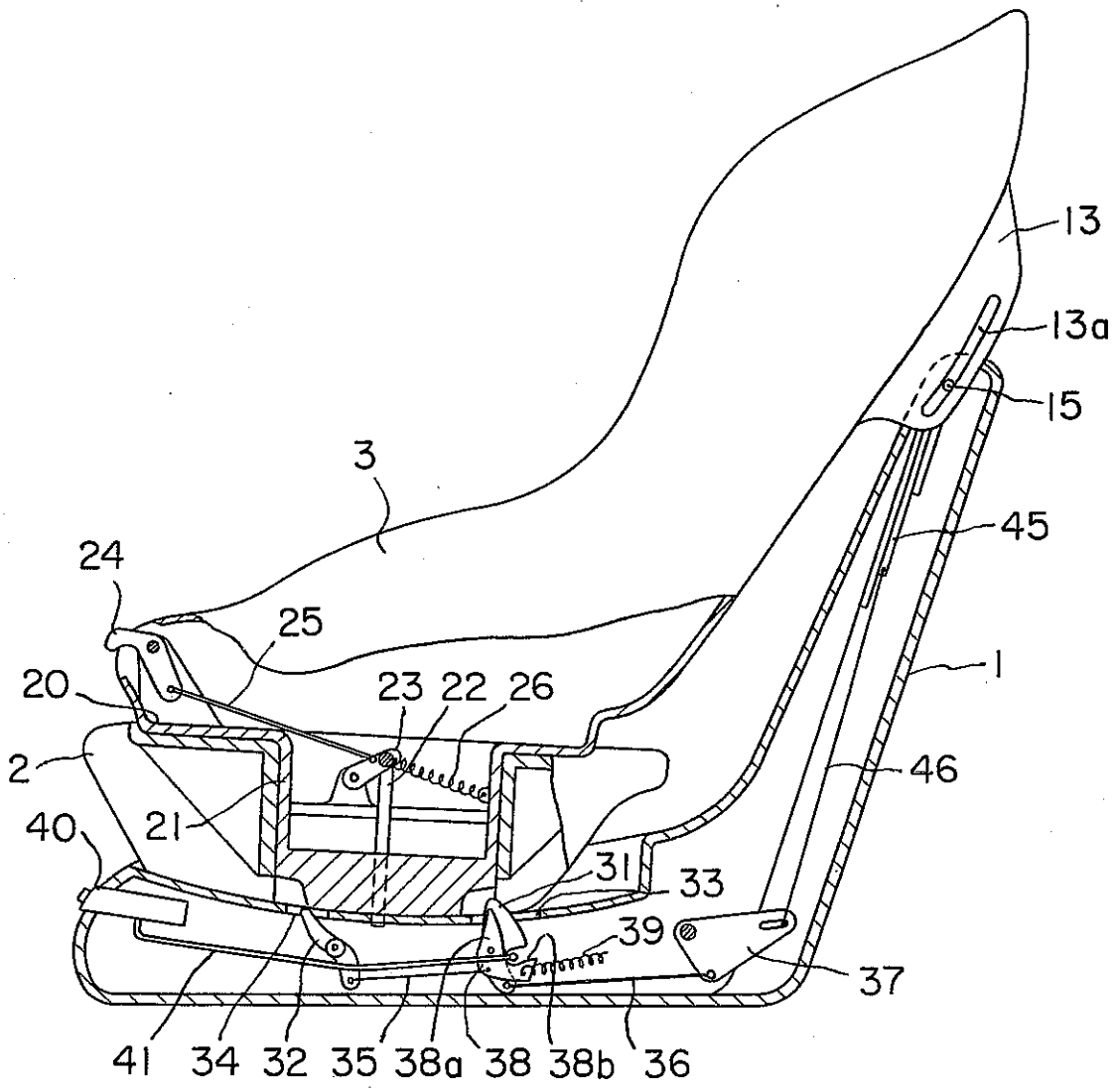
13
13a
15
3
45
24
25
1
20
23
22
26
2
46
21
40
31
33
39
37
41
34
32
35
38a
38
38b
36

FIG. 12

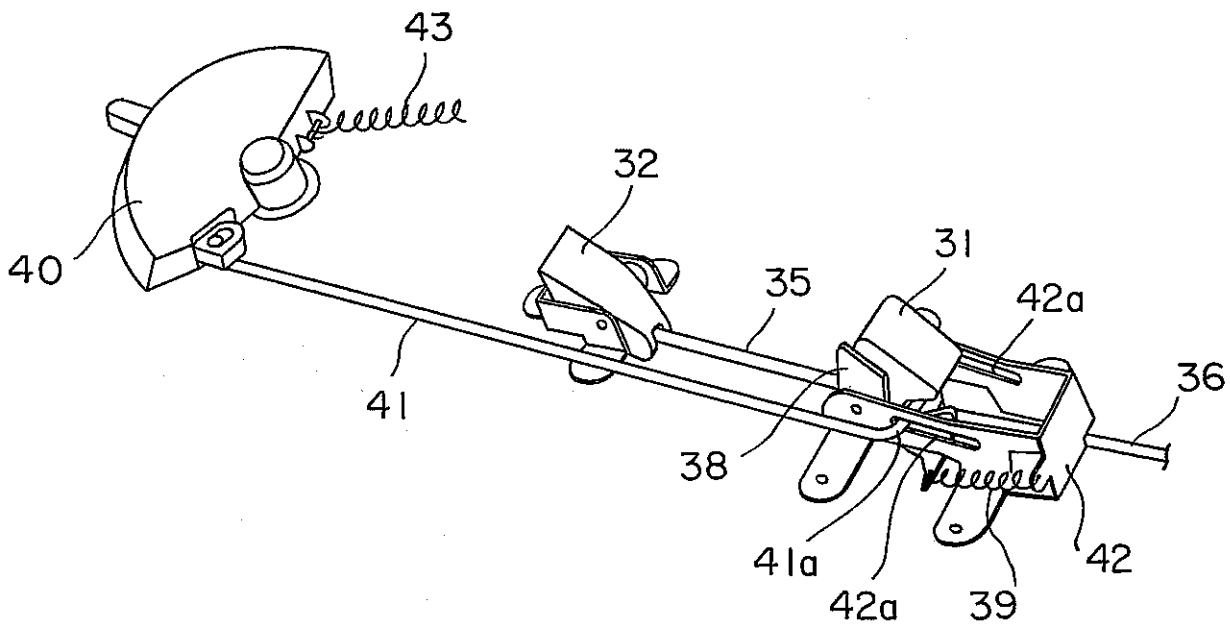

FIG. 13

21 JUN 2005

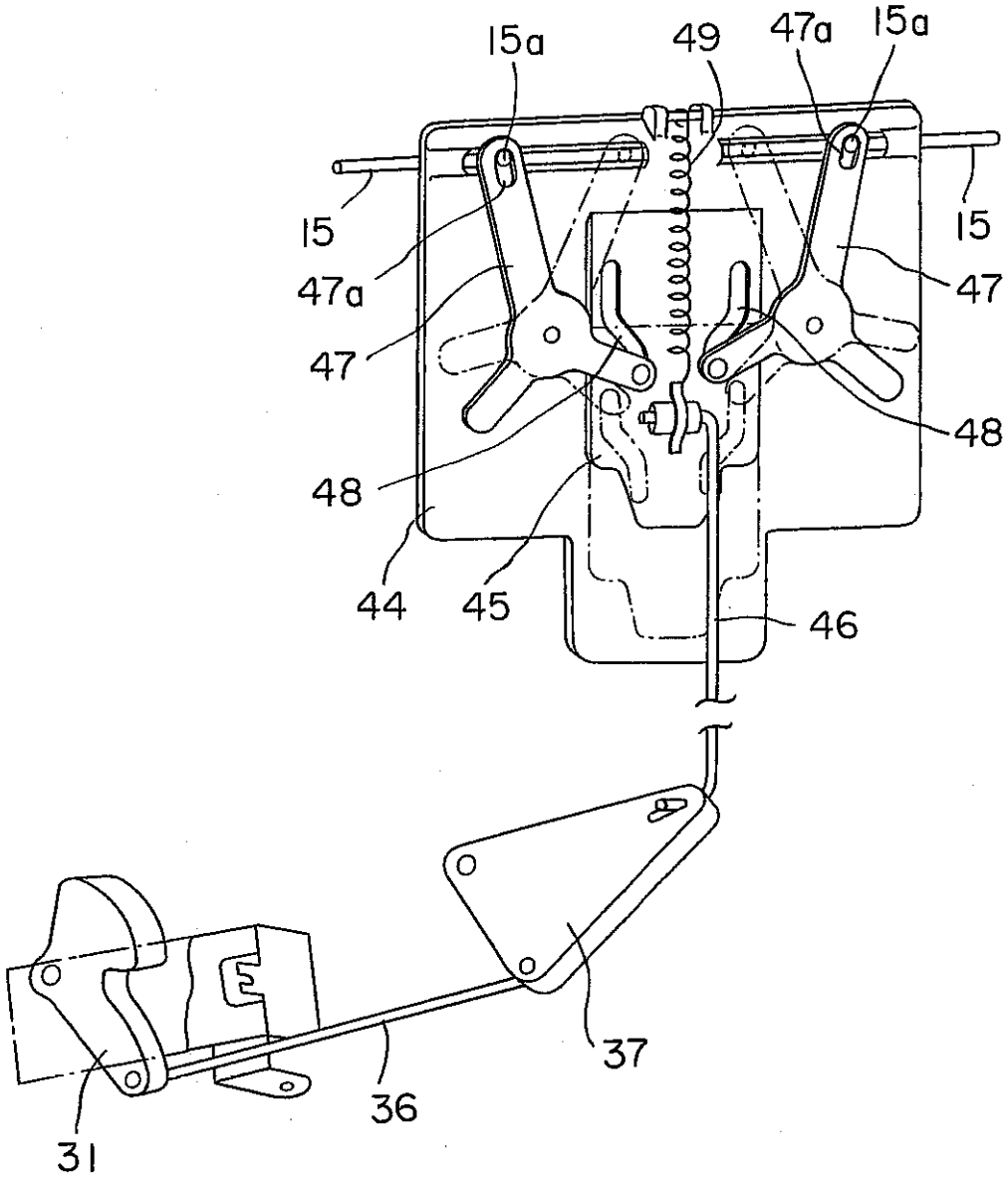

FIG. 14

21 JUN 2005

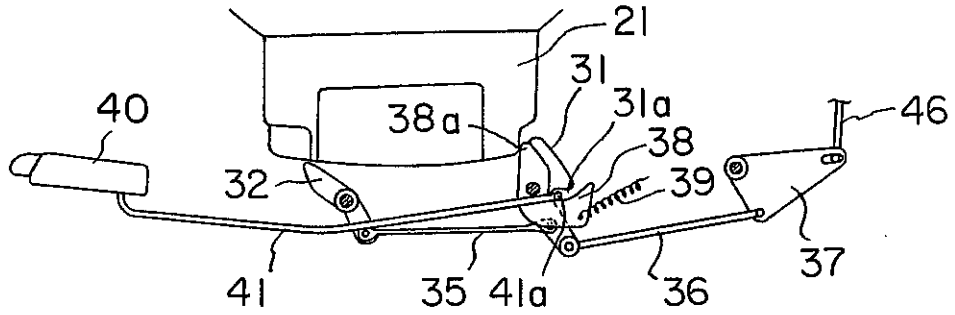

FIG. 15A

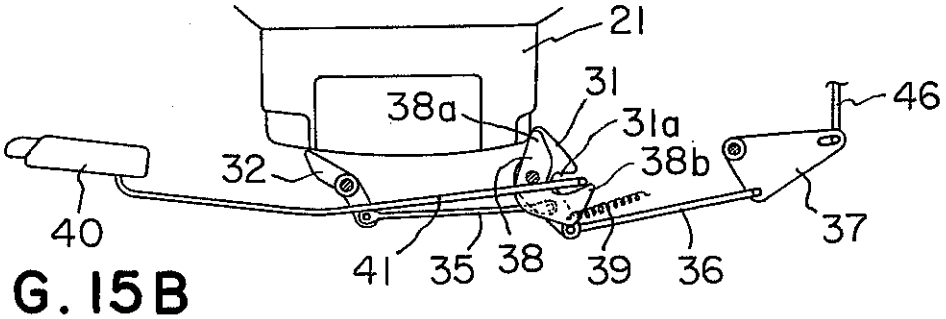

FIG. 15B

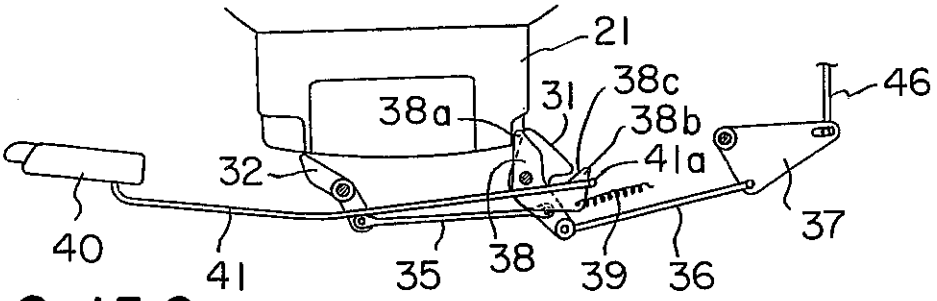

FIG. 15C

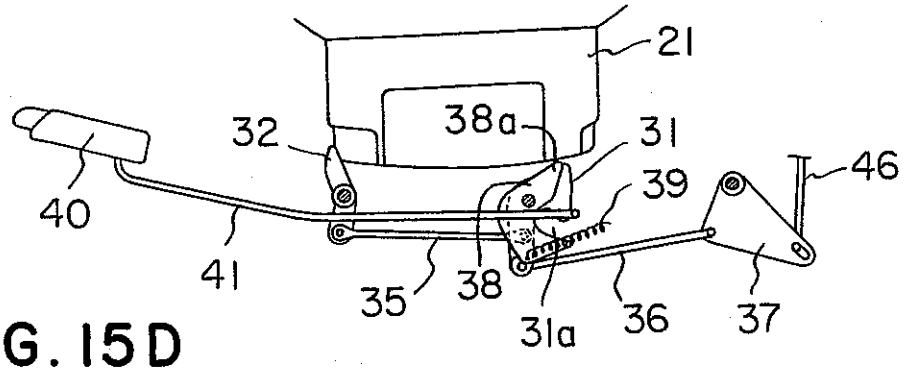

FIG. 15D

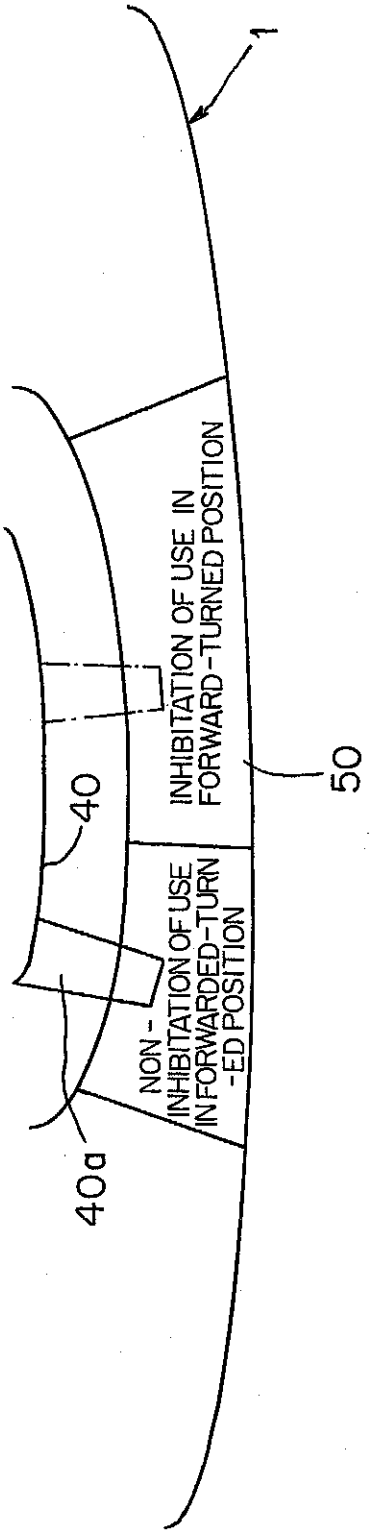
1
INHIBITATION OF USE IN FORWARD-TURNED POSITION
50
40
NON-INHIBITATION OF USE IN FORWARDED-TURN-ED POSITION
40a

FIG. 16

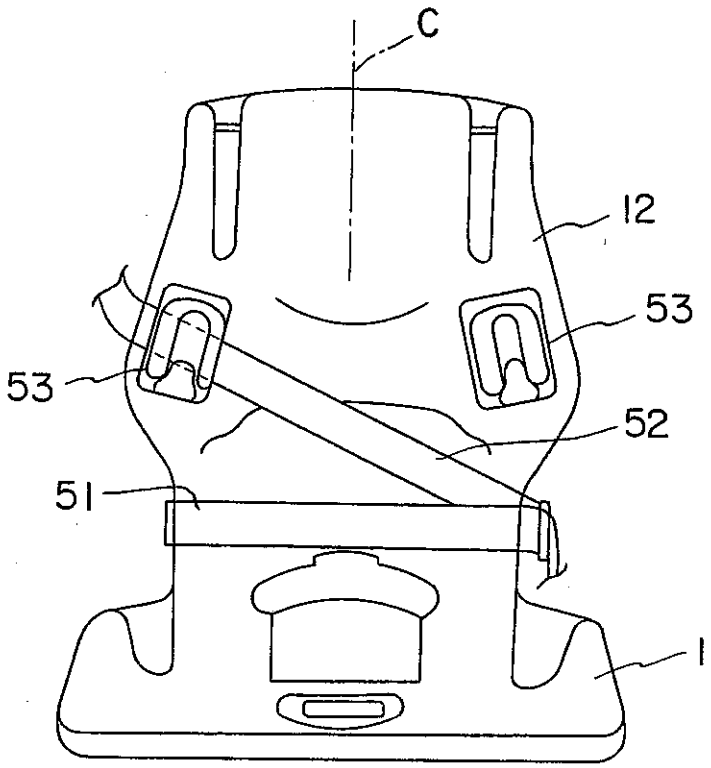

FIG. 17

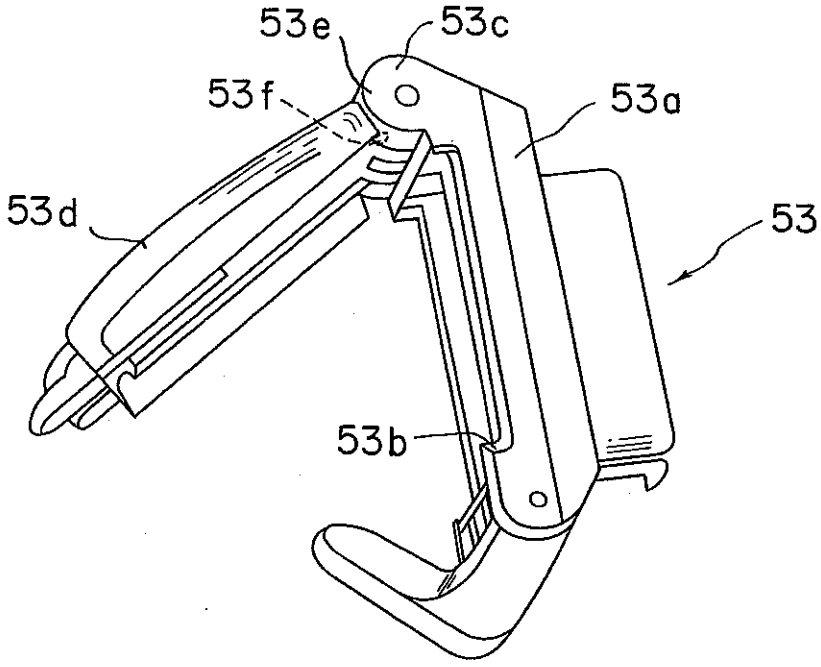

FIG. 18

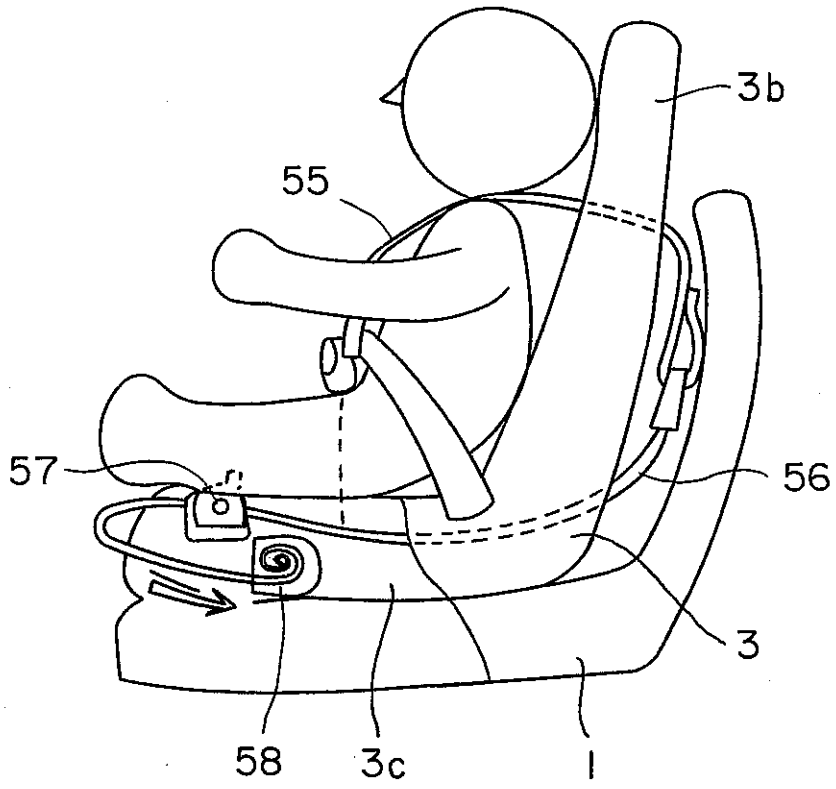

FIG. 19