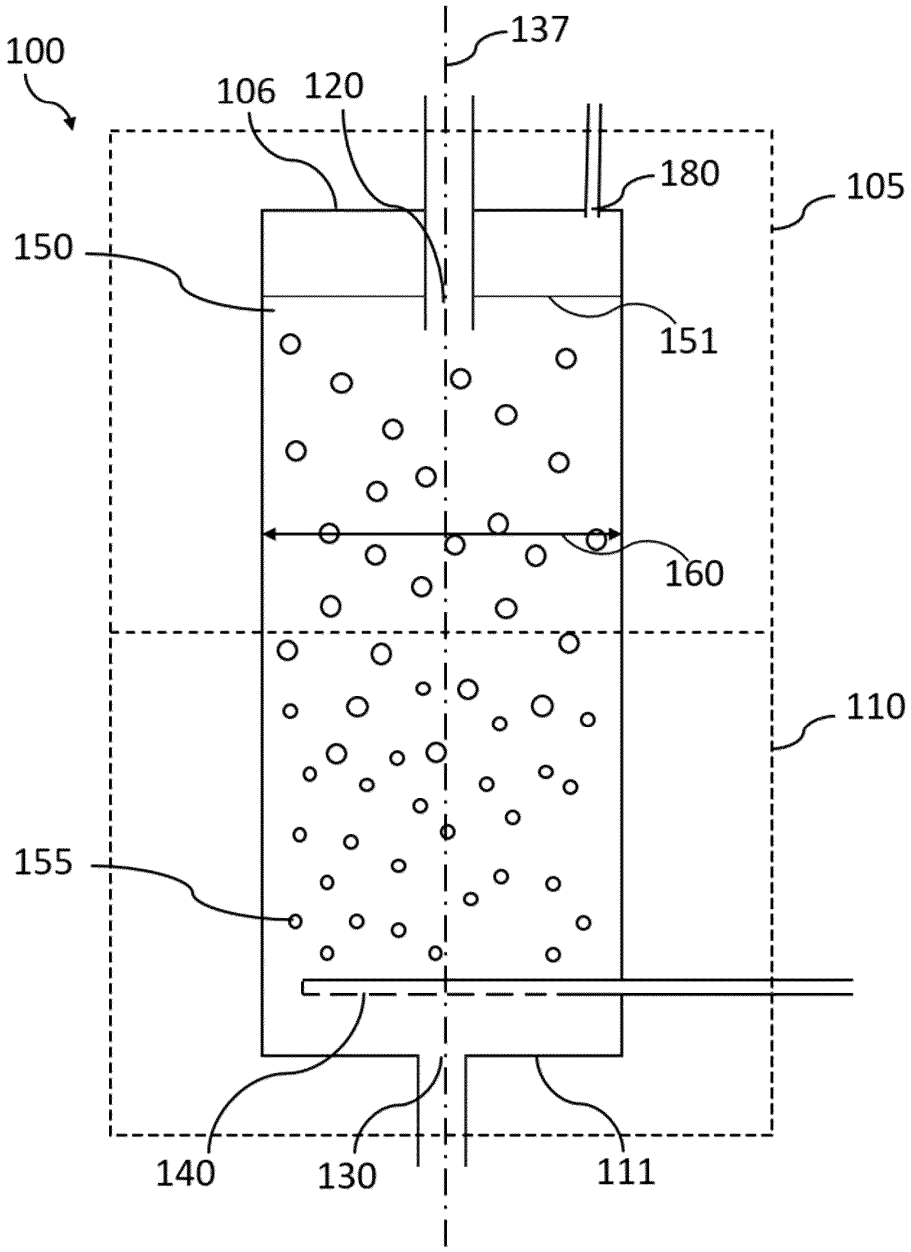

Figure 1

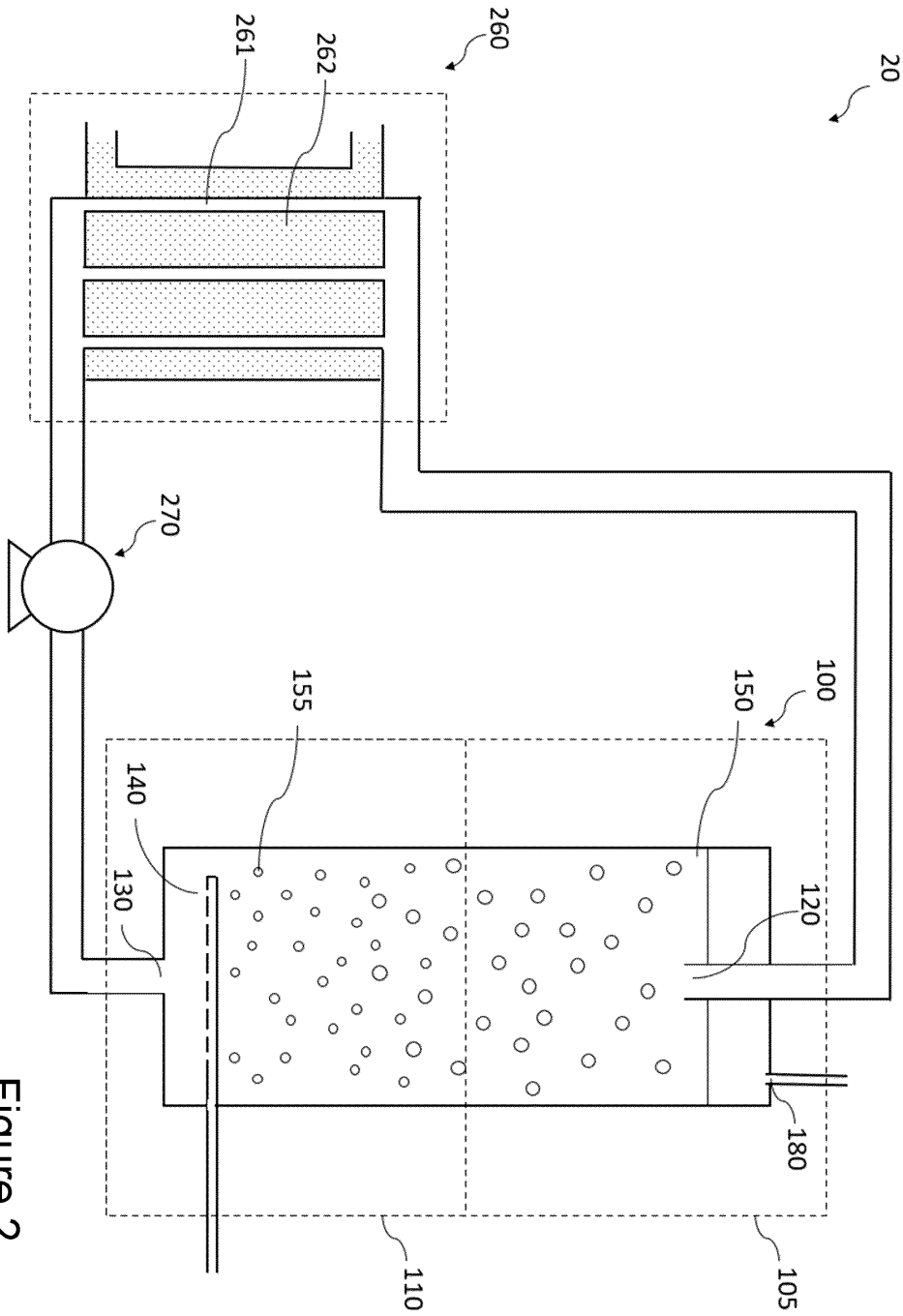

Figure 2

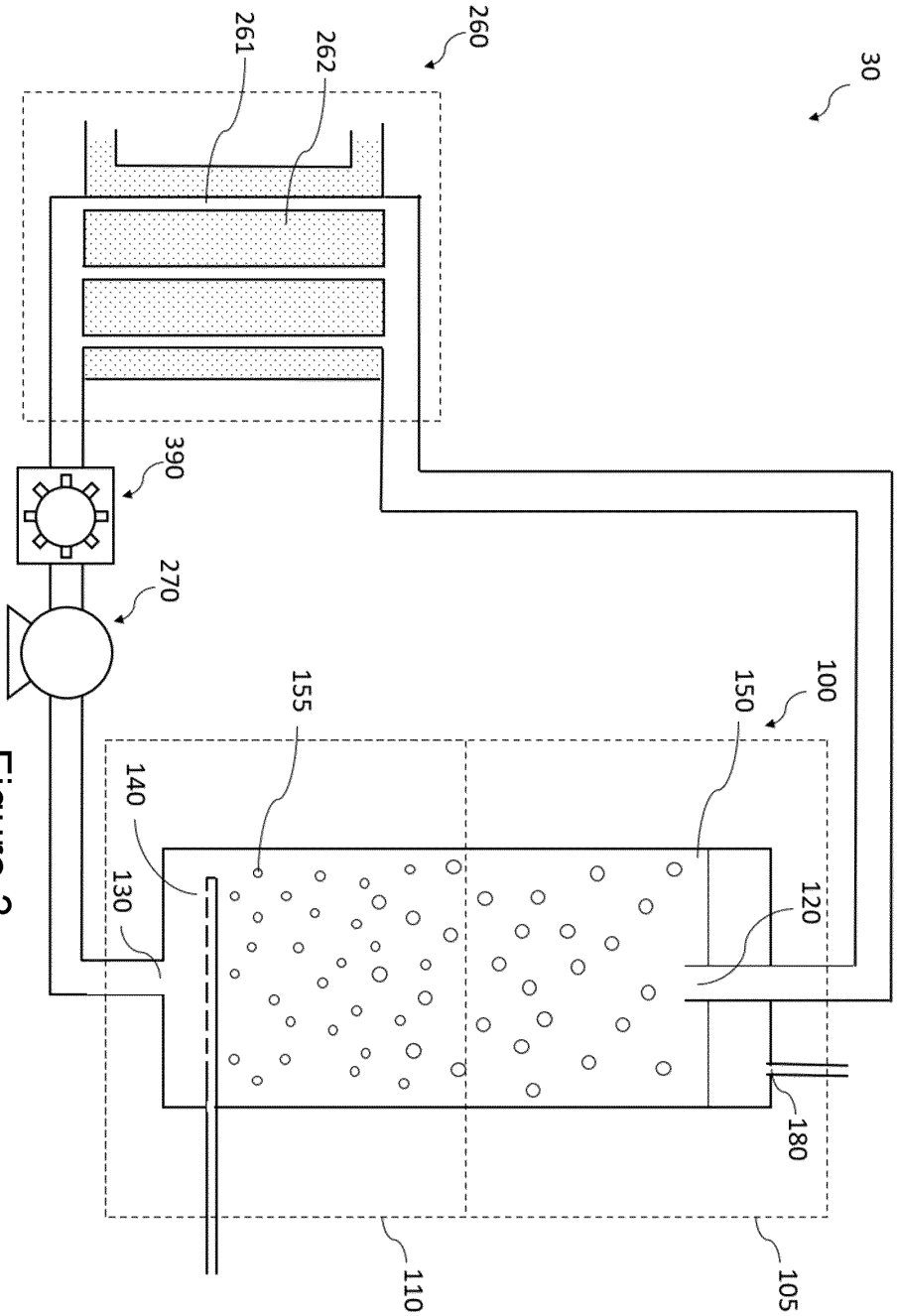

Figure 3

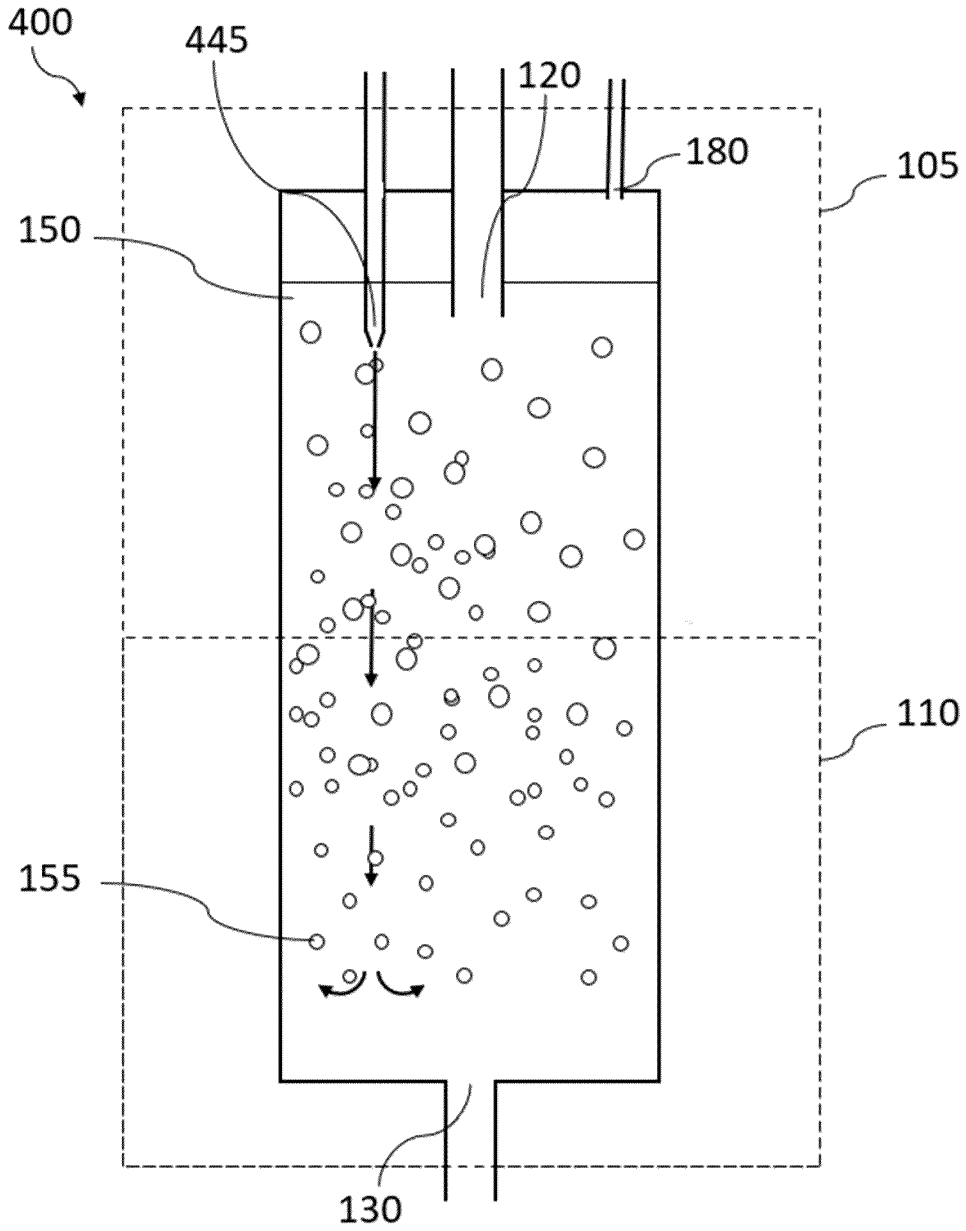

Figure 4

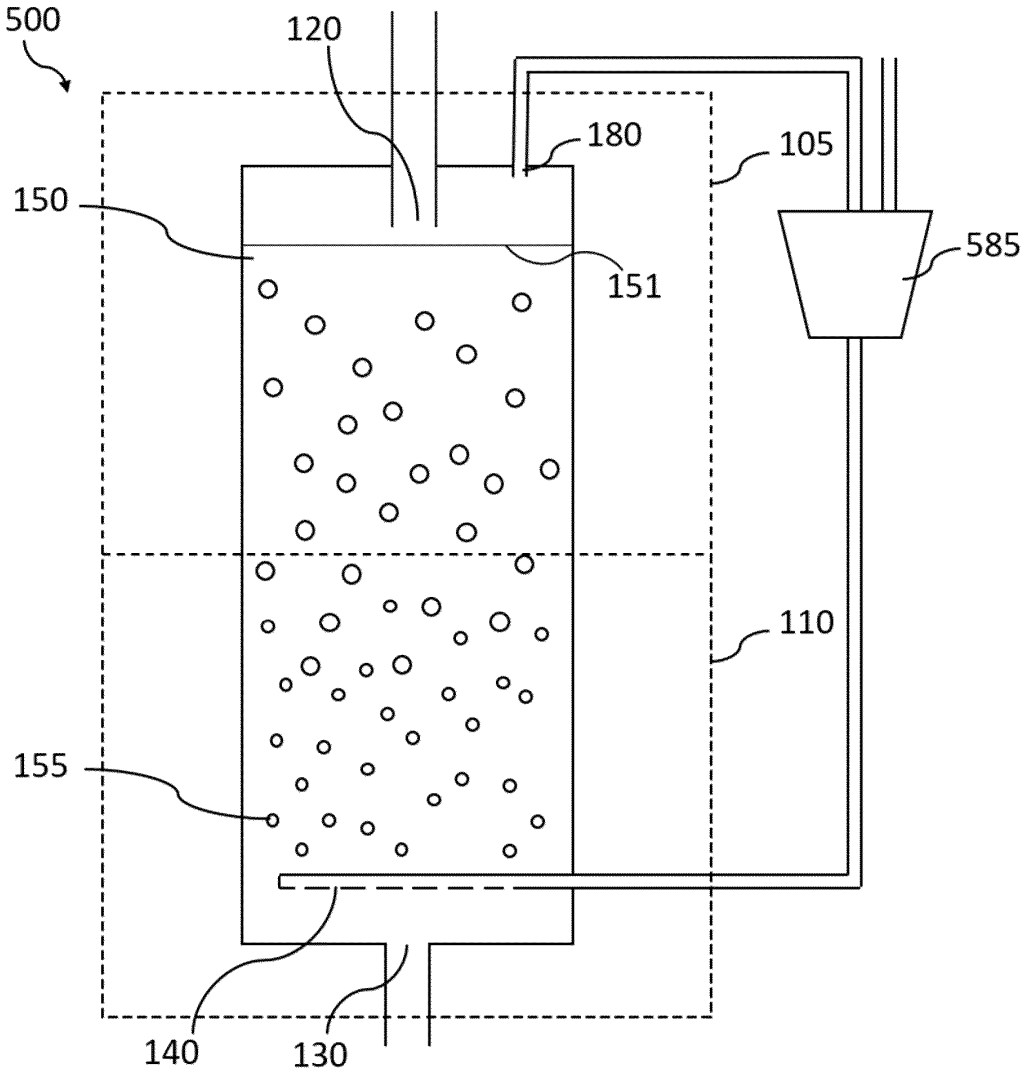

Figure 5

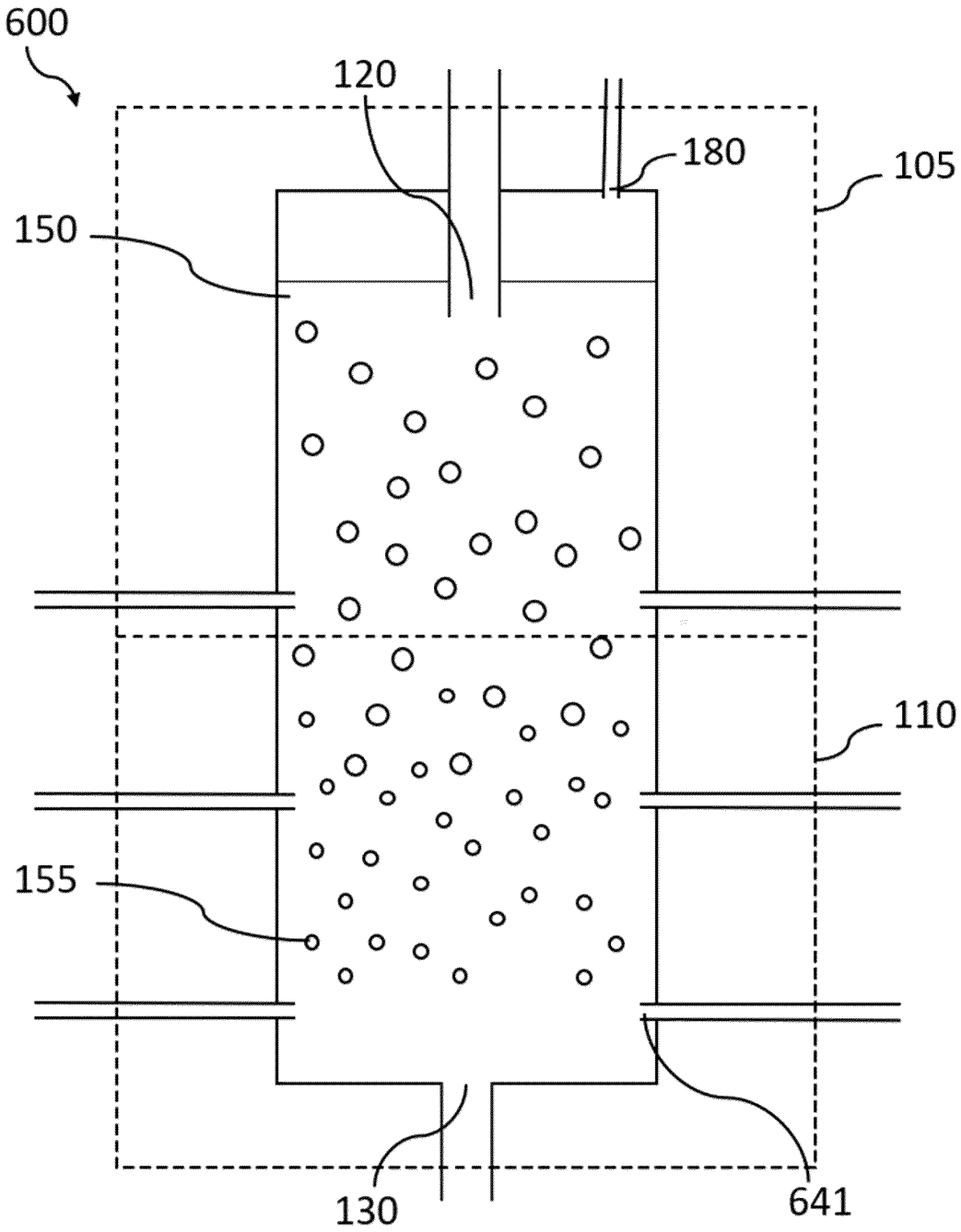

Figure 6

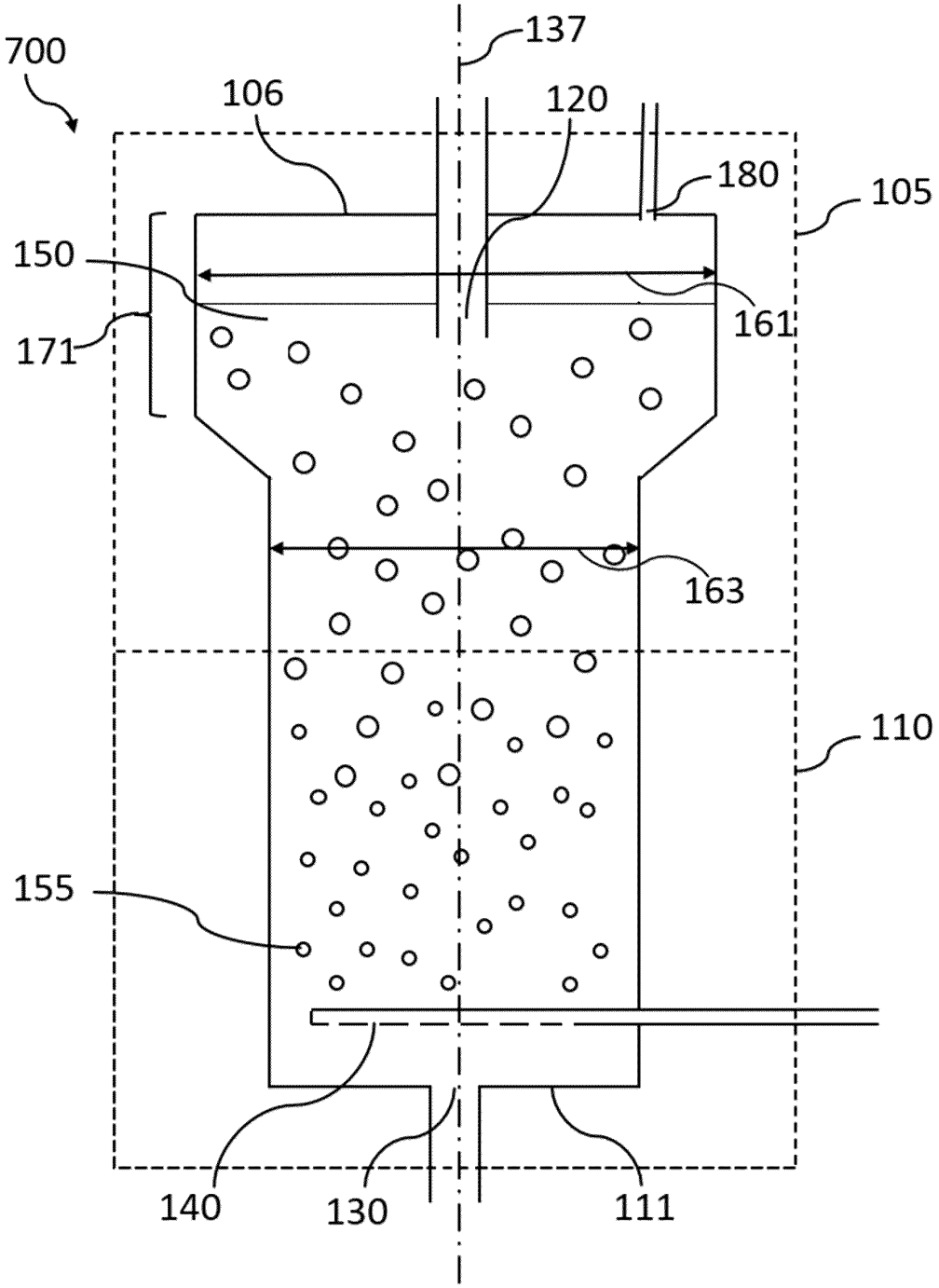

Figure 7

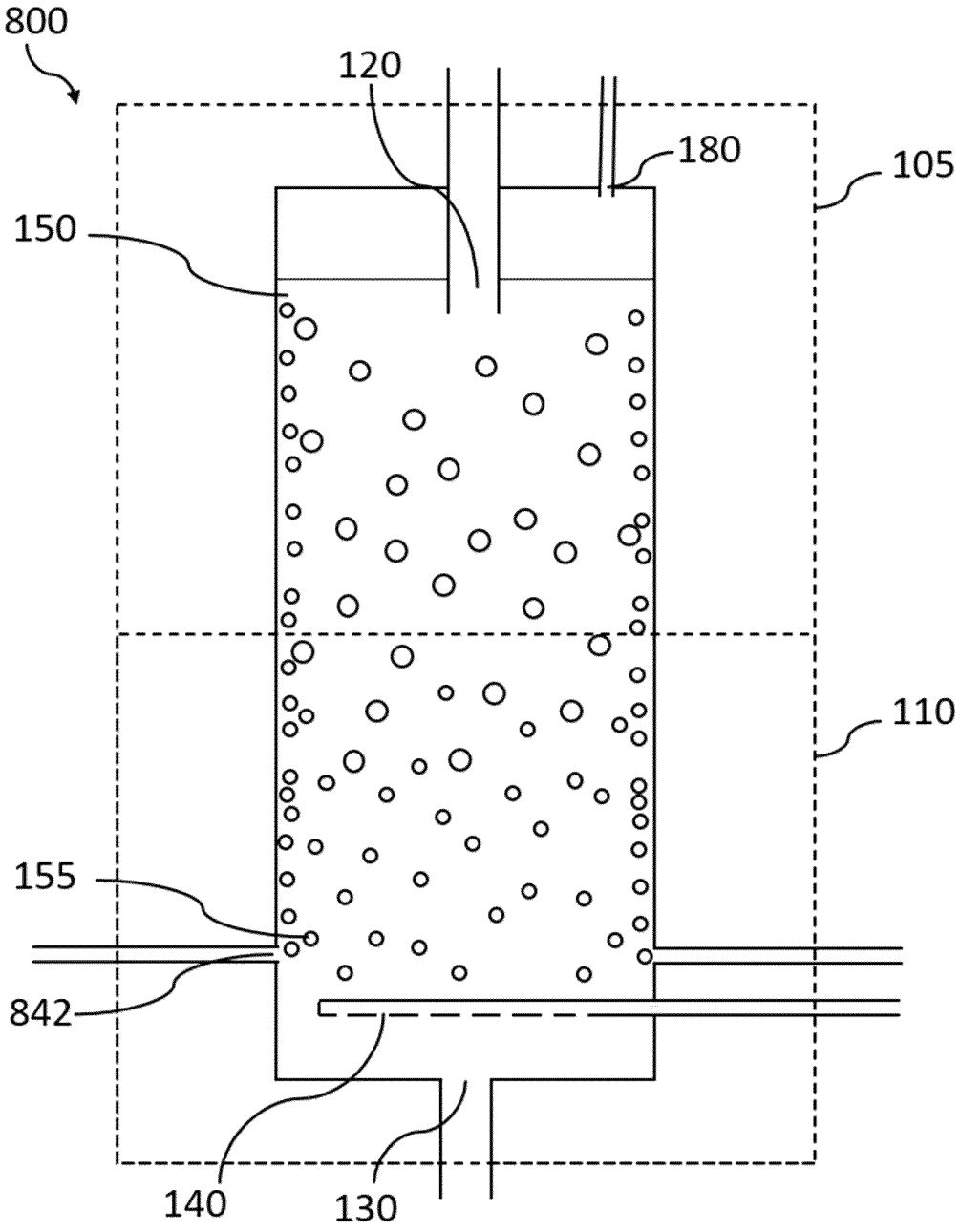

Figure 8

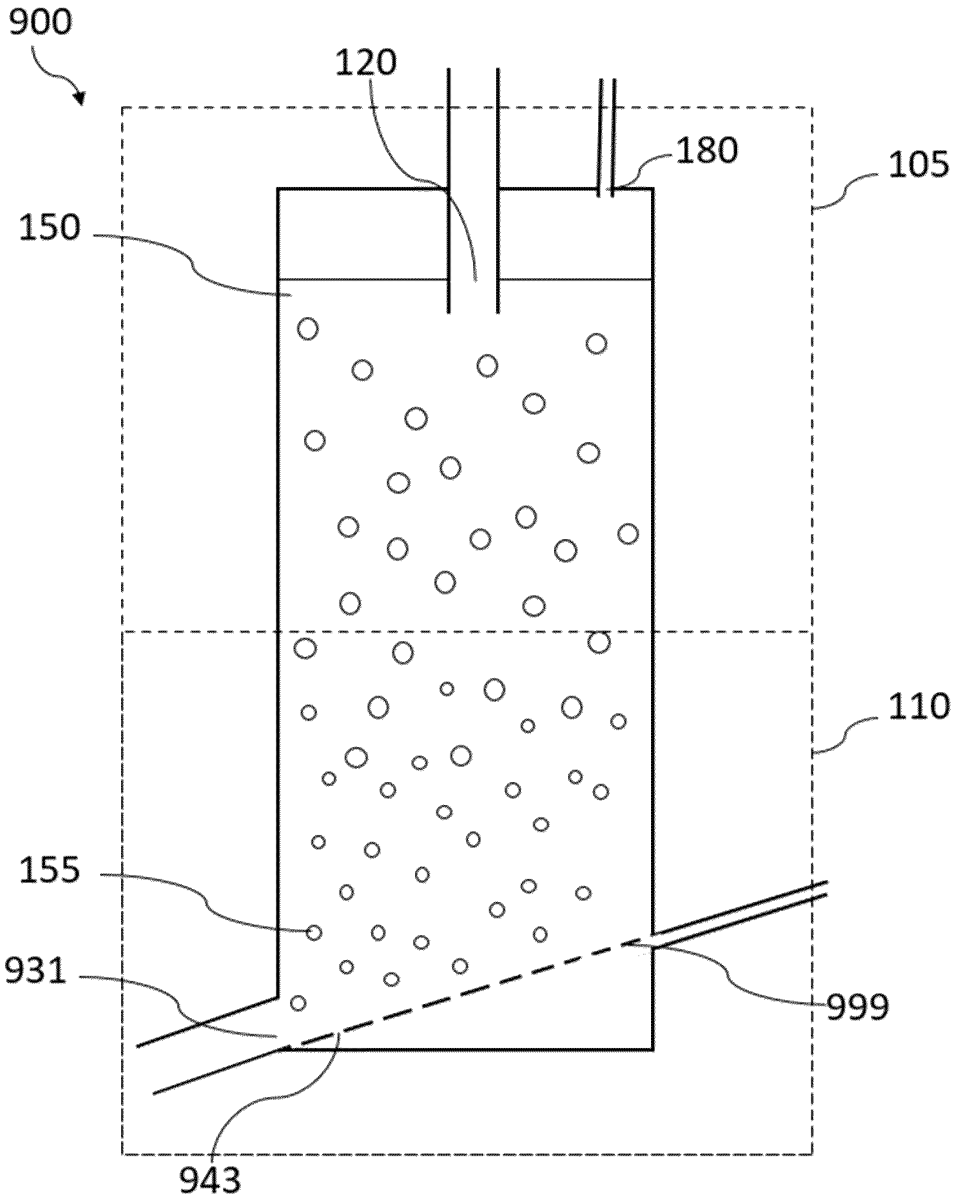

Figure 9

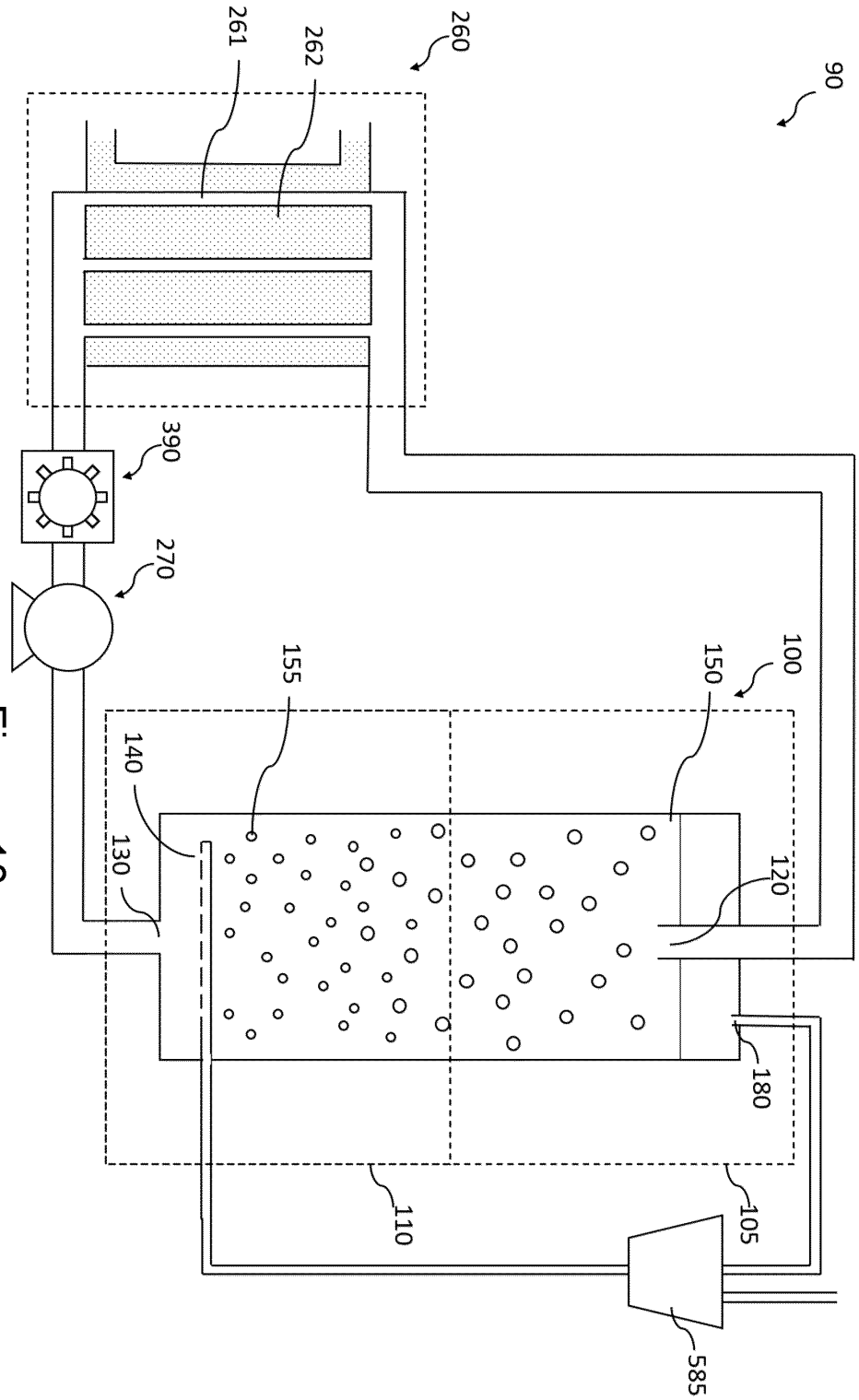

Figure 10

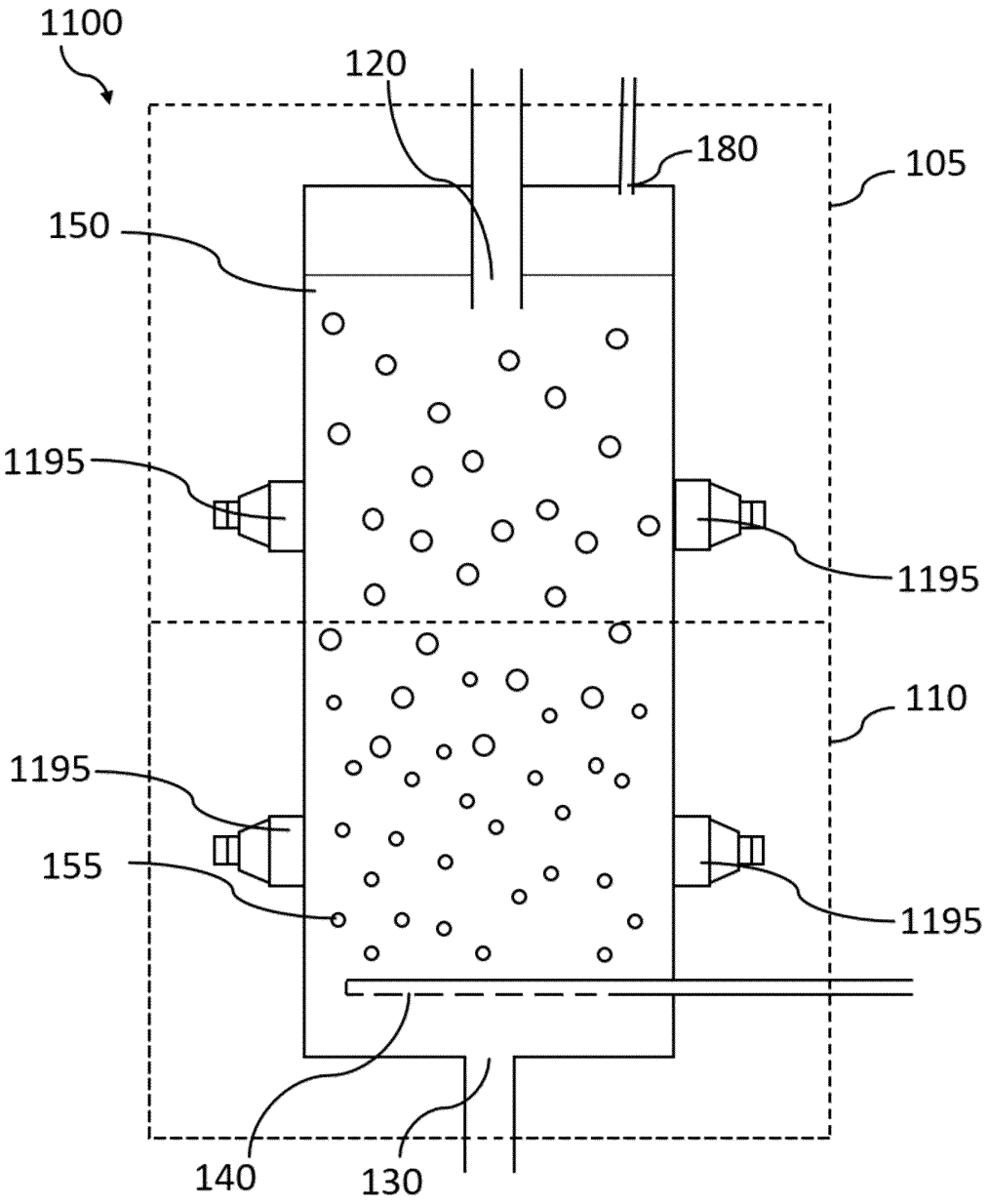

Figure 11

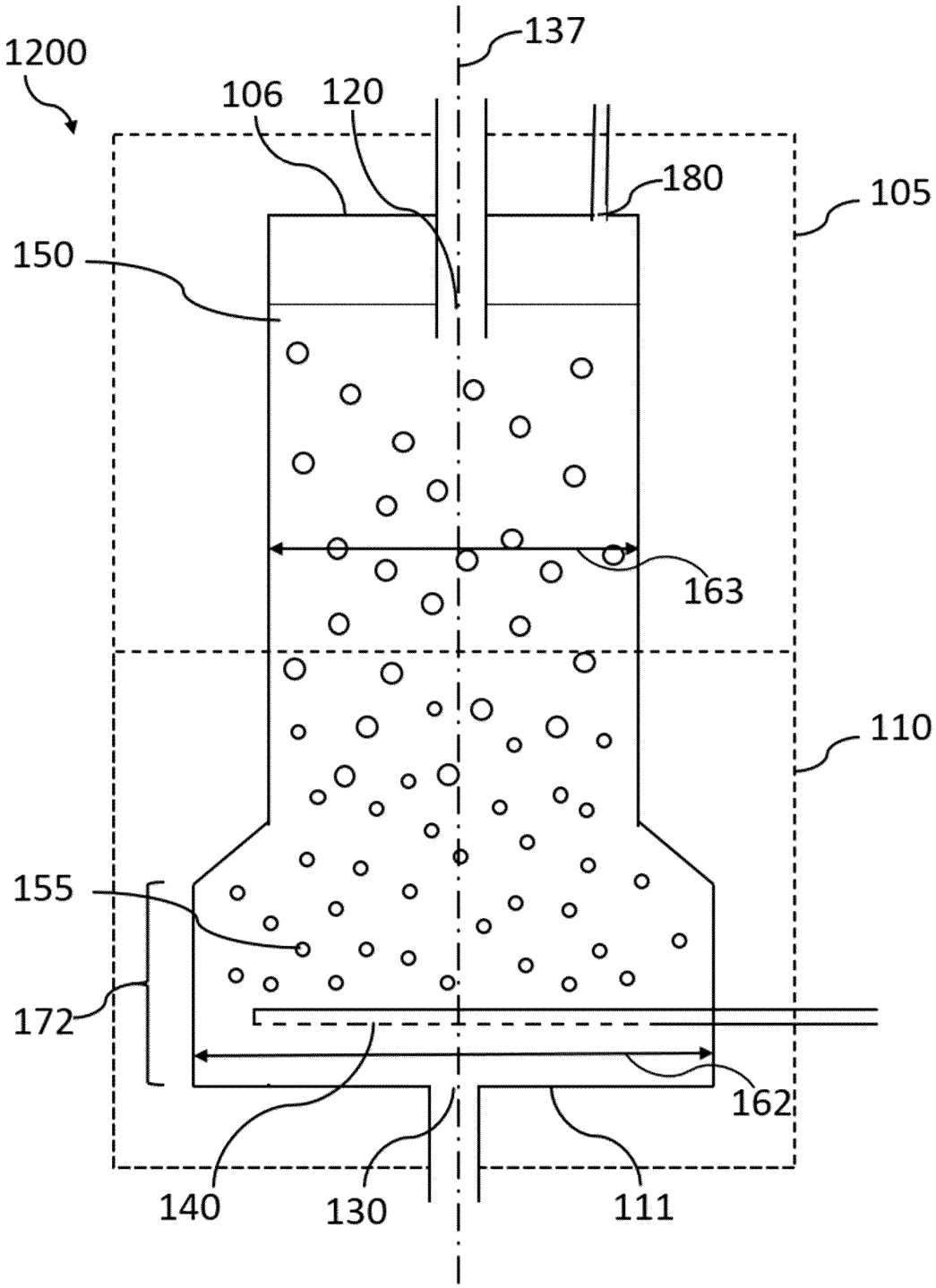

Figure 12

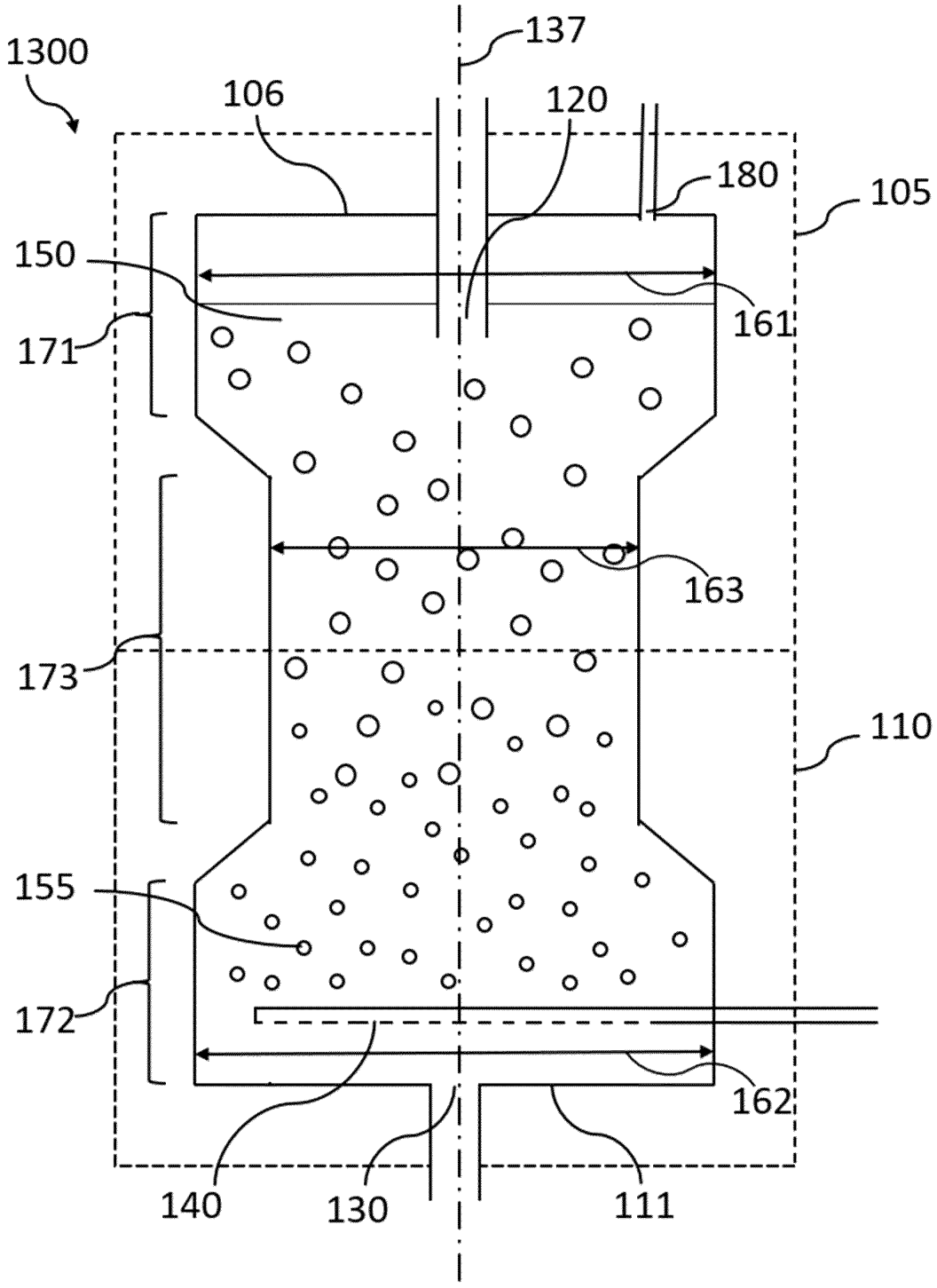
1300
137
106
120
180
105
150
161
171
163
173
110
155
172
162
140
130
111

Figure 13

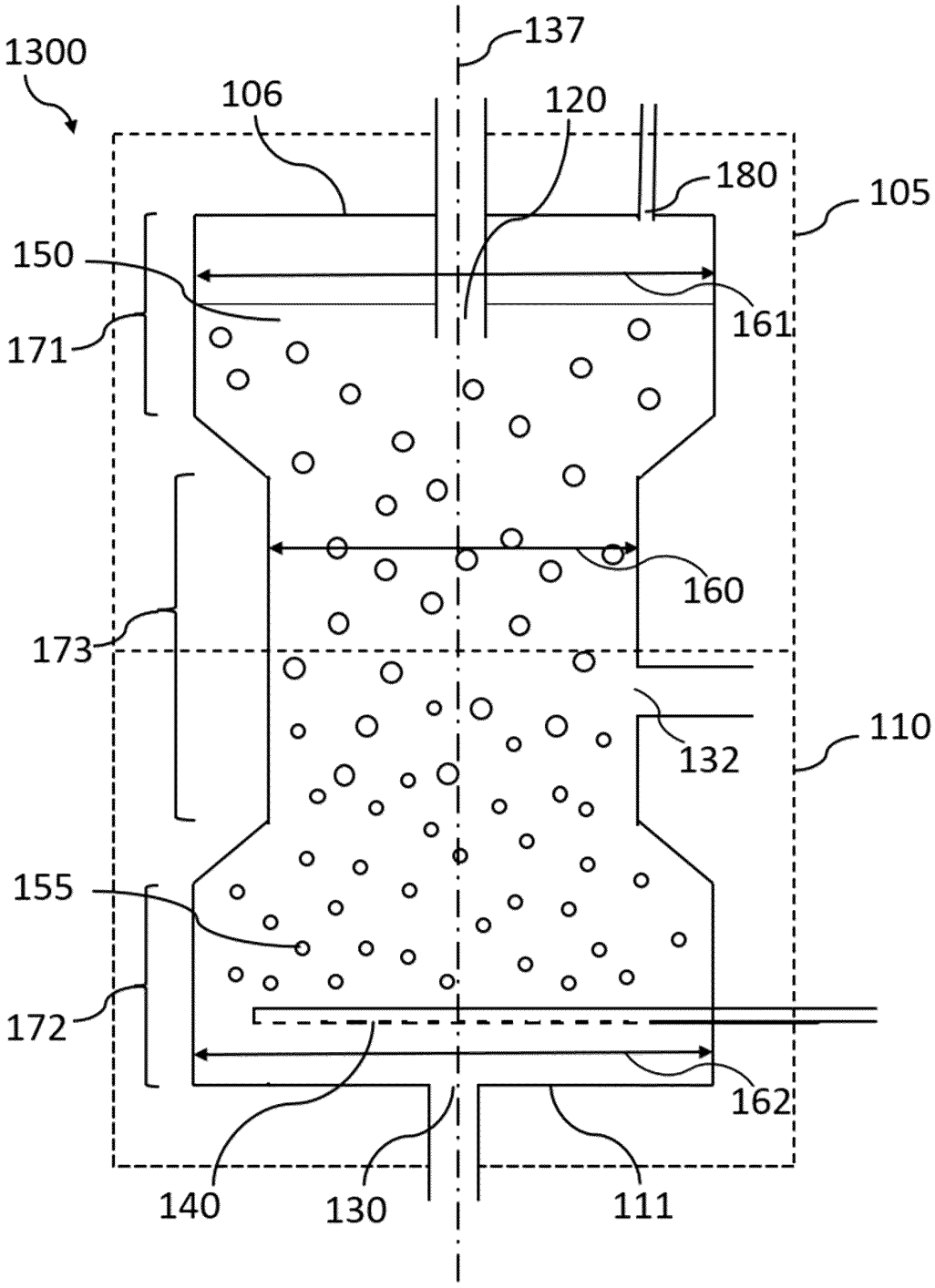
1300
137
106
120
180
105
150
161
171
160
173
110
132
155
172
162
140
130
111

Figure 14

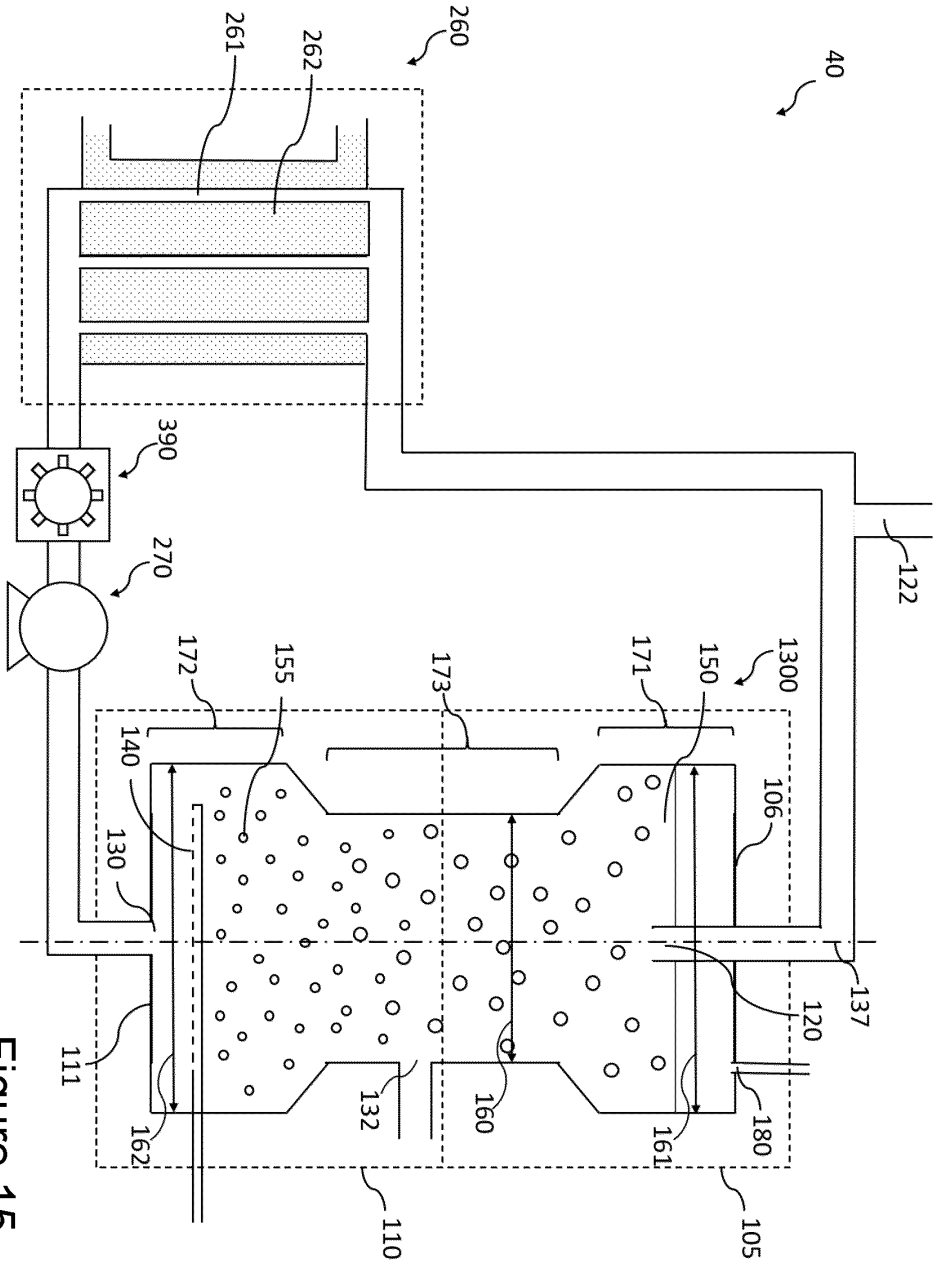
40
260
261
262
390
270
122
1300
150
171
172
155
173
140
130
106
120
137
111
132
160
161
162
180
110
105

Figure 15

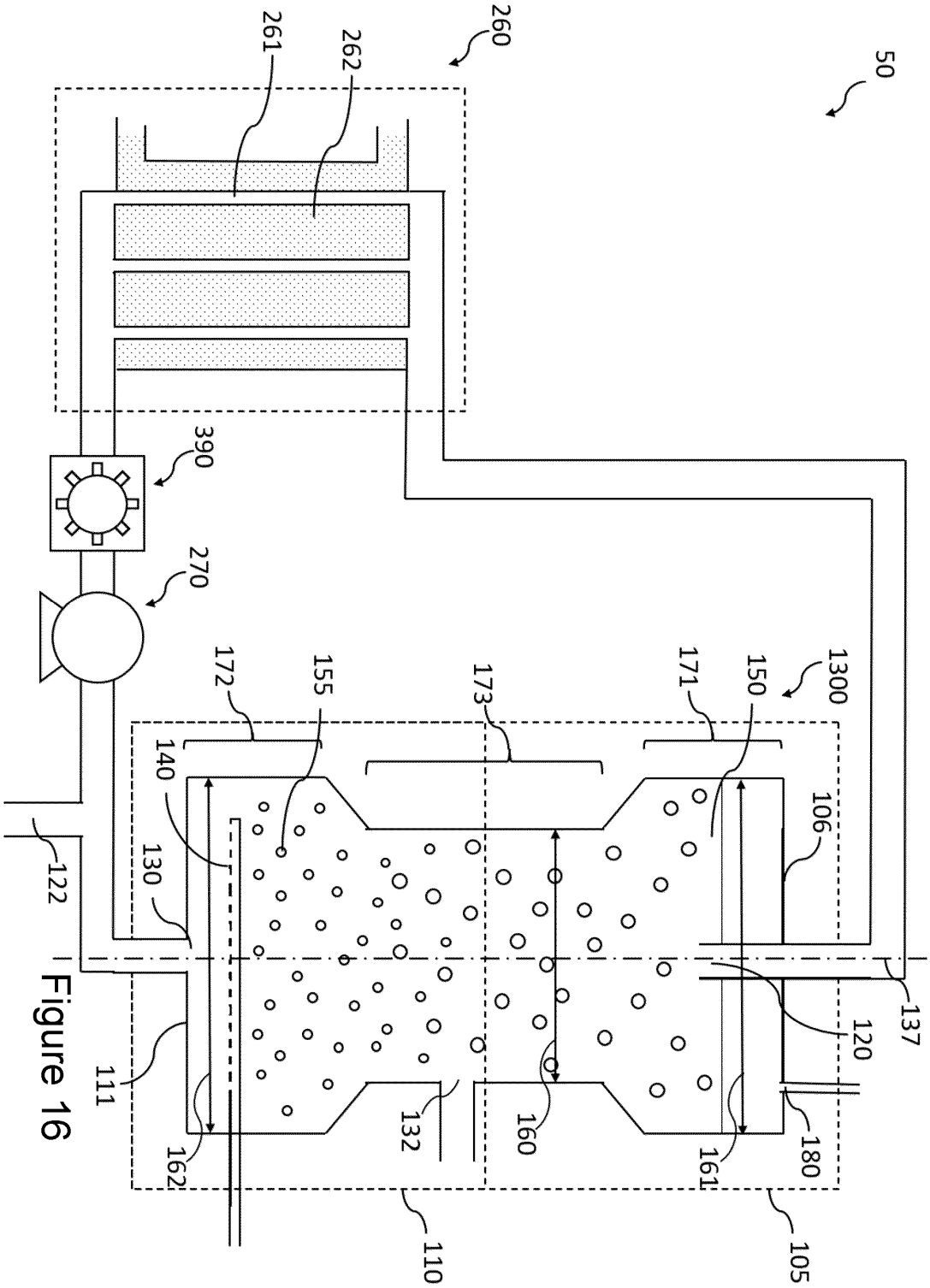
50
260
261
262
390
270
1300
150
171
173
155
172
140
130
122
106
120
137
111
162
132
160
161
180
110
105

Figure 16

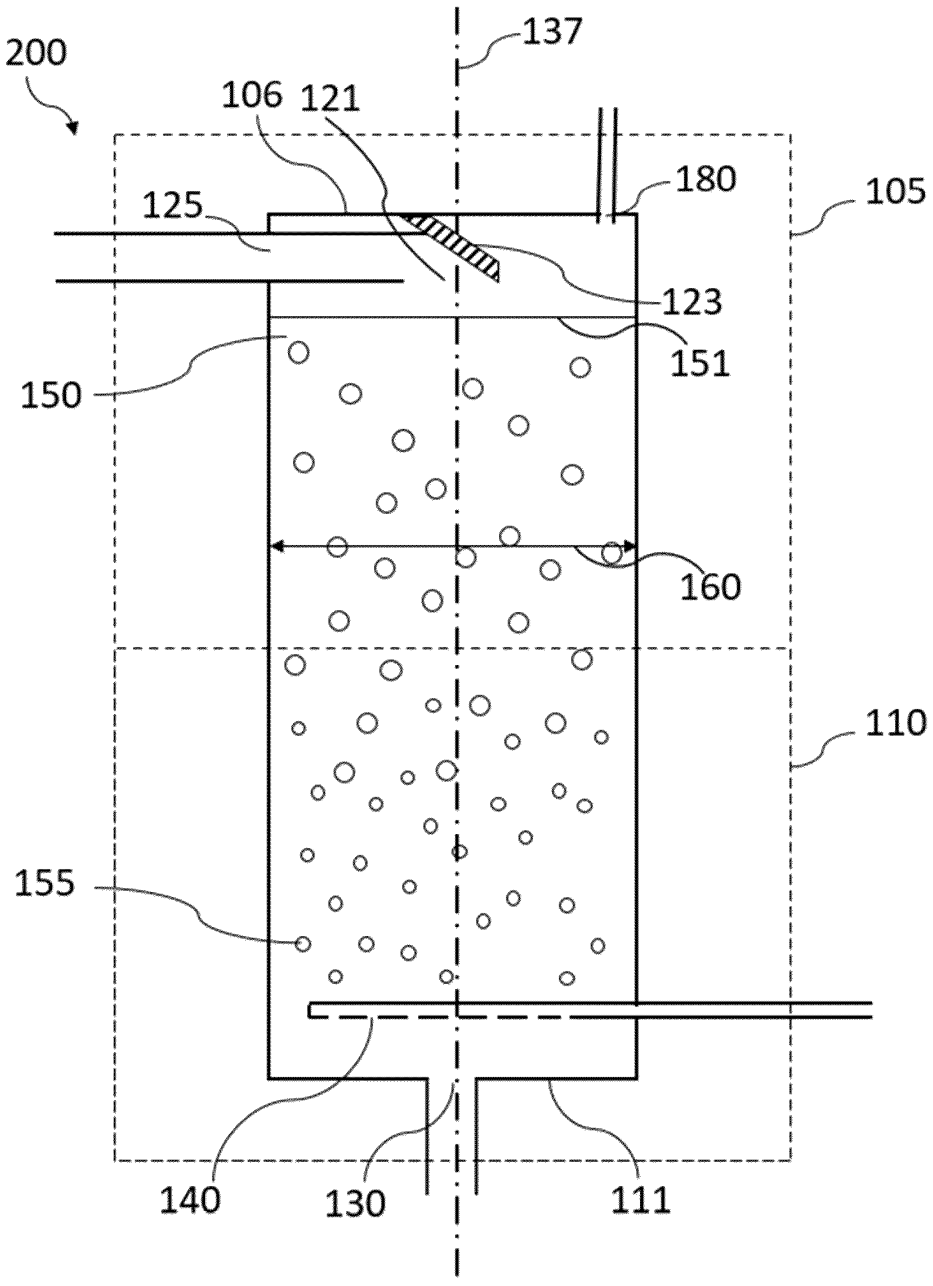

Figure 17