CLAIMS

What is claimed is:

1. A precursor of formula I:

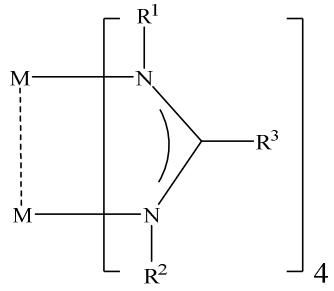

wherein

(i) M is one of chromium, molybdenum and tungsten; and

(ii) R^1 and R^2, are each independently selected from the group consisting of a Methyl group and an ethyl group; and

(iii) R^3 is a hydrogen.

2. The precursor of claim 1, wherein M is chromium.

3. The precursor of claim 1, wherein M is molybdenum.

4. The precursor of claim 1, wherein M is tungsten.

5. The precursor of claim 1, wherein each of R^1 and R^2 is a methyl group.

6. The precursor of claim 1, wherein R^3 is H.

7. The precursor of claim 1 having the formula:

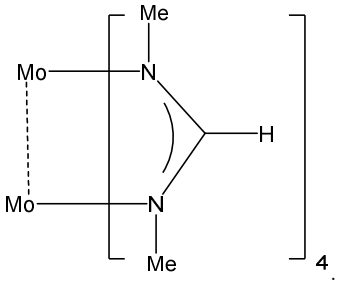

8. The precursor of claim 7 characterized by an x-ray powder diffraction pattern substantially in accordance with that shown in FIG. 14.

9. The precursor of claim 7 characterized by an x-ray powder diffraction pattern comprising four or more 2θ values selected from the group consisting of:

Peak No.	**2 Theta (degree ±0.2)**
1	11.16±0.2
2	11.98±0.2
3	13.00±0.2
4	13.98±0.2
5	16.64±0.2
6	18.52±0.2
7	18.72±0.2
8	20.54±0.2
9	21.34±0.2
10	26.06±0.2
11	26.44±0.2
12	26.88±0.2
13	27.54±0.2
14	28.82±0.2
15	33.64±0.2
16	33.98±0.2
17	37.34±0.2
18	37.78±0.2

10. The precursor of claim 7 characterized by an x-ray powder diffraction pattern having characteristic peaks at 11.16±0.2, 11.98±0.2, 13.00±0.2, 13.98±0.2 and 16.64±0.2 degrees 2θ.

11. The precursor of claim 1 having the formula:

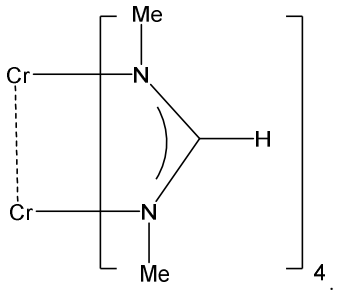

12. The precursor of claim 1 having the formula:

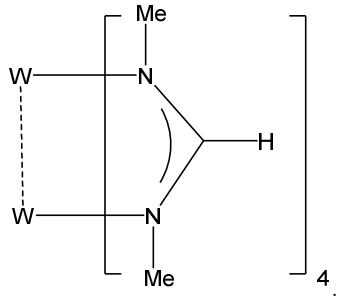

13. The precursor of claim 1 having the formula:

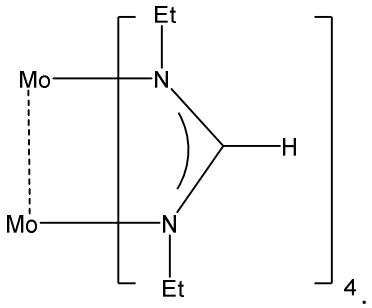

14. The precursor of claim 13 characterized by an x-ray powder diffraction pattern substantially in accordance with that shown in FIG. 15.

15. The precursor of claim 13 characterized by an x-ray powder diffraction pattern comprising four or more 2θ values selected from the group consisting of:

Peak No.	**2 Theta (degree ± 0.2)**
1	7.36±0.2
2	10.78±0.2
3	11.36±0.2
4	11.62±0.2
5	11.86±0.2
6	13.6±0.2
7	14.84±0.2
8	17.18±0.2
9	17.56±0.2
10	20.78±0.2

11	22±0.2
12	23.14±0.2
13	25.14±0.2
14	26.2±0.2
15	31.9±0.2
16	32.86±0.2
17	33.4±0.2

16. The precursor of claim 13 characterized by an x-ray powder diffraction pattern having characteristic peaks at 10.78±0.2, 11.36±0.2, 11.62±0.2, 11.86±0.2 and 13.6±0.2 degrees 2θ.

17. The precursor of claim 1 having the formula:

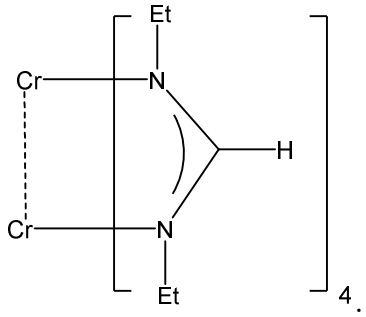

18. The precursor of claim 1 having the formula:

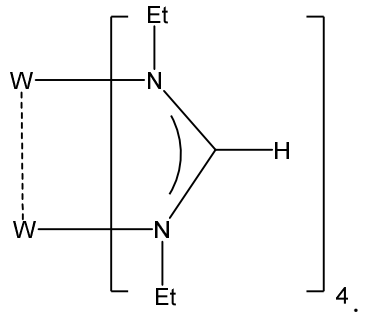

19. The precursor of claim 1 having the formula:

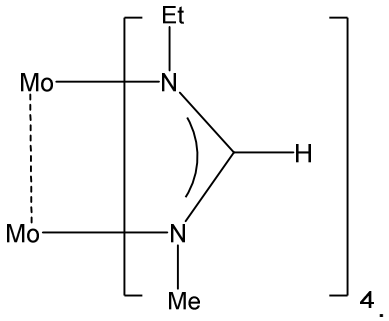

20. The precursor of claim 1 having the formula:

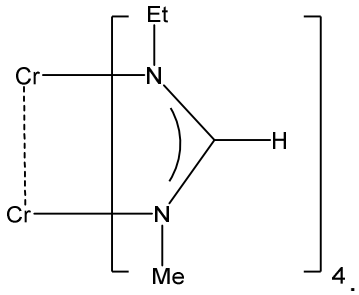

21. The precursor of claim 1 having the formula:

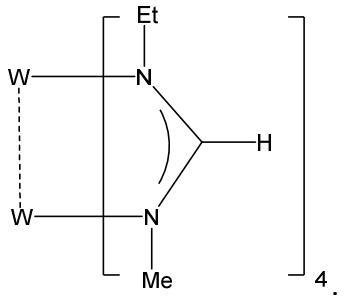

22. A method for forming a transition metal-containing film on at least one surface of a substrate comprising:

a. providing the at least one surface of the substrate in a reaction vessel;

b. forming a transition metal-containing film on the at least one surface by a thermal deposition process chosen from a chemical vapor deposition (CVD) process and an atomic layer deposition (ALD) process using one or more precursors of claim 1 as a metal source compound for the deposition process.