FIG.1

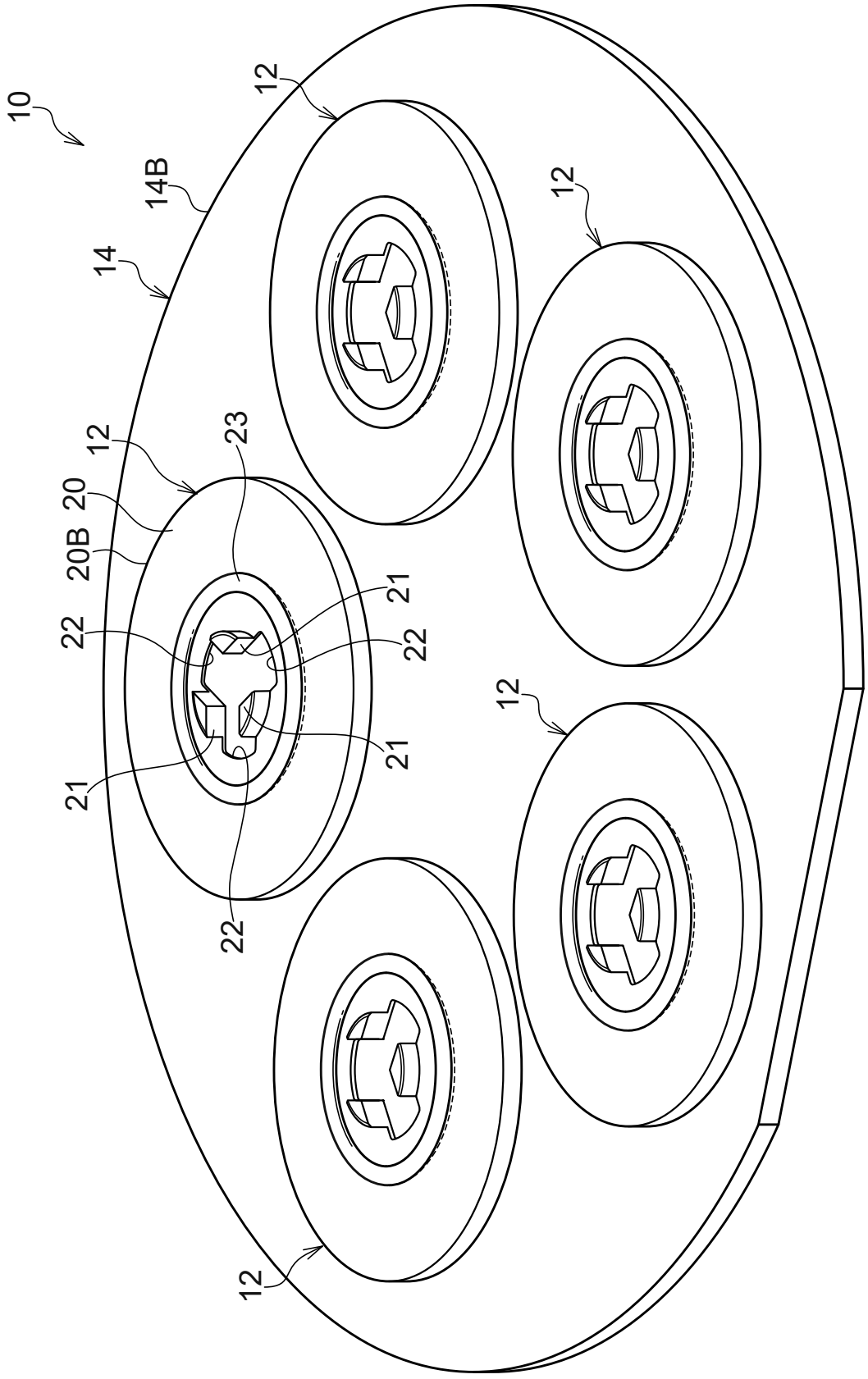

FIG.2

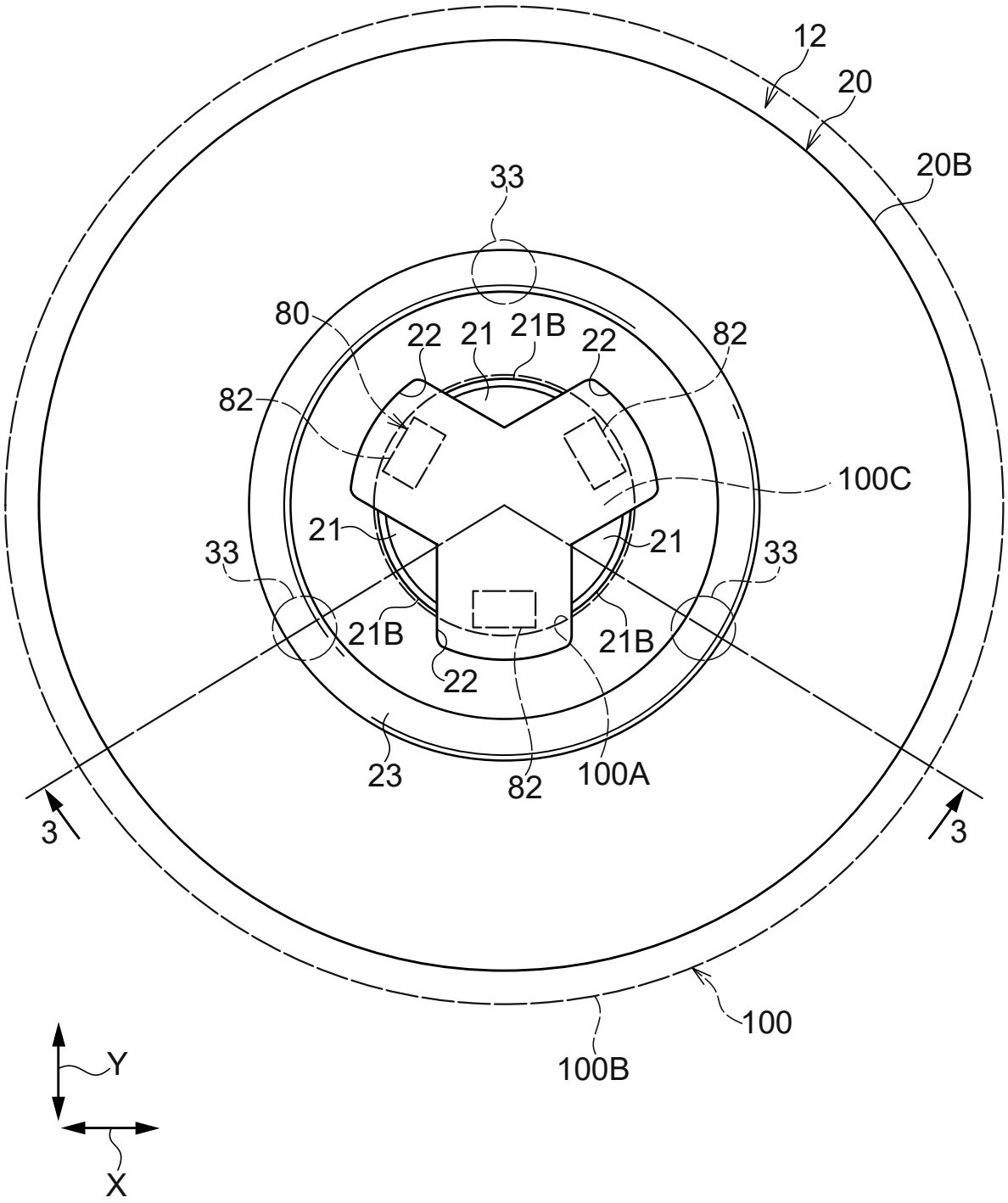
12
20
20B
33
80
22
21
21B
22
82
82
100C
21
21
33
33
21B
21B
22
23
82
100A
3
3
100
100B
Y
X

FIG.3

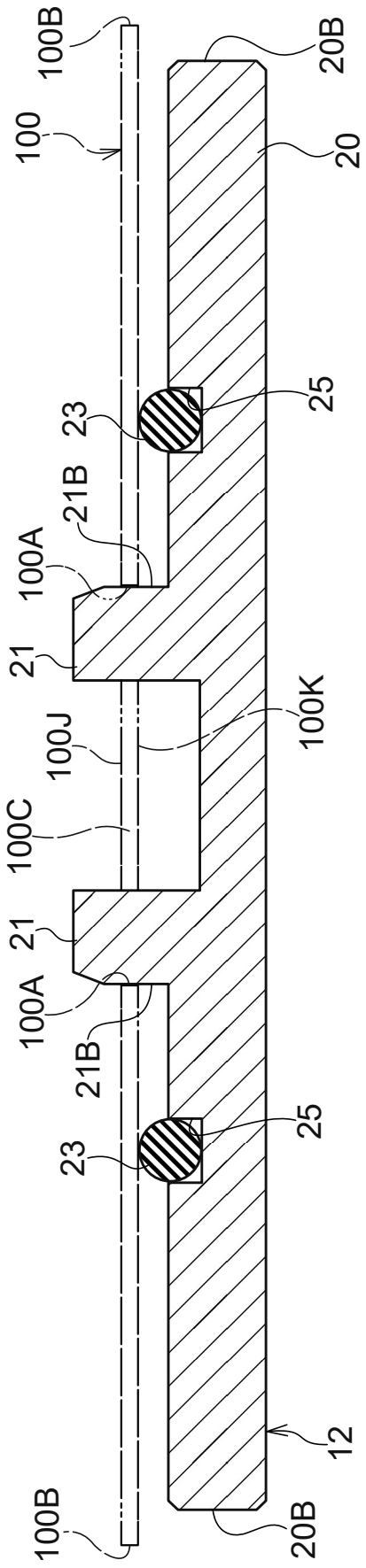
100B
20B
100
20
25
23
21B
100A
21
100K
100J
100C
21
100A
21B
25
23
12
100B
20B

FIG.4

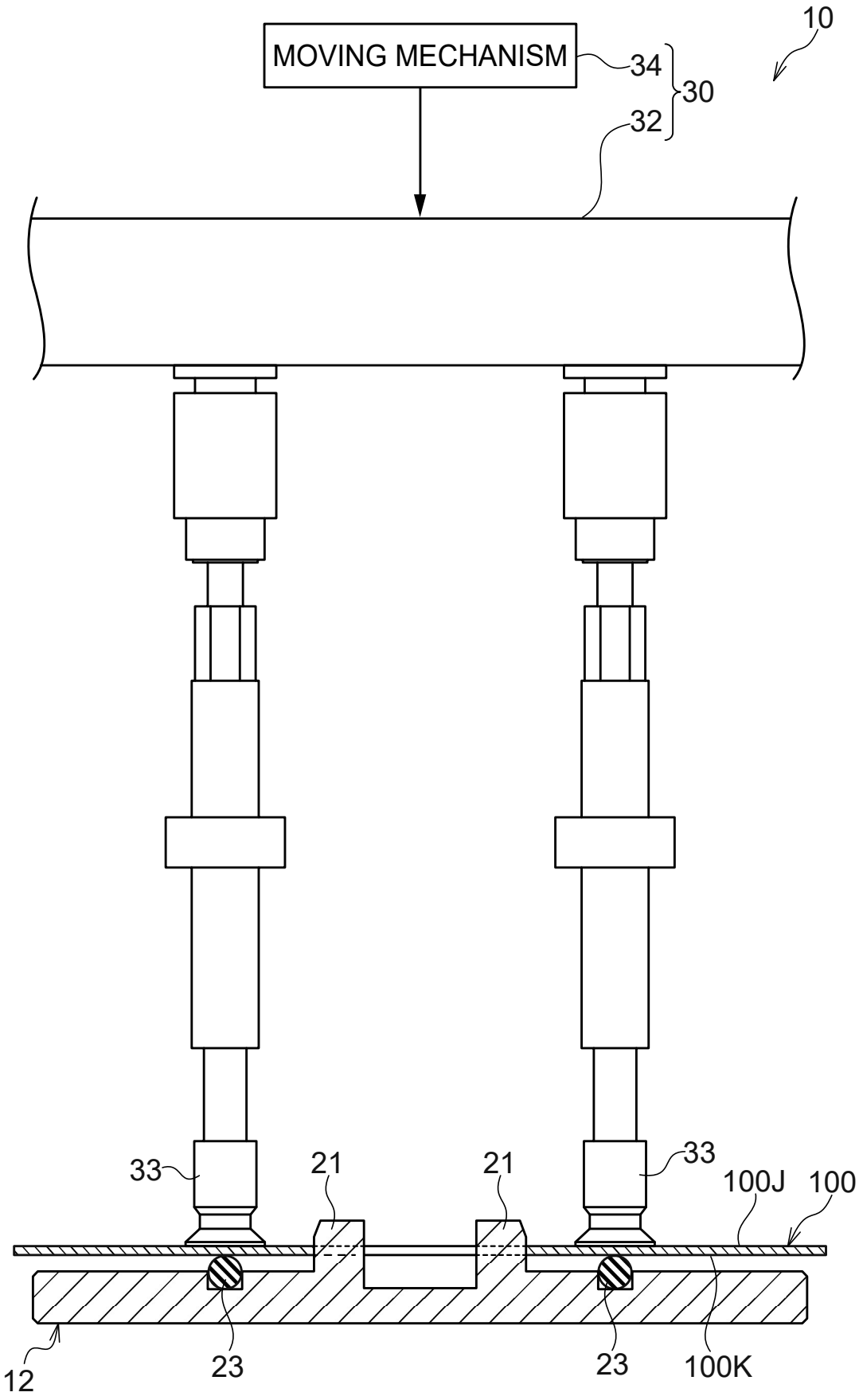

FIG.5

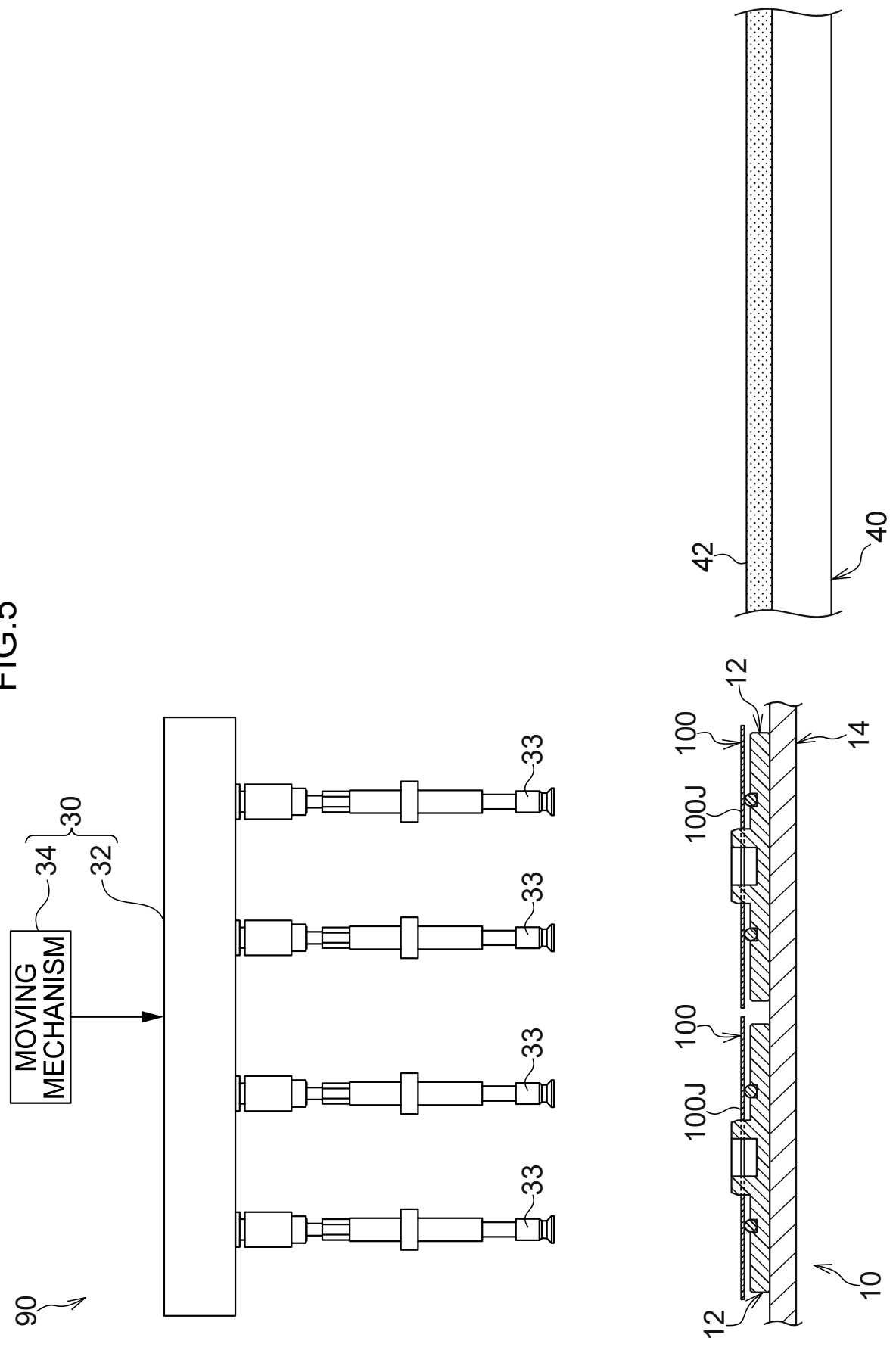
90
MOVING MECHANISM
34
30
32
33
33
33
33
42
40
12
100
100J
100
100J
14
10
12

FIG.6

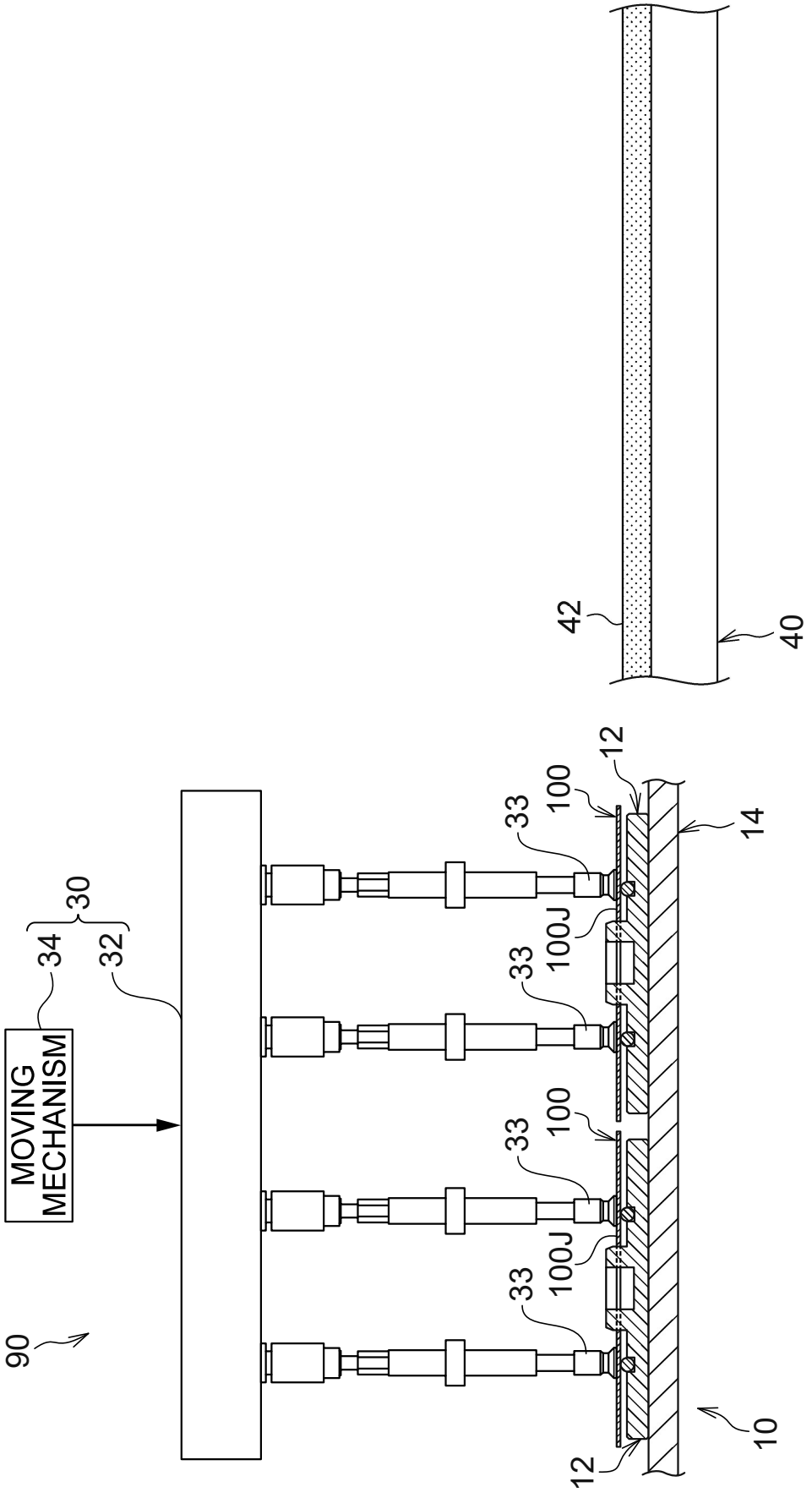

FIG.7

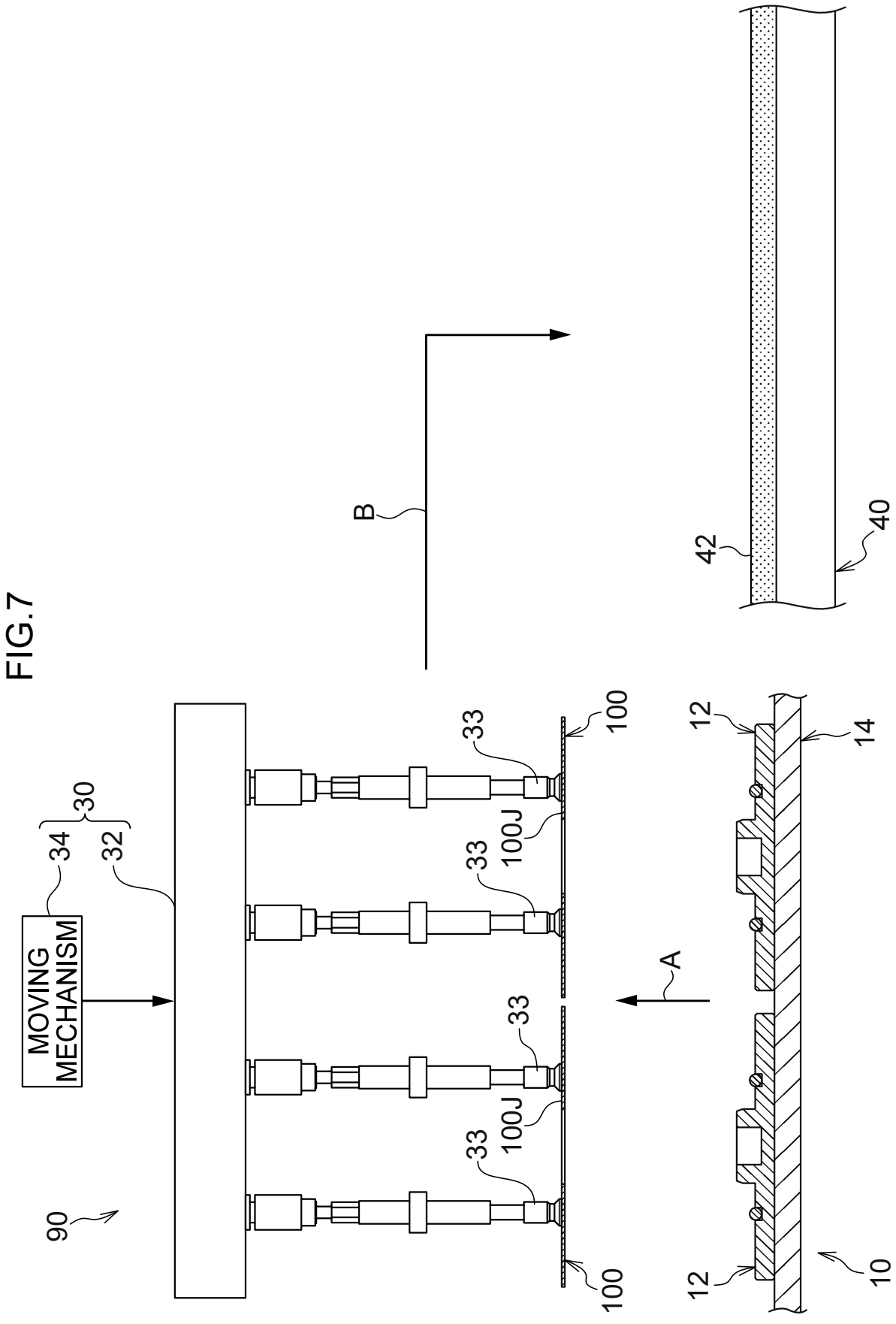

FIG.8

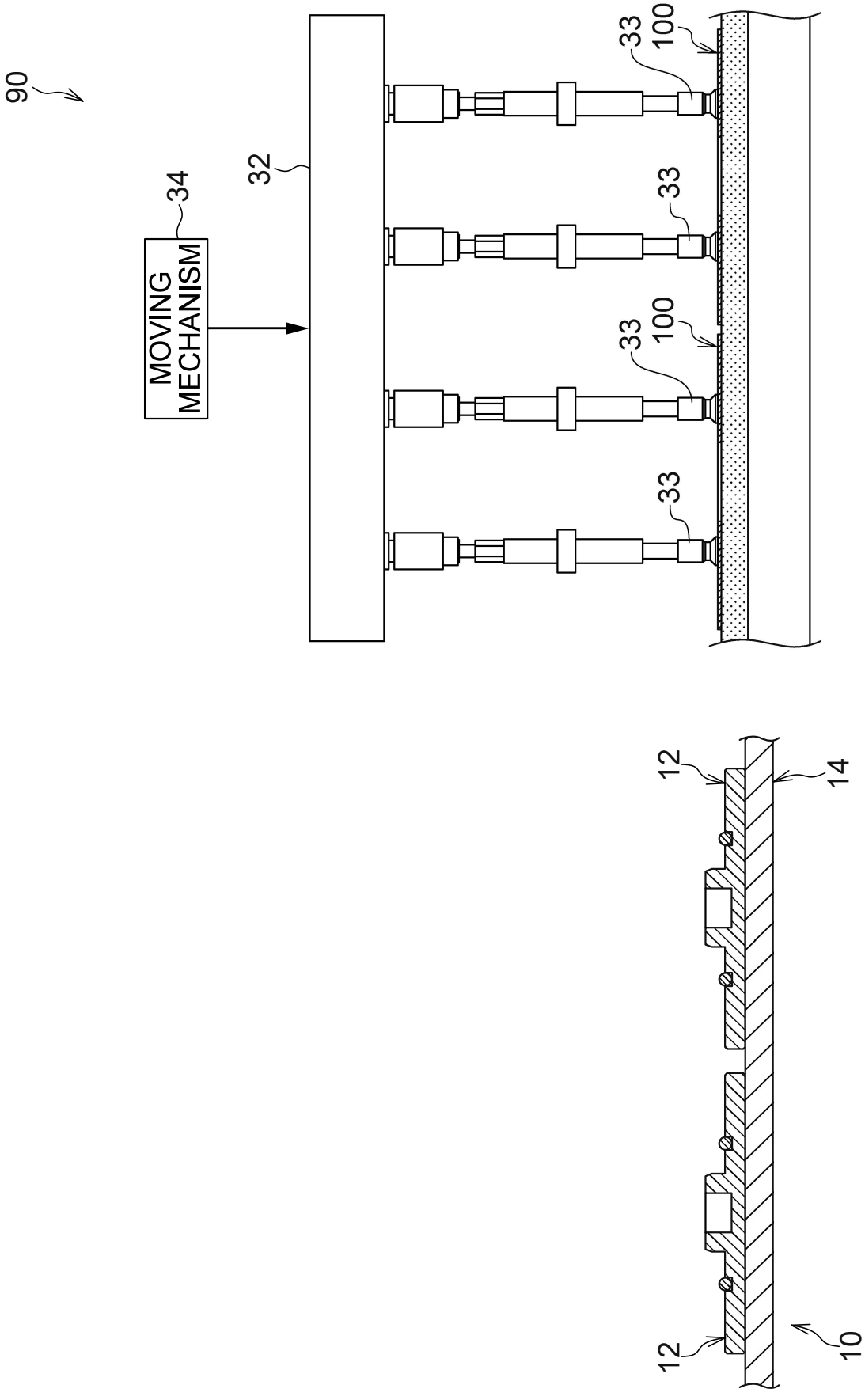

FIG.9

