(12) 特許協力条約に基づいて公開された国際出願

(19) 世界知的所有権機関
国際事務局

(43) 国際公開日
2012 年 2 月 2 日(02.02.2012)

PCT

(10) 国際公開番号
WO 2012/014281 A1

(51) 国際特許分類:
H02J 7/02 (2006.01) *H02J 7/00* (2006.01)

(21) 国際出願番号: PCT/JP2010/062606

(22) 国際出願日: 2010 年 7 月 27 日(27.07.2010)

(25) 国際出願の言語: 日本語

(26) 国際公開の言語: 日本語

(72) 発明者; および
(71) 出願人 : 竹田　晴見(TAKEDA Harumi) [JP/JP]; 〒5890023 大阪府大阪狭山市大野台６丁目２３番９号 Osaka (JP). 竹田　佳史(TAKEDA Yoshifumi) [JP/JP]; 〒5890023 大阪府大阪狭山市大野台６丁目２３番９号 Osaka (JP).

(74) 代理人: 杉本　勝徳(SUGIMOTO Katsunori); 〒5430051 大阪府大阪市天王寺区四天王寺１丁目１３番９号 Osaka (JP).

(81) 指定国 (表示のない限り、全ての種類の国内保護が可能): AE, AG, AL, AM, AO, AT, AU, AZ, BA, BB, BG, BH, BR, BW, BY, BZ, CA, CH, CL, CN, CO, CR, CU, CZ, DE, DK, DM, DO, DZ, EC, EE, EG, ES, FI, GB, GD, GE, GH, GM, GT, HN, HR, HU, ID, IL, IN, IS, JP, KE, KG, KM, KN, KP, KR, KZ, LA, LC, LK, LR, LS, LT, LU, LY, MA, MD, ME, MG, MK, MN, MW, MX, MY, MZ, NA, NG, NI, NO, NZ, OM, PE, PG, PH, PL, PT, RO, RS, RU, SC, SD, SE, SG, SK, SL, SM, ST, SV, SY, TH, TJ, TM, TN, TR, TT, TZ, UA, UG, US, UZ, VC, VN, ZA, ZM, ZW.

(84) 指定国 (表示のない限り、全ての種類の広域保護が可能): ARIPO (BW, GH, GM, KE, LR, LS, MW, MZ, NA, SD, SL, SZ, TZ, UG, ZM, ZW), ユーラシア (AM, AZ, BY, KG, KZ, MD, RU, TJ, TM), ヨーロッパ (AL, AT, BE, BG, CH, CY, CZ, DE, DK, EE, ES, FI, FR, GB, GR, HR, HU, IE, IS, IT, LT, LU, LV, MC, MK, MT, NL, NO, PL, PT, RO, SE, SI, SK, SM, TR), OAPI (BF, BJ, CF, CG, CI, CM, GA, GN, GQ, GW, ML, MR, NE, SN, TD, TG).

添付公開書類:
— 国際調査報告（条約第 21 条(3)）

(54) **Title**: CHARGING CONTROL METHOD AND DISCHARGING CONTROL METHOD FOR ELECTRICITY STORAGE DEVICE

(54) 発明の名称 : 蓄電装置の充電制御方法および放電制御方法

[図2]

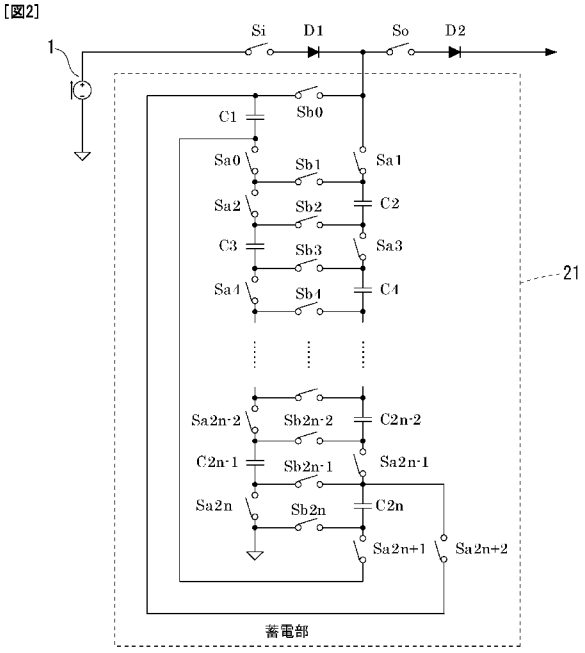

21 Electricity storage unit

(57) **Abstract**: Disclosed are a charging control method and a discharging control method for an electricity storage device, whereby variations in the inter-terminal voltage of capacitors can be suppressed without using a parallel monitor. A capacitor group is used as an electricity storage means in the charging control method. Said capacitor group includes 2n (n being an integer of 2 or more) electric double-layer capacitors with equal capacitance and numbered from 1 to 2n and is formed such that adjacent electric double-layer capacitors can be connected in series or parallel by a switch and the 2nth electric double-layer capacitor and the 1st electric double-layer capacitor can be connected in parallel by a switch. Adjacent capacitors among the 2n capacitors (Ci) that form an electricity storage unit (21) are sequentially switched from series connection to parallel connection, or the 2nth capacitor (C2n) and the 1st capacitor (C1) are switched to a parallel connection, thereby suppressing variations in the inter-terminal voltage of each capacitor.

(57) 要約:

[続葉有]

WO 2012/014281 A1