(12) INTERNATIONAL APPLICATION PUBLISHED UNDER THE PATENT COOPERATION TREATY (PCT)

(19) World Intellectual Property Organization
International Bureau

(43) International Publication Date
14 August 2025 (14.08.2025)

WIPO | PCT

(10) International Publication Number
WO 2025/170808 A1

(51) International Patent Classification:
F42B 5/285 (2006.01)

(21) International Application Number:
PCT/US2025/013605

(22) International Filing Date:
29 January 2025 (29.01.2025)

(25) Filing Language: English

(26) Publication Language: English

(30) Priority Data:
63/549,996 05 February 2024 (05.02.2024) US
63/551,324 08 February 2024 (08.02.2024) US

(71) Applicant: **SIG SAUER, INC.** [US/US]; 72 Pease Boulevard, Newington, New Hampshire 03801 (US).

(72) Inventors: **IMHOFF, Jason W.**; 284 River Ridge Point, Little Rock, Arizona 72227 (US). **BURCZYNSKI, Thomas J.**; 3190 County Road 7, Montour Falls, New York 14865 (US). **BROWN, Keith E.**; 34 Wildwood Drive, Cabot, Arizona 72023 (US). **GROVE, Robert M.**; 295 Stoney Point Church Road, Beebe, Arizona 72012 (US). **HALL, Johnathon M.**; 215 Byars Road, Beebe, Arizona 72012 (US). **BOTCHER, Tod R.**; 1537 Seaton Road, Ward, Arizona 72176 (US). **INGRAHAM, Daniel A.**; 197 Oak View Drive, Cabot, Arizona 72023 (US).

(74) Agent: **KRUTSINGER, Ross K.**; 50 Commercial Street, Suite 300, Manchester, New Hampshire 03101 (US).

(81) Designated States *(unless otherwise indicated, for every kind of national protection available)*: AE, AG, AL, AM, AO, AT, AU, AZ, BA, BB, BG, BH, BN, BR, BW, BY, BZ, CA, CH, CL, CN, CO, CR, CU, CV, CZ, DE, DJ, DK, DM, DO, DZ, EC, EE, EG, ES, FI, GB, GD, GE, GH, GM, GT, HN, HR, HU, ID, IL, IN, IQ, IR, IS, IT, JM, JO, JP, KE, KG, KH, KN, KP, KR, KW, KZ, LA, LC, LK, LR, LS, LU, LY, MA, MD, MG, MK, MN, MU, MW, MX, MY, MZ, NA, NG, NI, NO, NZ, OM, PA, PE, PG, PH, PL, PT, QA, RO, RS, RU, RW, SA, SC, SD, SE, SG, SK, SL, ST, SV, SY, TH, TJ, TM, TN, TR, TT, TZ, UA, UG, US, UY, UZ, VC, VN, WS, ZA, ZM, ZW.

(84) Designated States *(unless otherwise indicated, for every kind of regional protection available)*: ARIPO (BW, CV, GH, GM, KE, LR, LS, MW, MZ, NA, RW, SC, SD, SL, ST, SZ, TZ, UG, ZM, ZW), Eurasian (AM, AZ, BY, KG, KZ, RU, TJ, TM), European (AL, AT, BE, BG, CH, CY, CZ, DE, DK, EE, ES, FI, FR, GB, GR, HR, HU, IE, IS, IT, LT, LU, LV, MC, ME, MK, MT, NL, NO, PL, PT, RO, RS, SE, SI, SK, SM, TR), OAPI (BF, BJ, CF, CG, CI, CM, GA, GN, GQ, GW, KM, ML, MR, NE, SN, TD, TG).

Published:
— *with international search report (Art. 21(3))*

(54) Title: MULTI-PIECE CARTRIDGE CASING AND METHOD OF MAKING

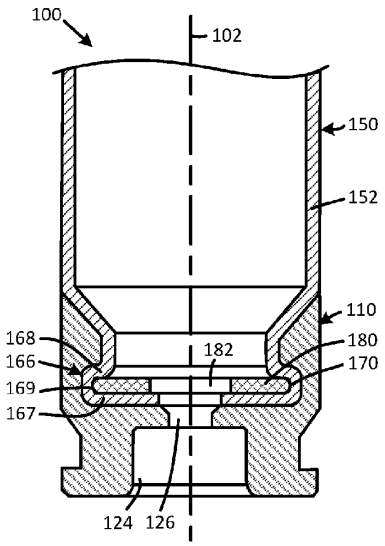

FIG. 4A

(57) Abstract: A multi-piece ammunition cartridge casing includes a casing base extending along a central axis and defining an opening extending axially into the casing base from the distal base end. The inner casing surface defines a circumferential groove with a groove radius greater than a radius of an adjacent portion of the opening. The cartridge casing also includes a casing body with a proximal end portion disposed in the opening of the casing base. The casing body is secured to the casing base by way of a flange protruding radially outward in mating contact with the circumferential groove. A flash opening extends from the primer pocket to the inner face, where at least part of the flash opening expands in size moving toward the inner face. An ammunition cartridge incorporating the multi-piece cartridge casing and methods of making are also disclosed.

WO 2025/170808 A1