(12) INTERNATIONAL APPLICATION PUBLISHED UNDER THE PATENT COOPERATION TREATY (PCT)

(19) World Intellectual Property Organization
International Bureau

(43) International Publication Date
25 September 2003 (25.09.2003)

PCT

(10) International Publication Number
WO 03/078897 A1

(51) International Patent Classification[7]: F23G 5/50, 5/44

(21) International Application Number: PCT/IL02/00213

(22) International Filing Date: 18 March 2002 (18.03.2002)

(25) Filing Language: English

(26) Publication Language: English

(71) Applicant *(for all designated States except US)*: **E.E.R. ENVIRONMENTAL ENERGY RESOURCES (ISRAEL) LTD.** [IL/IL]; 12 Hachilazon Street, 52522 Ramat-Gan (IL).

(72) Inventors; and

(75) Inventors/Applicants *(for US only)*: **GNEDENKO, Valeri, G.** [RU/RU]; 19 Berzarina Street, Bldg. 1, Apt. 201, Moscow, 123585 (RU). **SOURIS, Alexandre** [RU/RU]; 25 Cheliabinskaya Street, Bldg. 1, Apt. 84, Moscow, 105568 (RU). **PEGAZ, David** [IL/IL]; 1 E. Mohl Street, Apt. 14, 42540 Netanya (IL).

(74) Agents: **LUZZATTO, Kfir** et al.; Luzzatto & Luzzatto, P.O. Box 5352, 84152 Beersheva (IL).

(81) Designated States *(national)*: AE, AG, AL, AM, AT, AU, AZ, BA, BB, BG, BR, BY, BZ, CA, CH, CN, CO, CR, CU, CZ, DE, DK, DM, DZ, EC, EE, ES, FI, GB, GD, GE, GH, GM, HR, HU, ID, IL, IN, IS, JP, KE, KG, KP, KR, KZ, LC, LK, LR, LS, LT, LU, LV, MA, MD, MG, MK, MN, MW, MX, MZ, NO, NZ, OM, PH, PL, PT, RO, RU, SD, SE, SG, SI, SK, SL, TJ, TM, TN, TR, TT, TZ, UA, UG, US, UZ, VN, YU, ZA, ZM, ZW.

(84) Designated States *(regional)*: ARIPO patent (GH, GM, KE, LS, MW, MZ, SD, SL, SZ, TZ, UG, ZM, ZW), Eurasian patent (AM, AZ, BY, KG, KZ, MD, RU, TJ, TM), European patent (AT, BE, CH, CY, DE, DK, ES, FI, FR,

[Continued on next page]

(54) Title: CONTROL SYSTEM FOR A WASTE PROCESSING APPARATUS

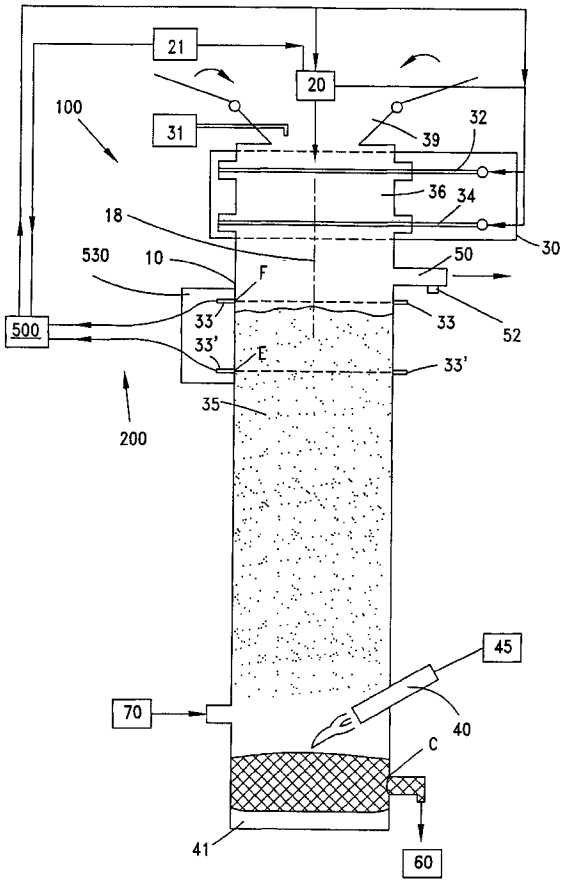

(57) Abstract: A control system for a waste processing apparatus controls entry of a predetermined quantity of waste into the processing chamber via an air lock whenever the level of waste in the chamber has fallen sufficiently to accommodate the new waste, and this is detected by a suitable detector. A second detector may be located upstream of the second detector to enable the flow rate of waste through the processing chamber to be calculated.

WO 03/078897 A1

GB, GR, IE, IT, LU, MC, NL, PT, SE, TR), OAPI patent (BF, BJ, CF, CG, CI, CM, GA, GN, GQ, GW, ML, MR, NE, SN, TD, TG).

For two-letter codes and other abbreviations, refer to the "Guidance Notes on Codes and Abbreviations" appearing at the beginning of each regular issue of the PCT Gazette.

Published:
— *with international search report*