FIG. 1

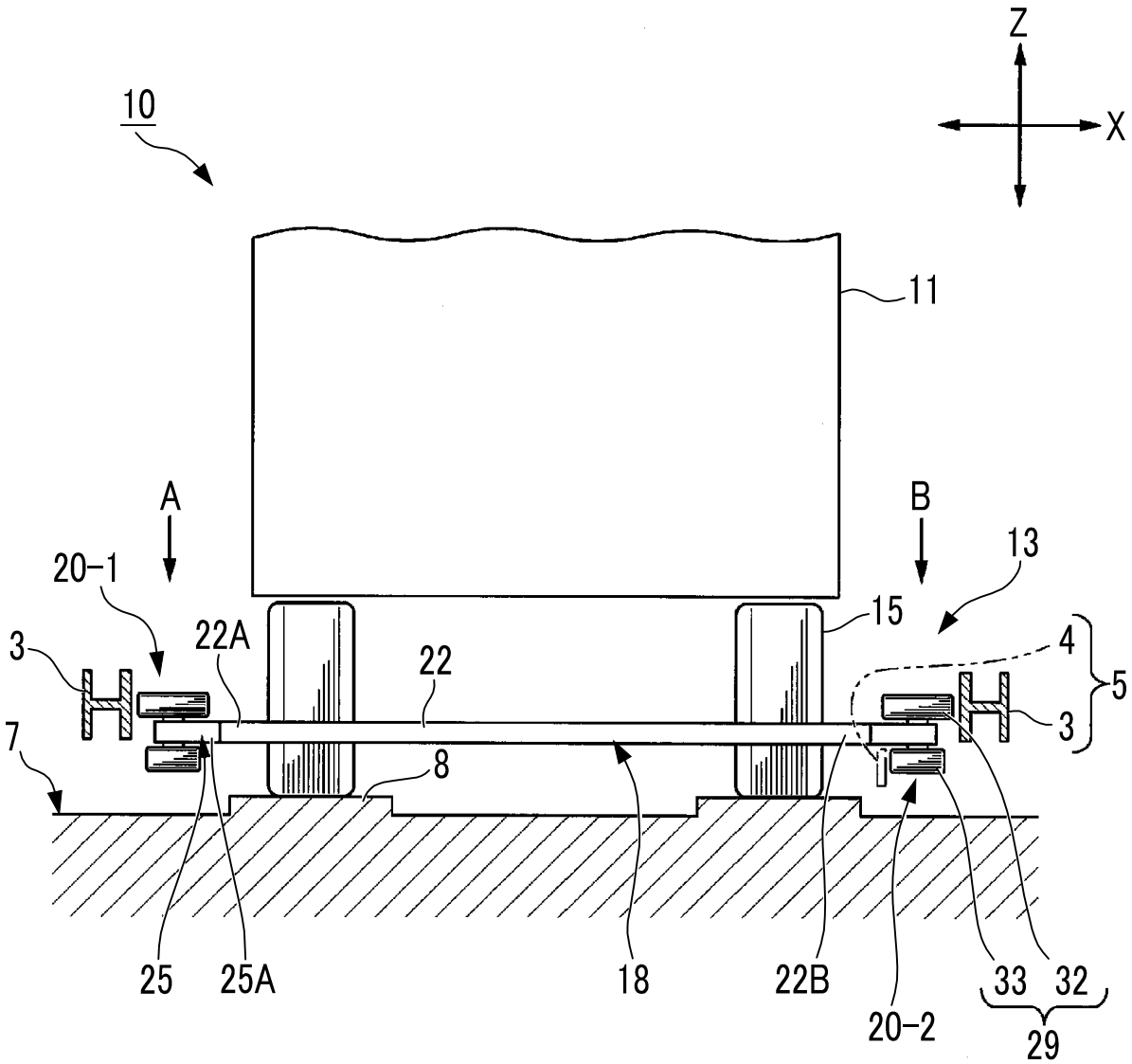

FIG. 2

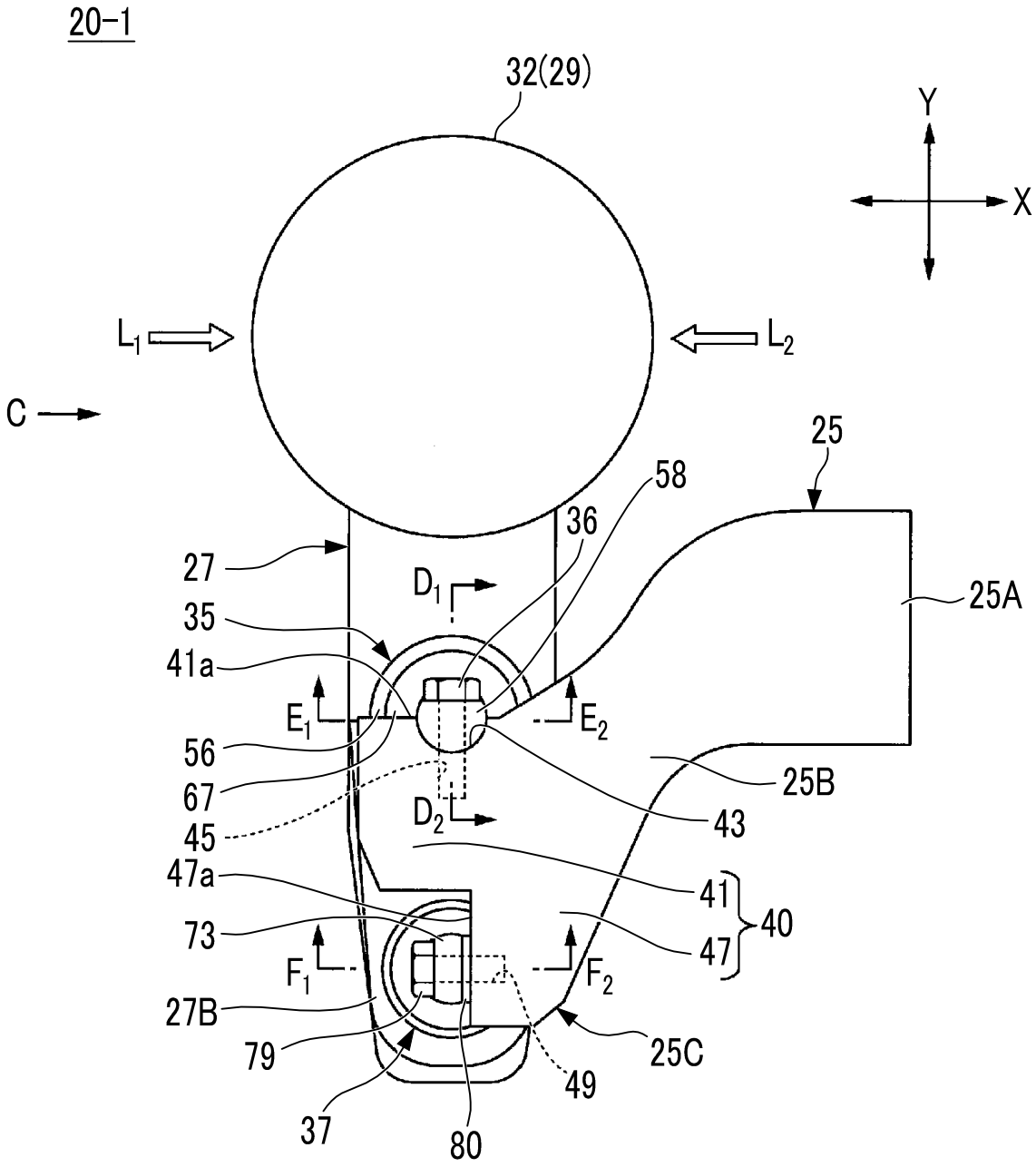
20-1
32(29)
Y
X
L_1
L_2
C
25
58
36
27
D_1
25A
35
41a
E_1
E_2
56
67
45
D_2
43
25B
47a
41
40
73
47
F_1
F_2
27B
79
25C
49
37
80

FIG. 3

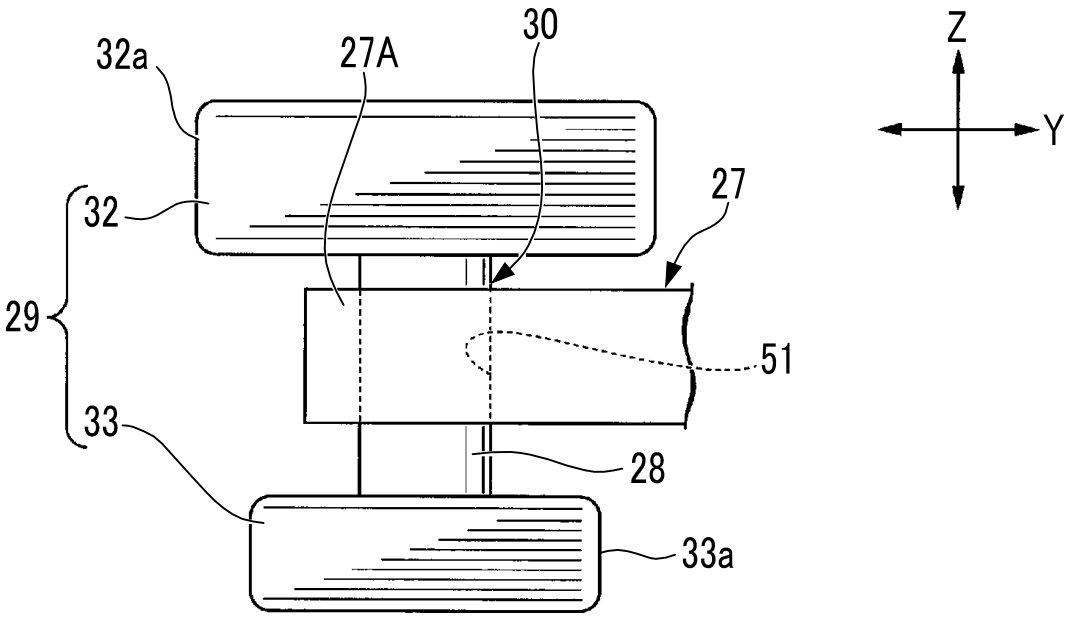
32a
27A
30
Z
Y
27
32
29
51
33
28
33a

FIG. 4

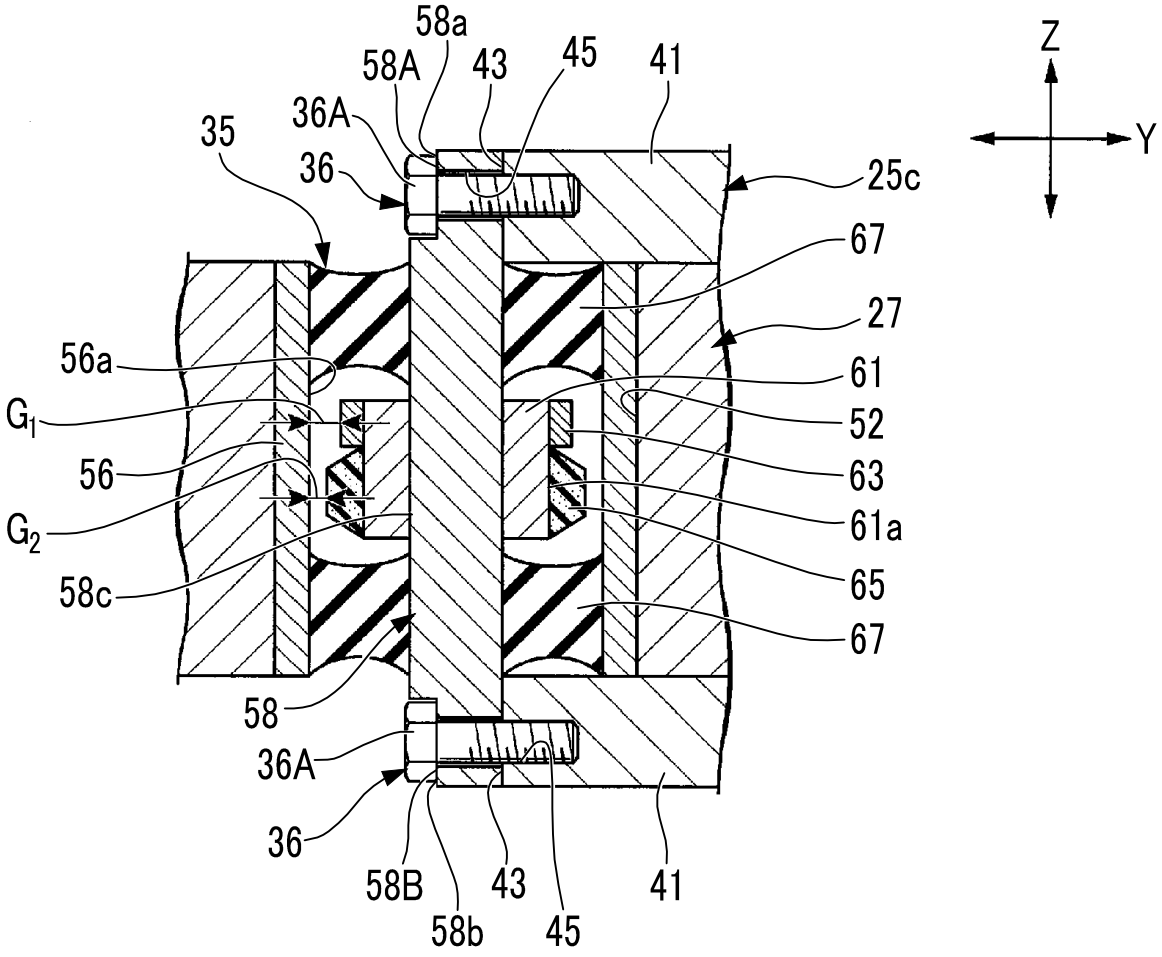
58a
58A
43
45
41
36A
35
36
25c
Z
Y
67
27
56a
61
G1
52
56
63
61a
G2
65
58c
67
58
36A
36
58B
43
41
58b
45

FIG. 5

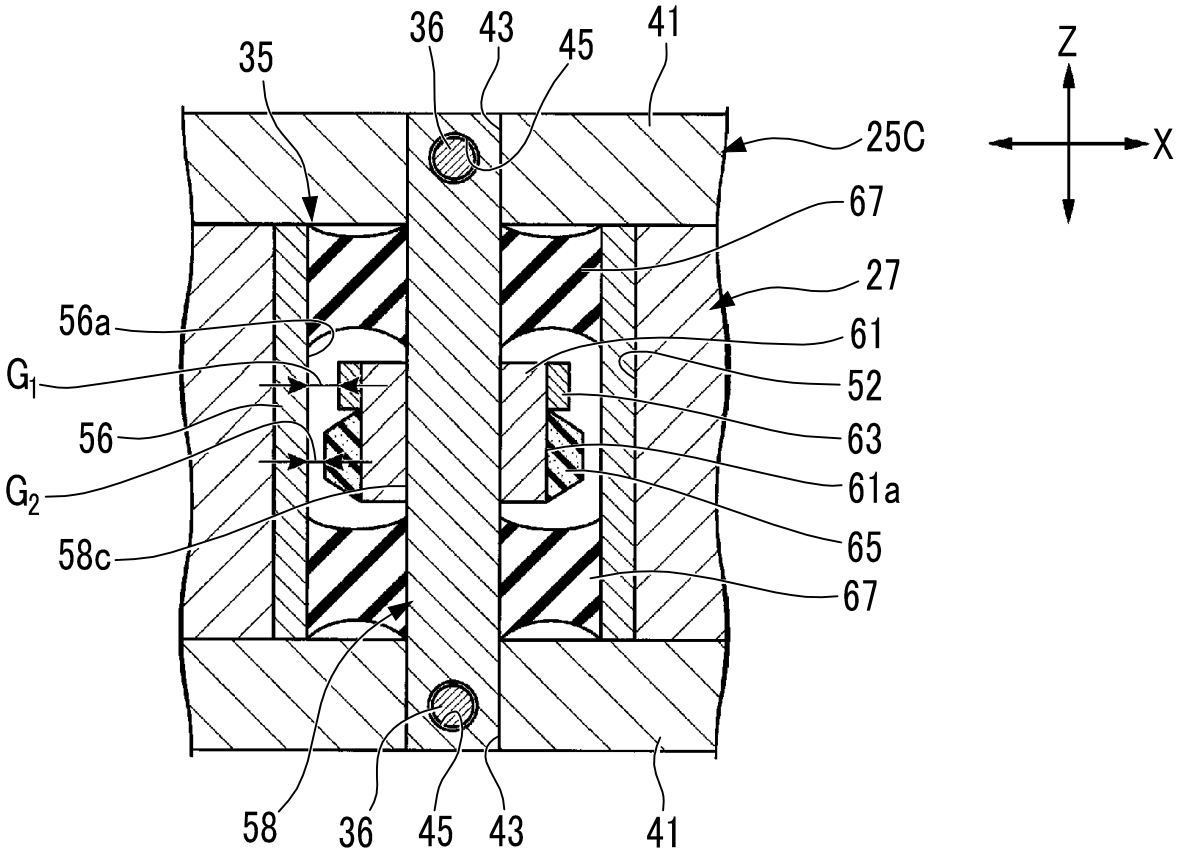
36
43
45
41
35
25C
Z
X
67
27
56a
61
G1
52
56
63
G2
61a
58c
65
67
58
36
45
43
41

FIG. 6

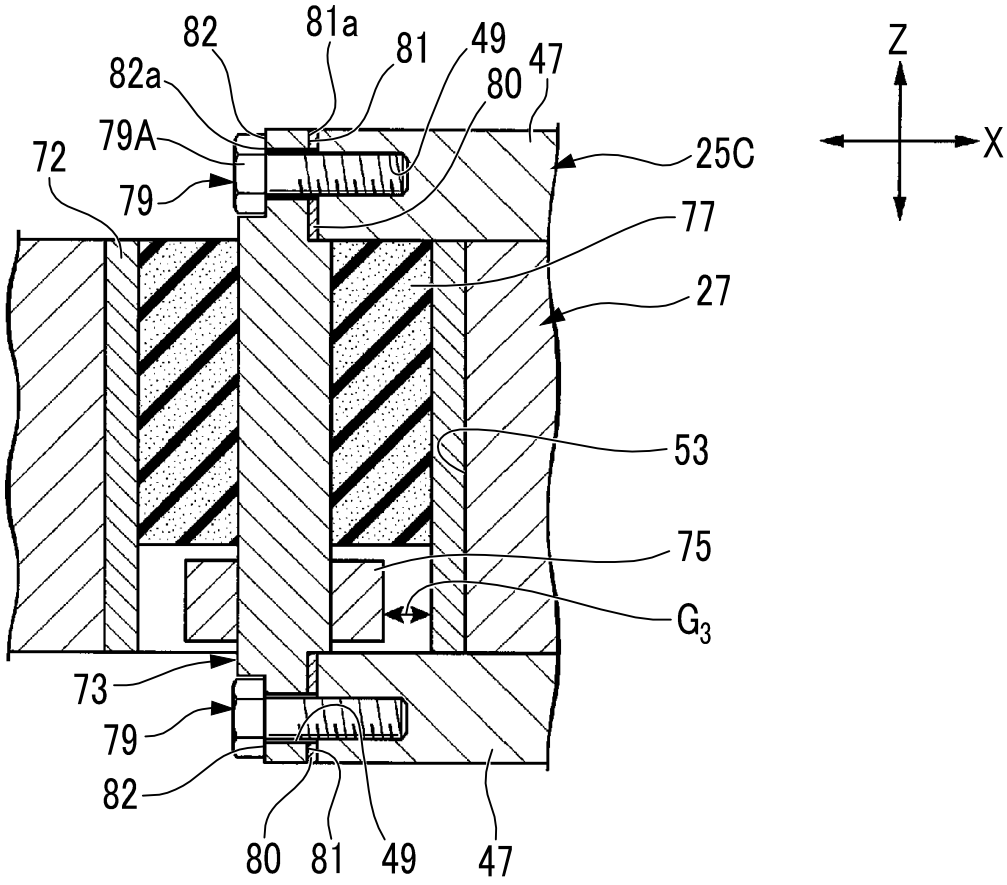
82
81a
81
49
47
82a
80
79A
25C
72
79
77
27
53
75
G_3
73
79
82
80
81
49
47
Z
X

FIG. 7

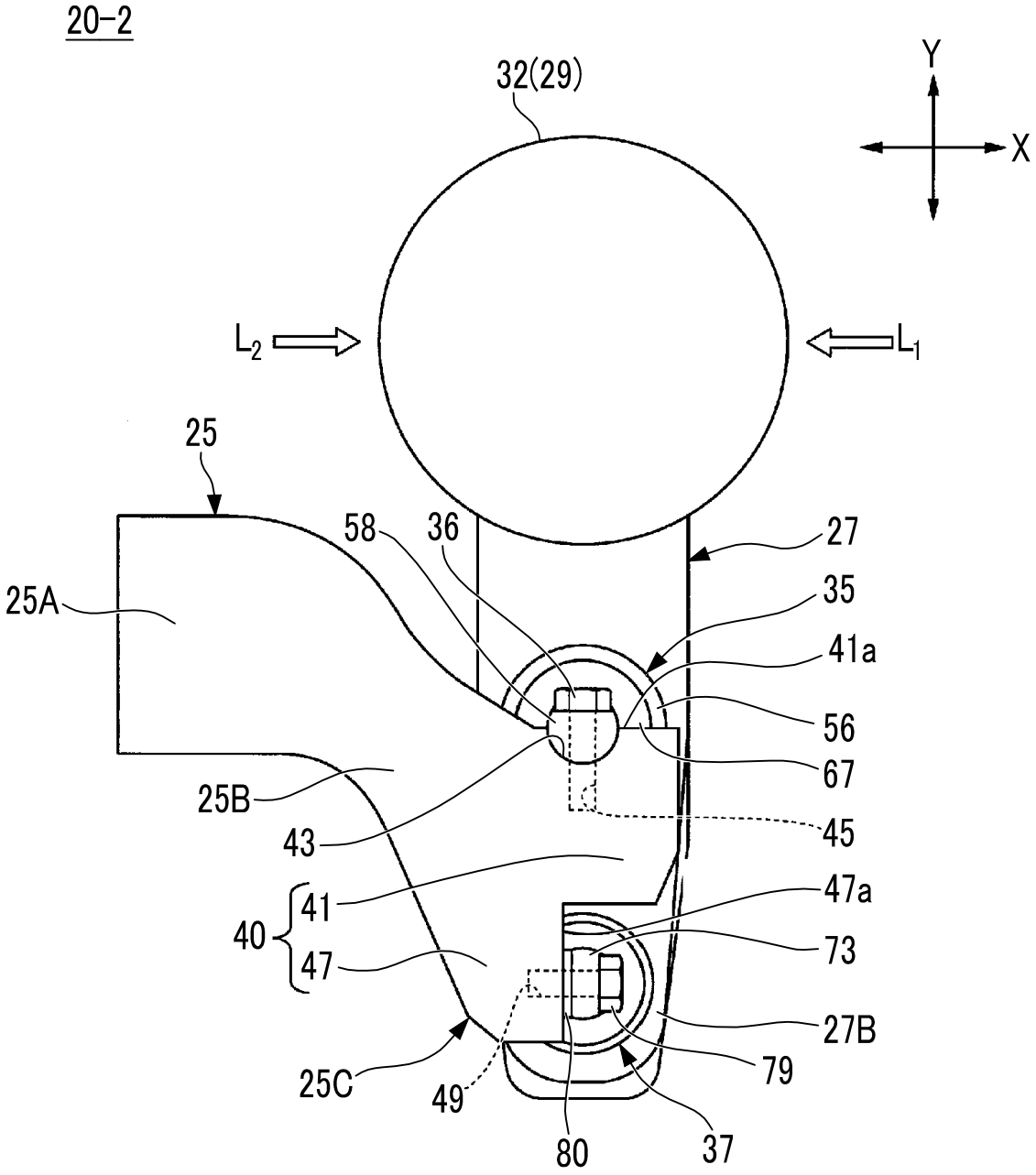
20-2
32(29)
Y
X
L_2
L_1
25
58
36
27
25A
35
41a
56
67
25B
43
45
41
40
47
47a
73
27B
79
25C
49
80
37

FIG. 8

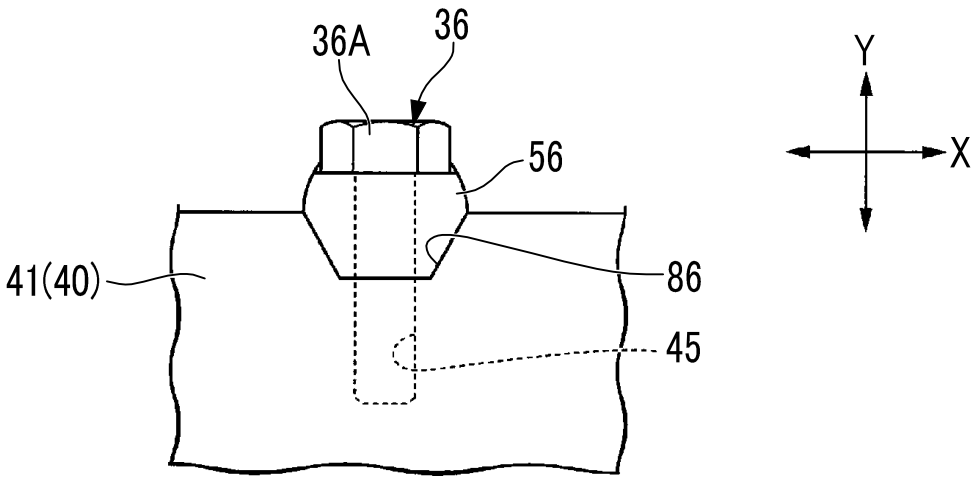
36A
36
56
41(40)
86
45
Y
X

FIG. 9

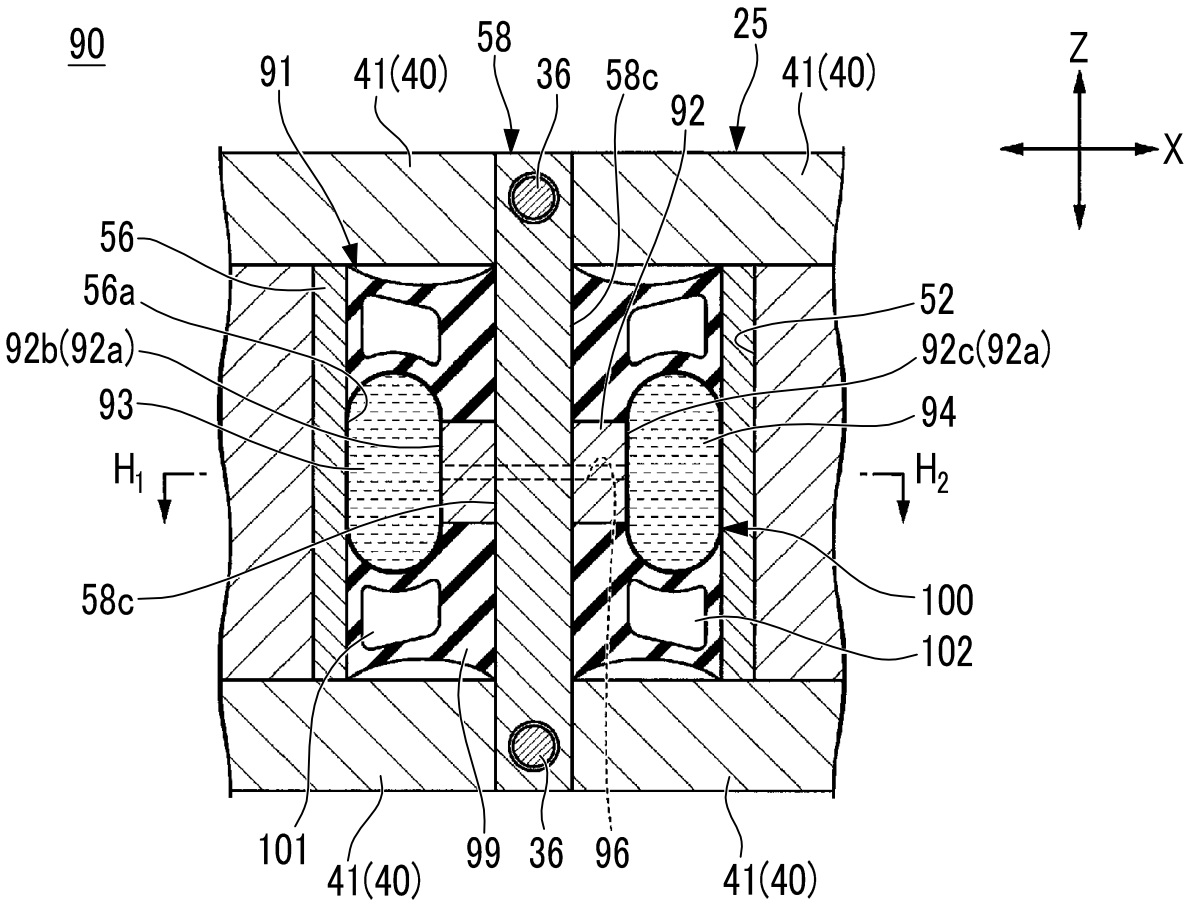
90
91
41(40)
58
36
58c
92
25
41(40)
Z
X
56
56a
92b(92a)
93
H1
58c
52
92c(92a)
94
H2
100
102
101
41(40)
99
36
96
41(40)

FIG. 10

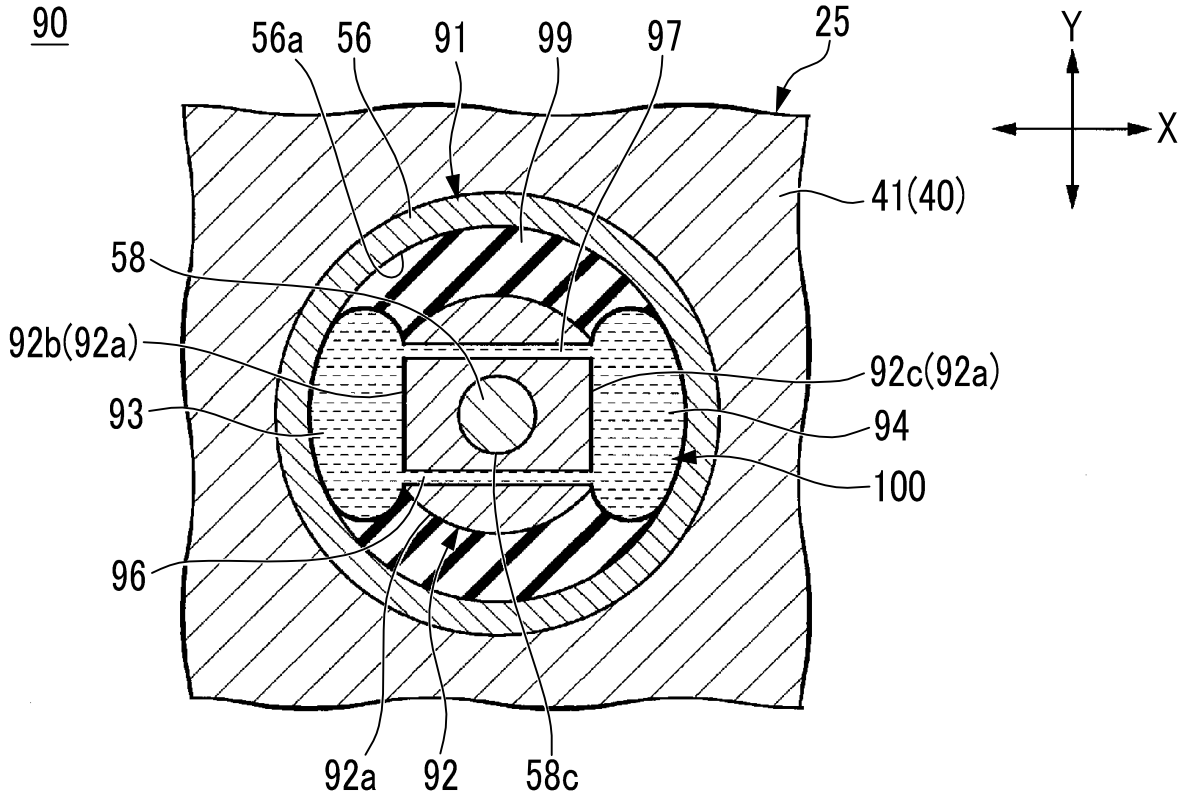
90
56a
56
91
99
97
25
Y
X
41(40)
58
92b(92a)
92c(92a)
93
94
100
96
92a
92
58c

FIG. 11

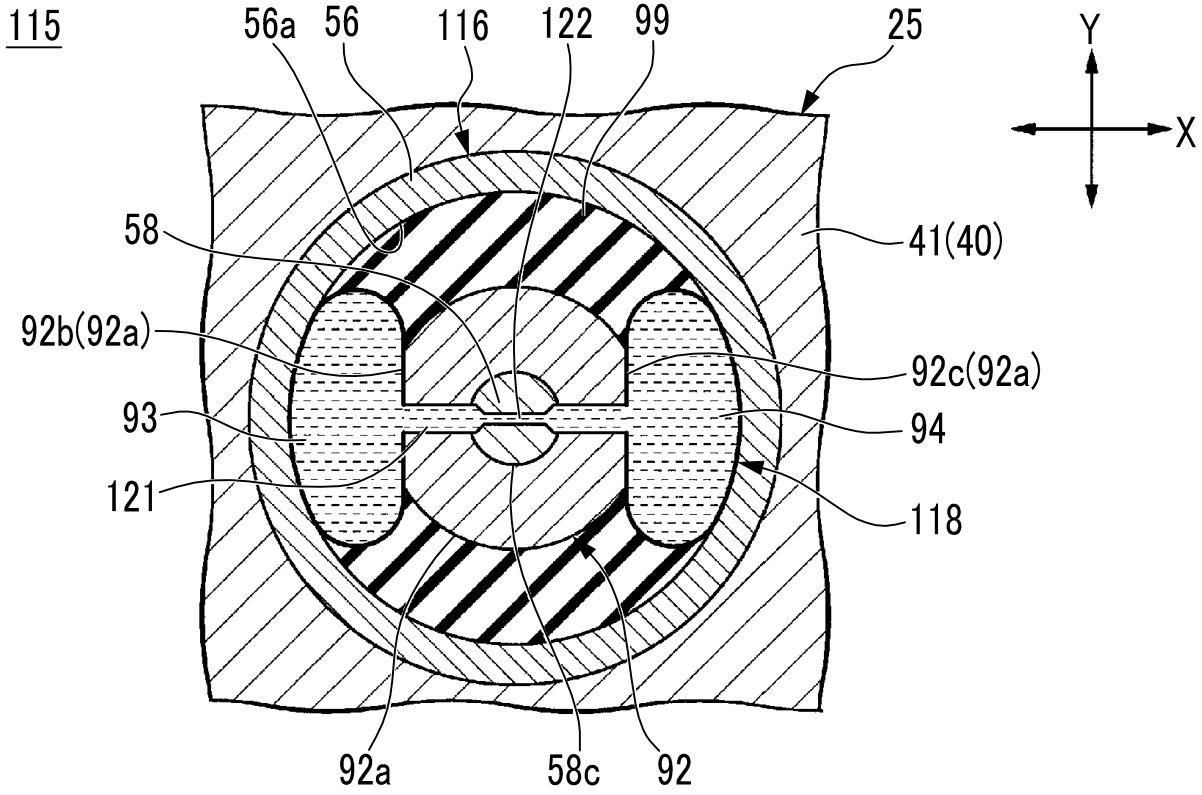
115
56a
56
116
122
99
25
Y
X
41(40)
58
92b(92a)
92c(92a)
93
94
121
118
92a
58c
92

FIG. 12

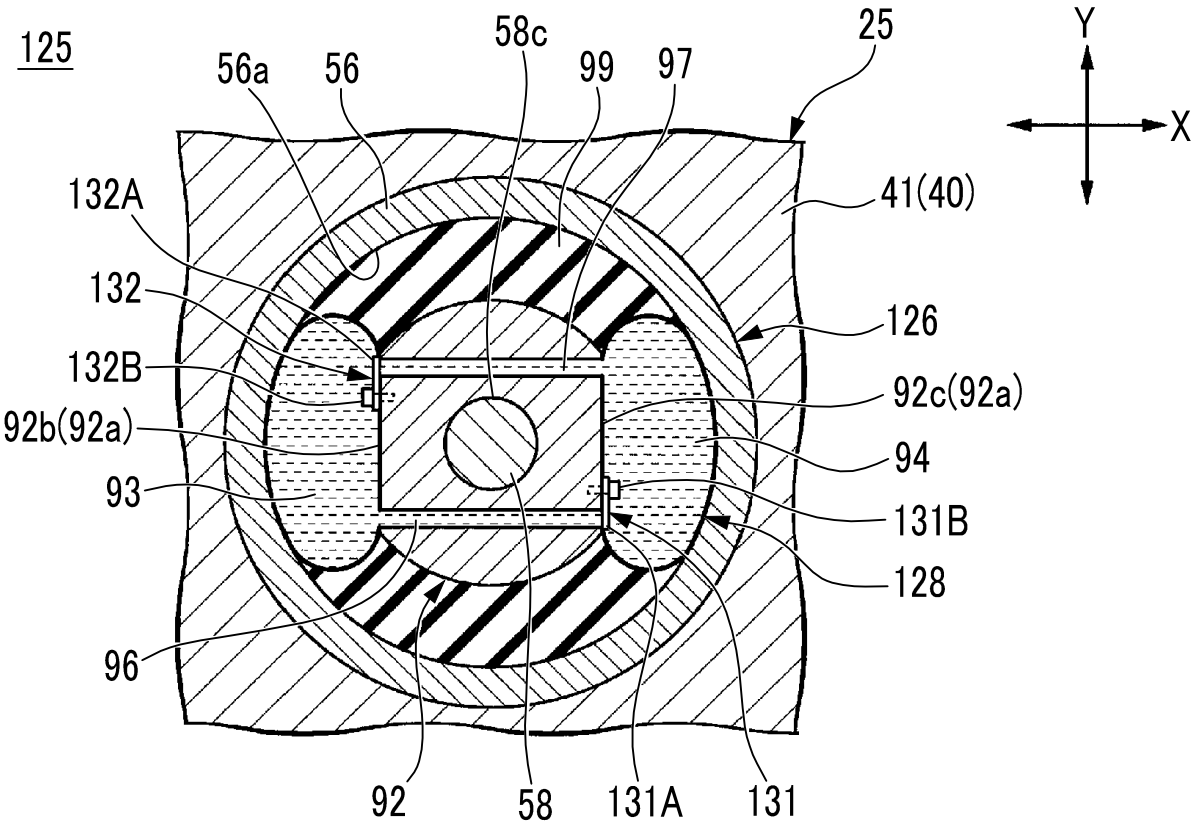
125
56a
56
58c
99
97
25
Y
X
132A
41(40)
132
126
132B
92c(92a)
92b(92a)
94
93
131B
128
96
92
58
131A
131

FIG. 13

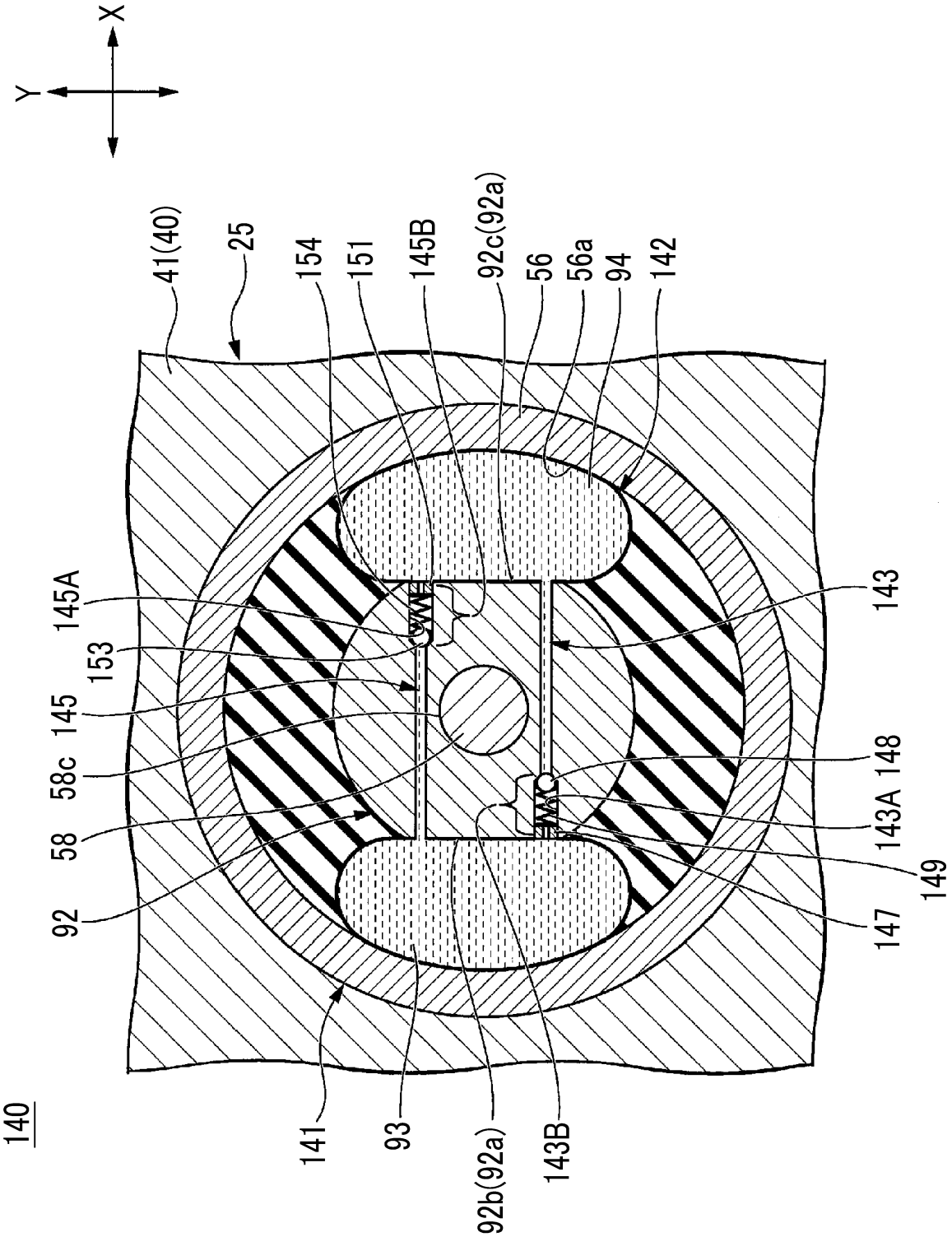
X
Y
41(40)
25
154
151
145B
92c(92a)
56
56a
94
142
145A
153
145
58c
58
92
143
148
143A
149
147
141
93
92b(92a)
143B
140

FIG. 14

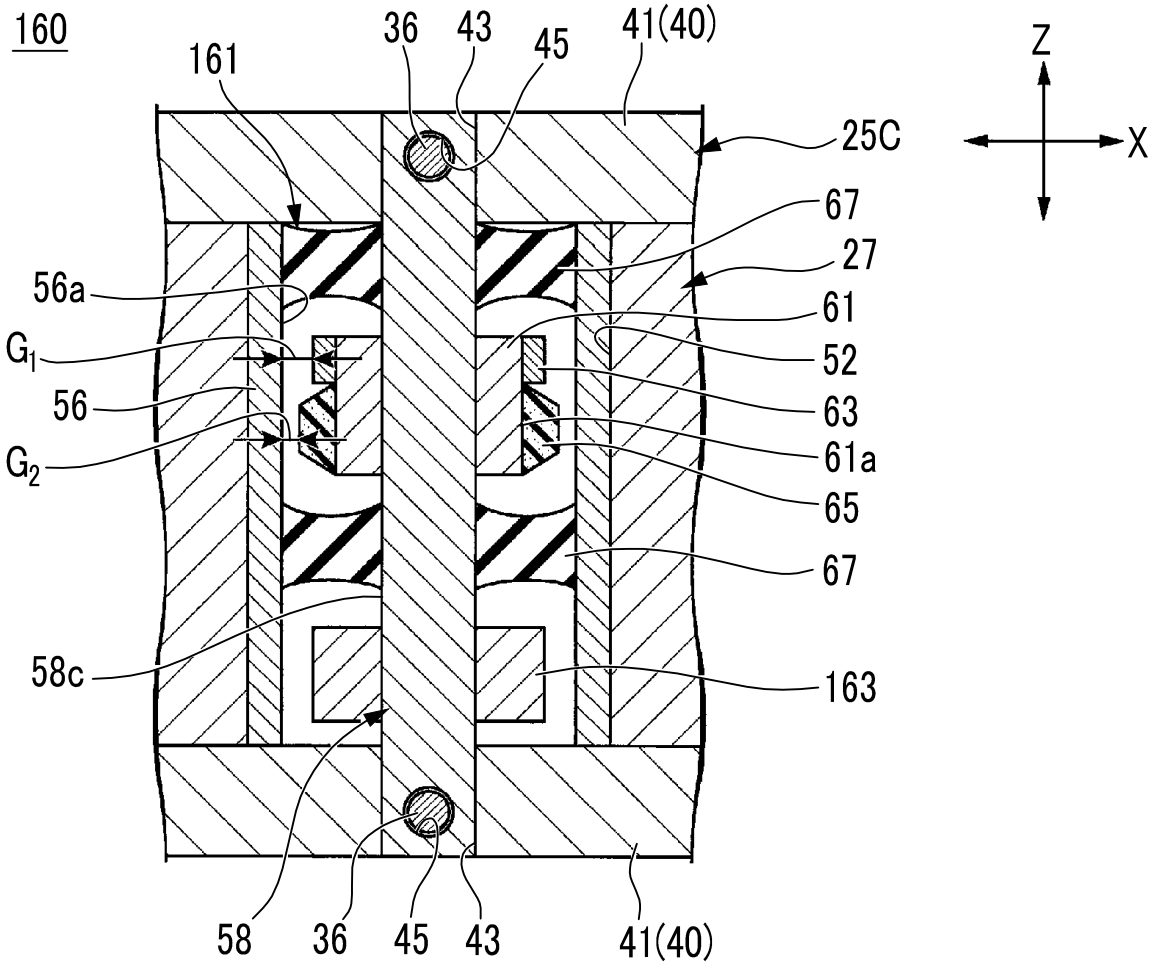
160
161
36
43
45
41(40)
25C
Z
X
67
27
56a
61
G_1
52
56
63
G_2
61a
65
67
58c
163
58
36
45
43
41(40)

FIG. 15

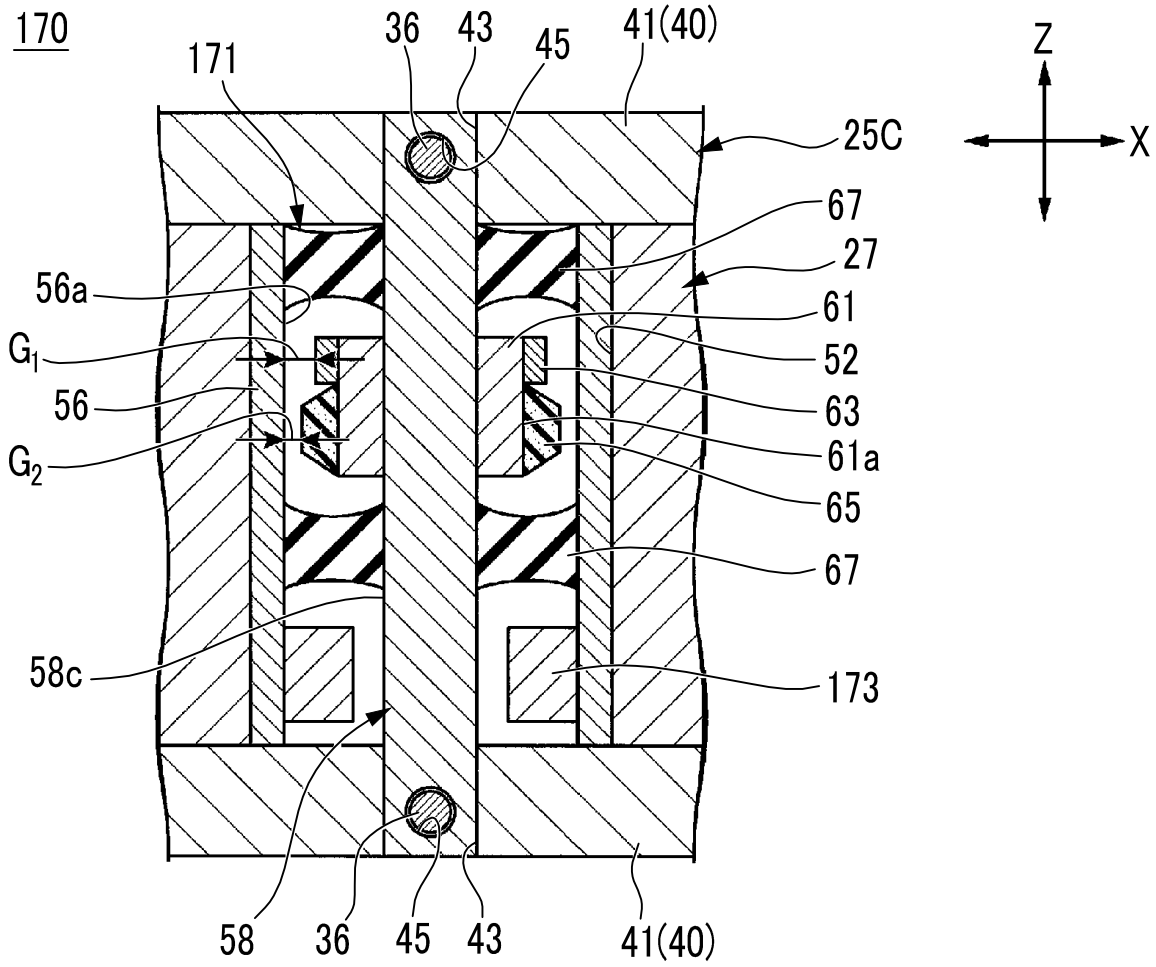
170
171
36
43
45
41(40)
25C
Z
X
67
27
56a
61
G_1
52
56
63
G_2
61a
65
67
58c
173
58
36
45
43
41(40)

FIG. 16

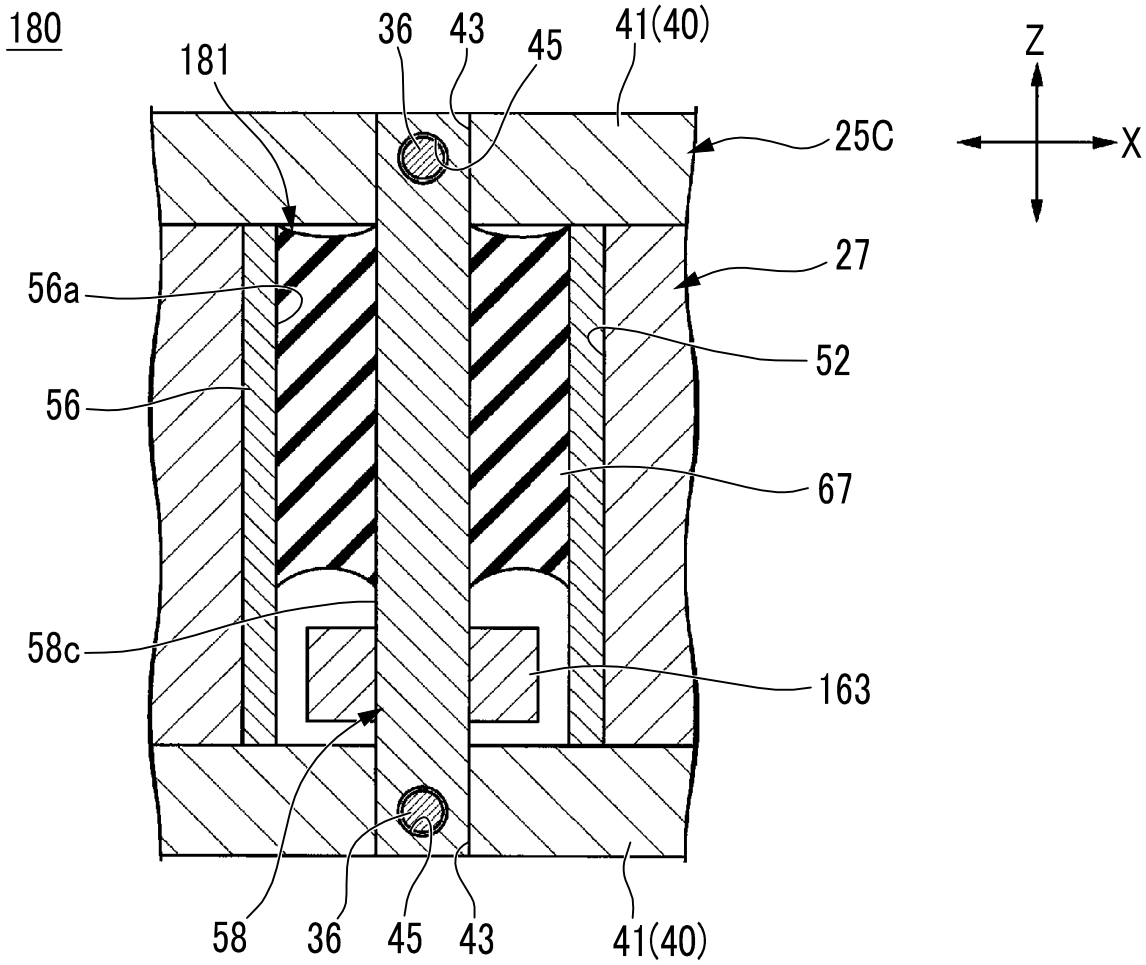
180
181
36
43
45
41(40)
25C
Z
X
27
56a
52
56
67
58c
163
58
36
45
43
41(40)

FIG. 17

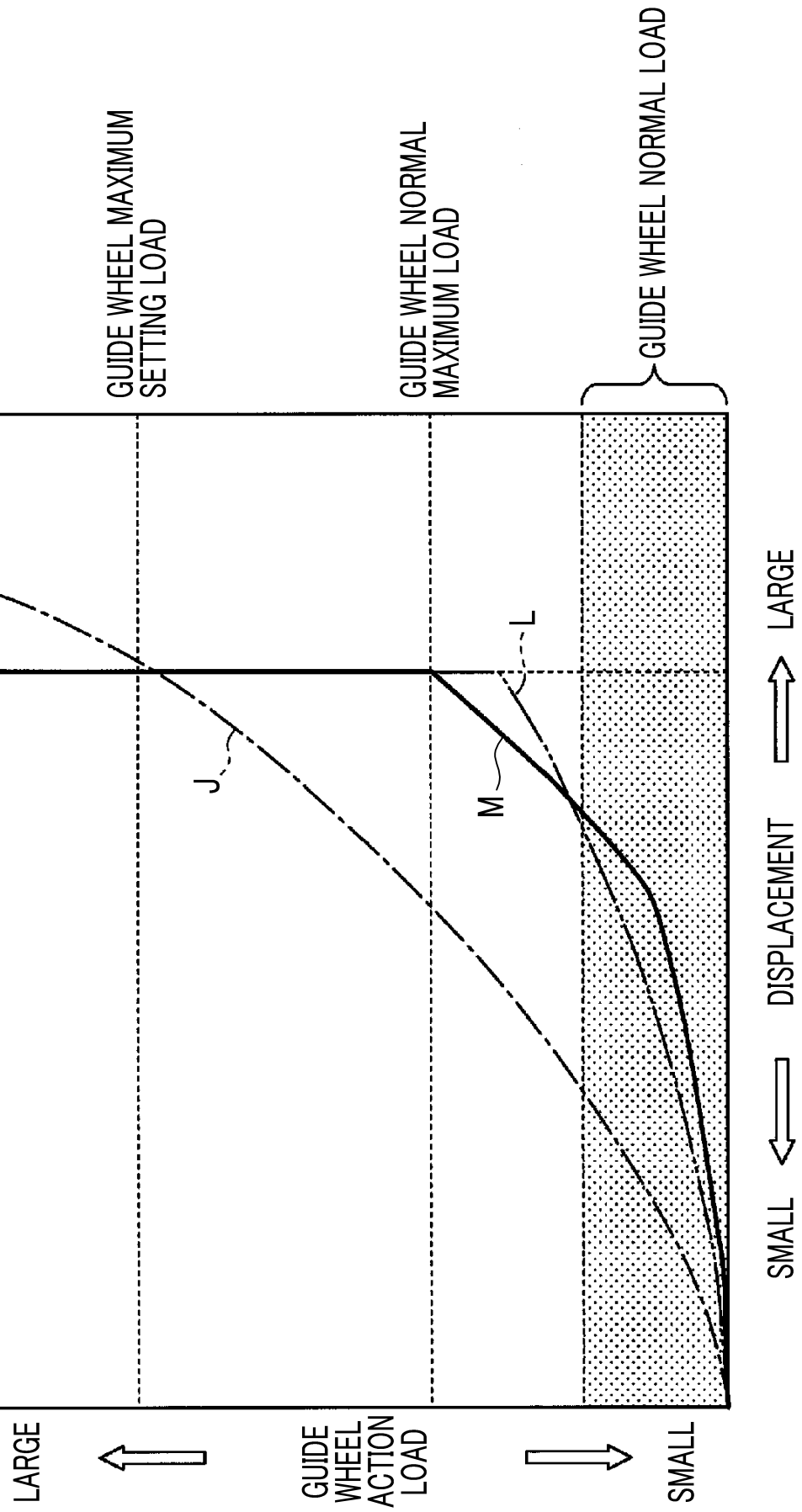
DISPLACEMENT TOLERANCE
GUIDE WHEEL MAXIMUM SETTING LOAD
GUIDE WHEEL NORMAL MAXIMUM LOAD
GUIDE WHEEL NORMAL LOAD
J
M
L
LARGE
GUIDE WHEEL ACTION LOAD
SMALL
SMALL
DISPLACEMENT
LARGE

FIG. 18

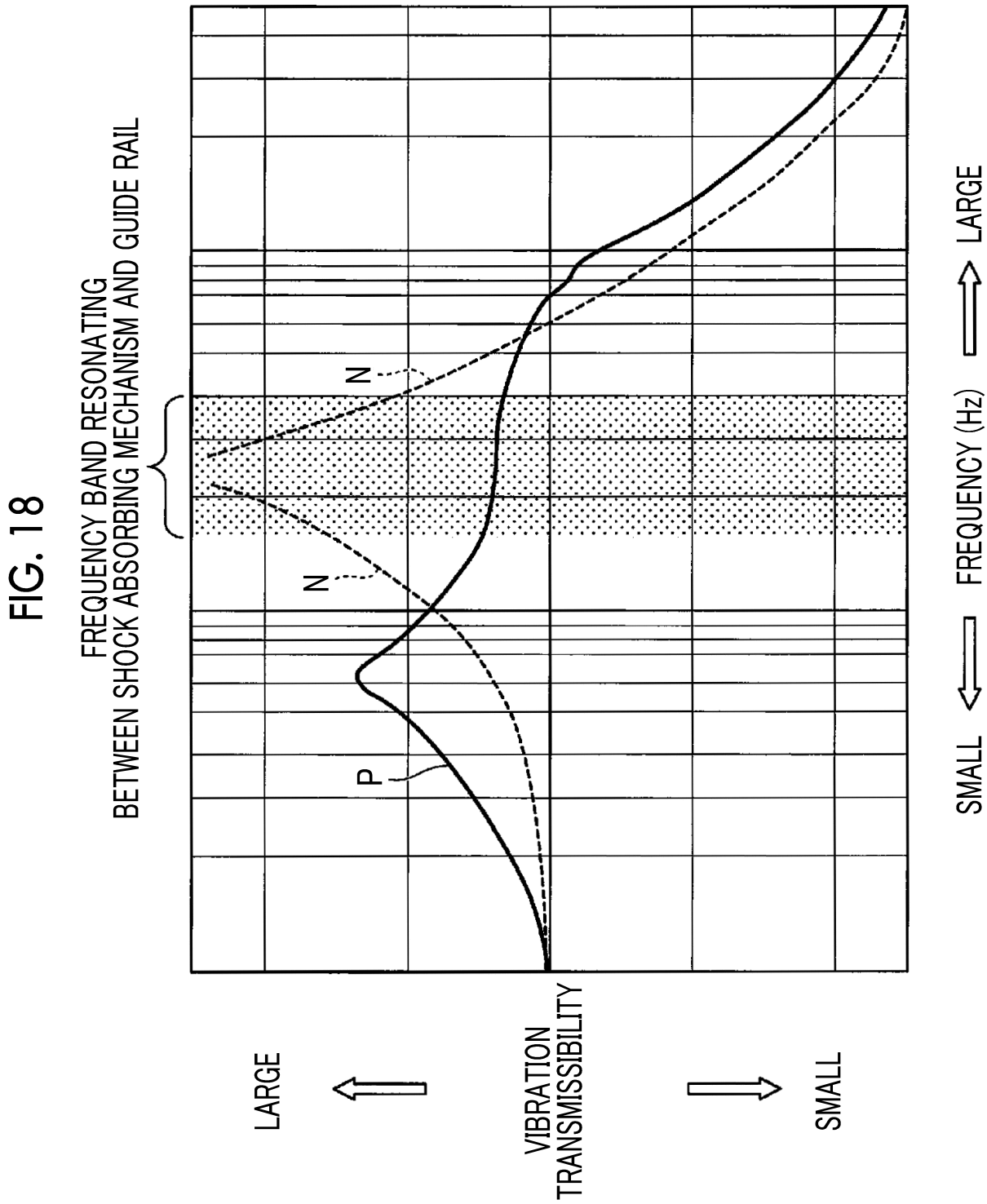
FREQUENCY BAND RESONATING
BETWEEN SHOCK ABSORBING MECHANISM AND GUIDE RAIL
N
N
P
LARGE
VIBRATION TRANSMISSIBILITY
SMALL
SMALL
FREQUENCY (Hz)
LARGE