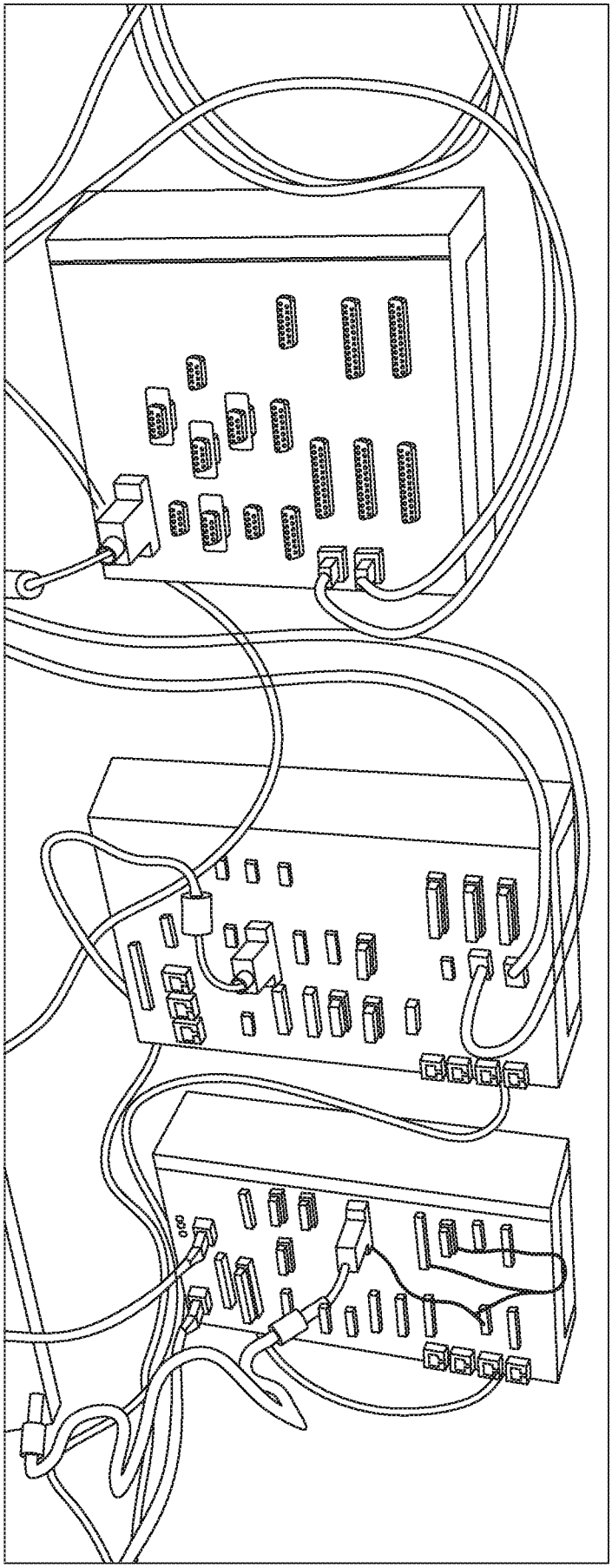

FIG. 1A

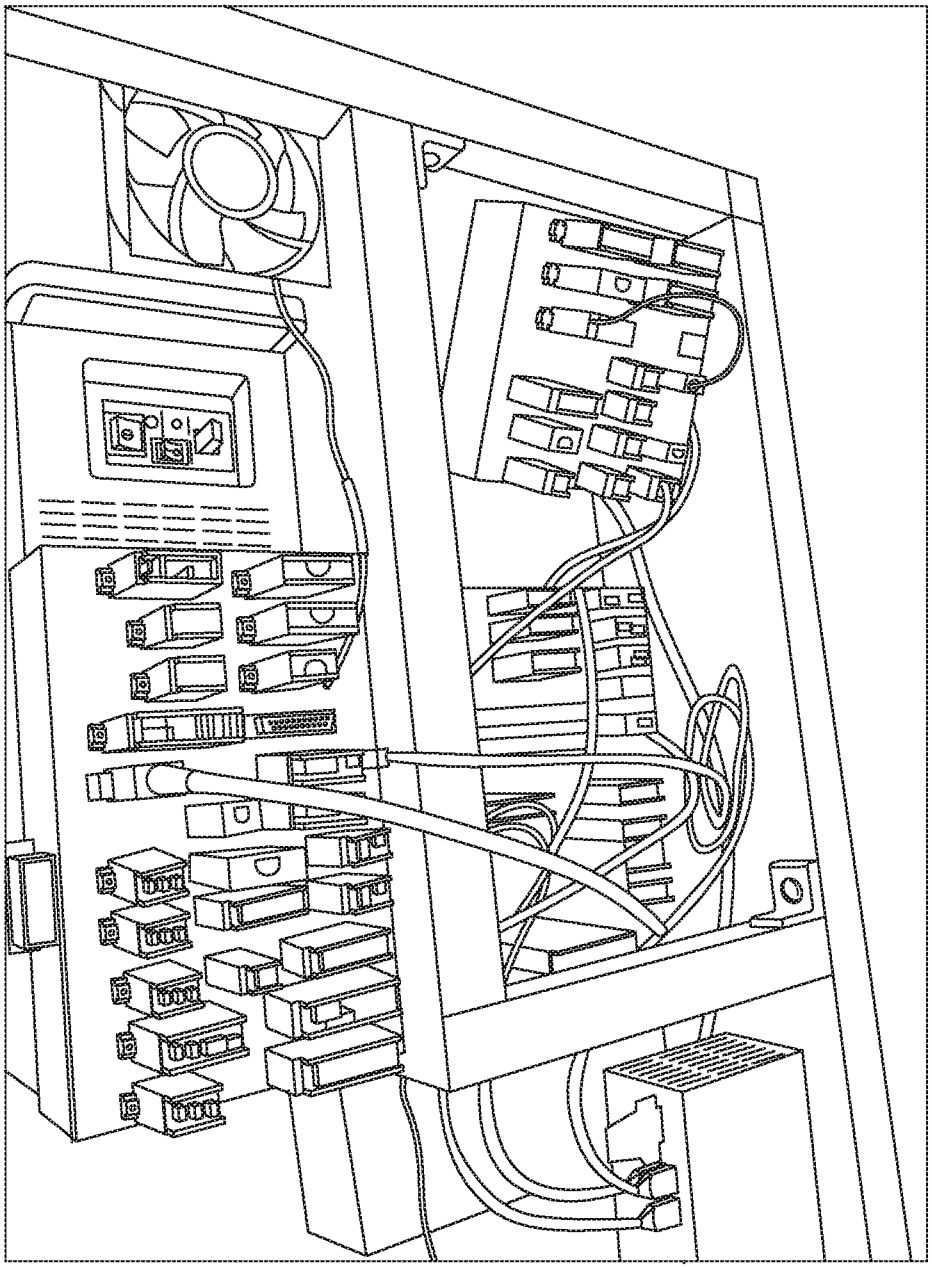

150

FIG. 1B

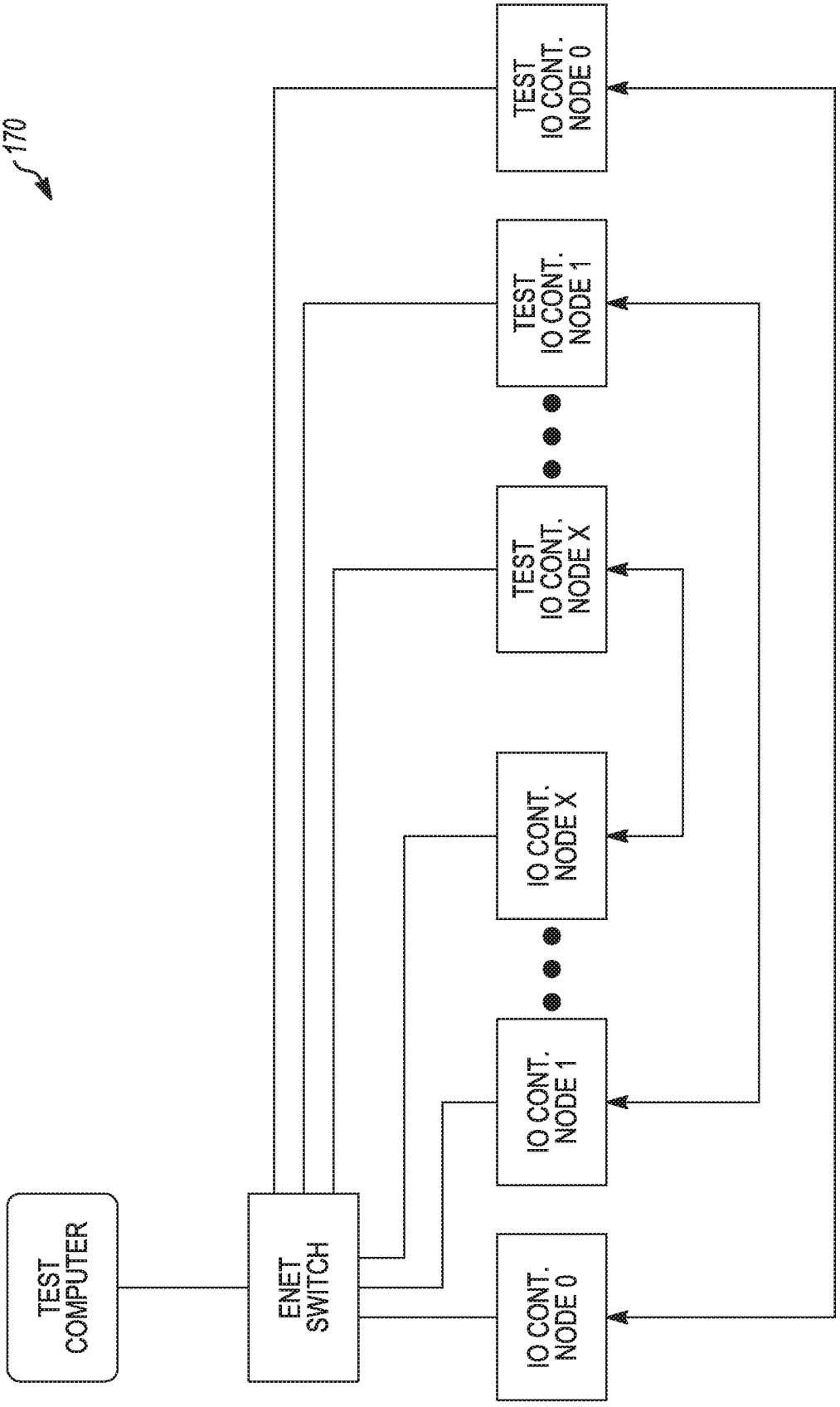
170
TEST COMPUTER
ENET SWITCH
IO CONT. NODE 0
IO CONT. NODE 1
IO CONT. NODE X
TEST IO CONT. NODE X
TEST IO CONT. NODE 1
TEST IO CONT. NODE 0

FIG. 1C

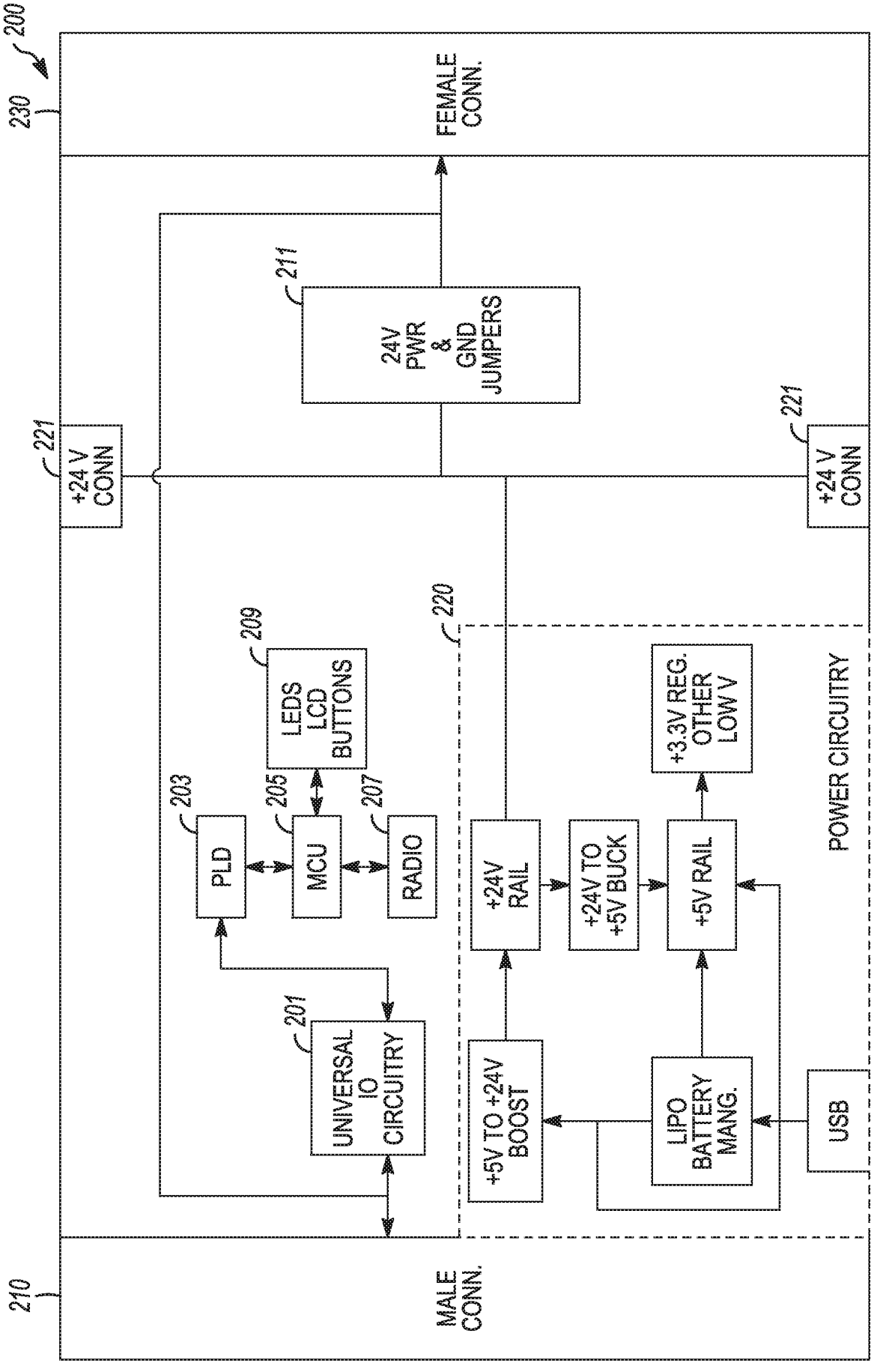
200
230
FEMALE CONN.
211
24V PWR & GND JUMPERS
221
+24 V CONN
221
+24 V CONN
209
LEDS LCD BUTTONS
220
203
205
207
PLD
MCU
RADIO
+24V RAIL
+24V TO +5V BUCK
+5V RAIL
+3.3V REG. OTHER LOW V
POWER CIRCUITRY
201
UNIVERSAL IO CIRCUITRY
+5V TO +24V BOOST
LIPO BATTERY MANG.
USB
210
MALE CONN.

FIG. 2

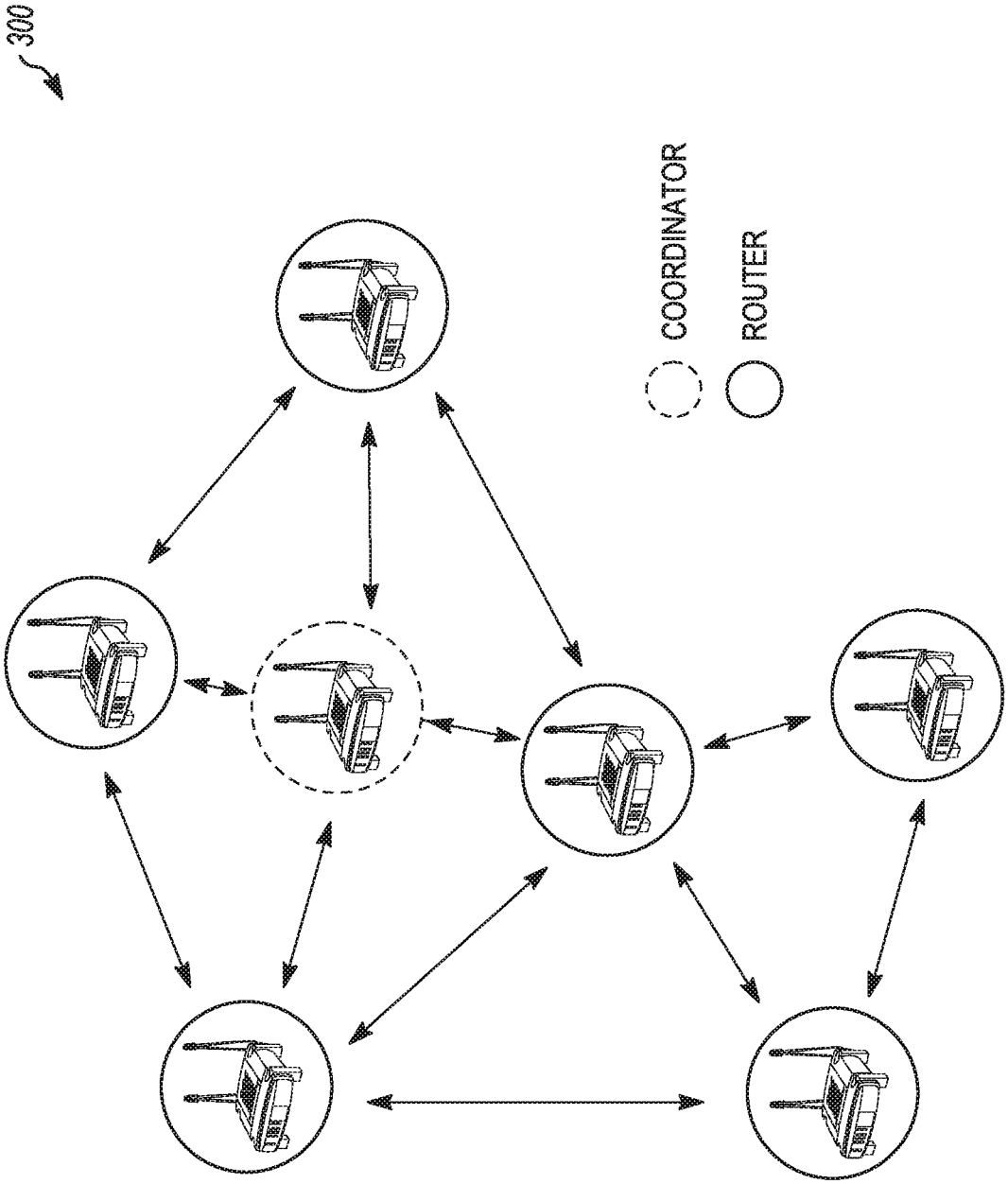

FIG. 3

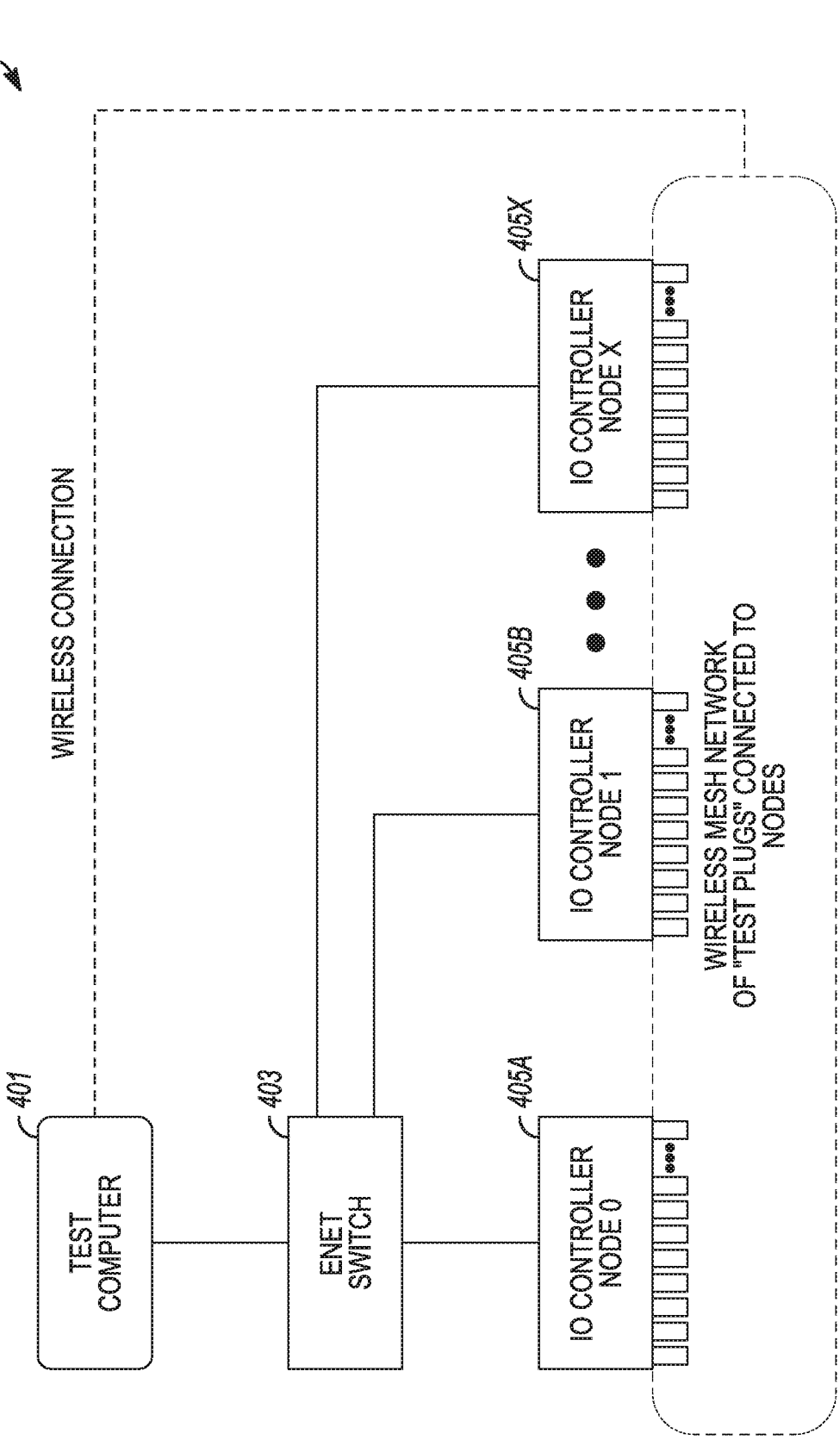
400
WIRELESS CONNECTION
401
TEST COMPUTER
403
ENET SWITCH
405A
IO CONTROLLER NODE 0
405B
IO CONTROLLER NODE 1
405X
IO CONTROLLER NODE X
WIRELESS MESH NETWORK OF "TEST PLUGS" CONNECTED TO NODES

FIG. 4

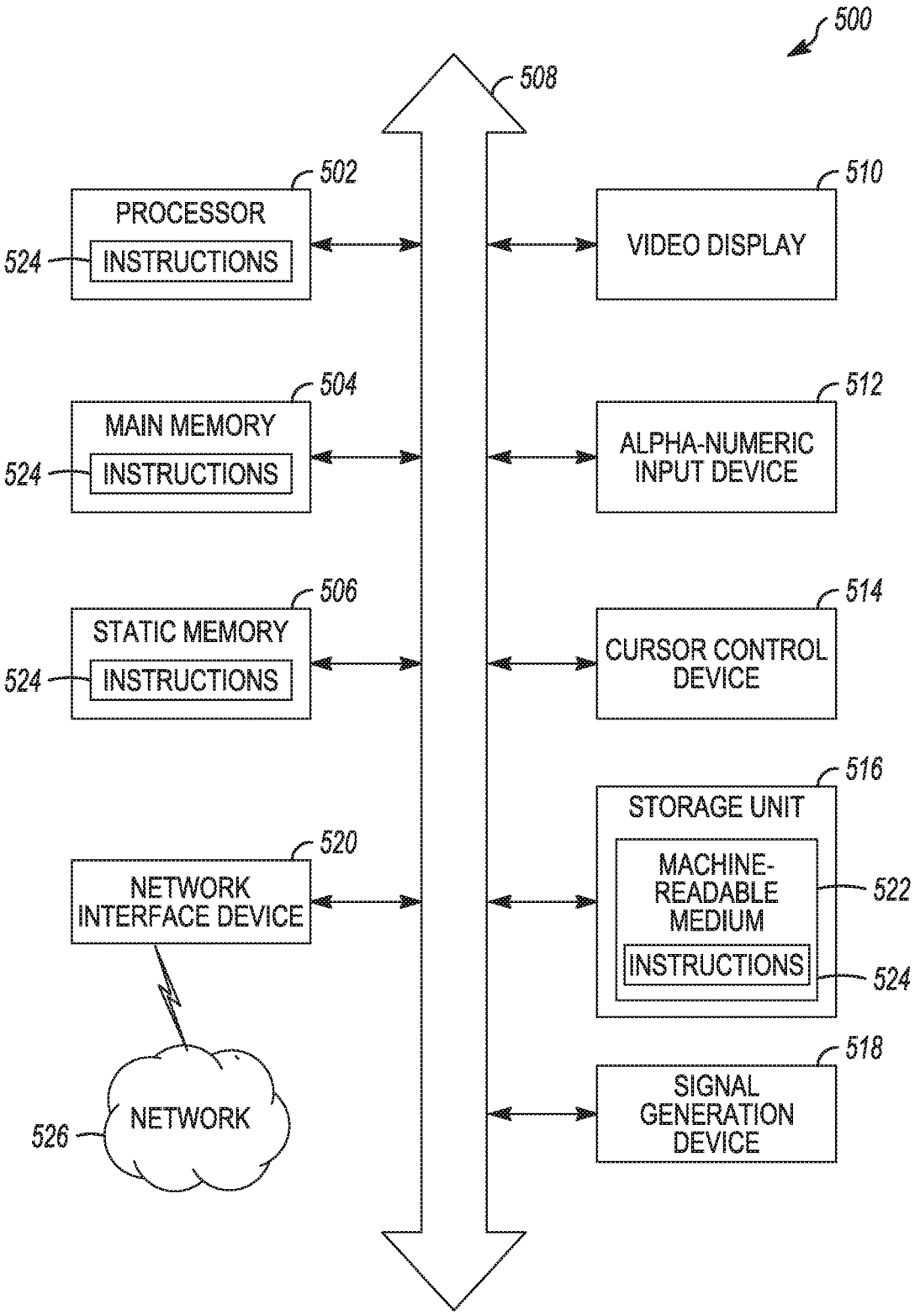
500
508
502
PROCESSOR
524
INSTRUCTIONS
504
MAIN MEMORY
524
INSTRUCTIONS
506
STATIC MEMORY
524
INSTRUCTIONS
520
NETWORK INTERFACE DEVICE
526
NETWORK
510
VIDEO DISPLAY
512
ALPHA-NUMERIC INPUT DEVICE
514
CURSOR CONTROL DEVICE
516
STORAGE UNIT
MACHINE-READABLE MEDIUM
522
INSTRUCTIONS
524
518
SIGNAL GENERATION DEVICE

FIG. 5