Fig.8

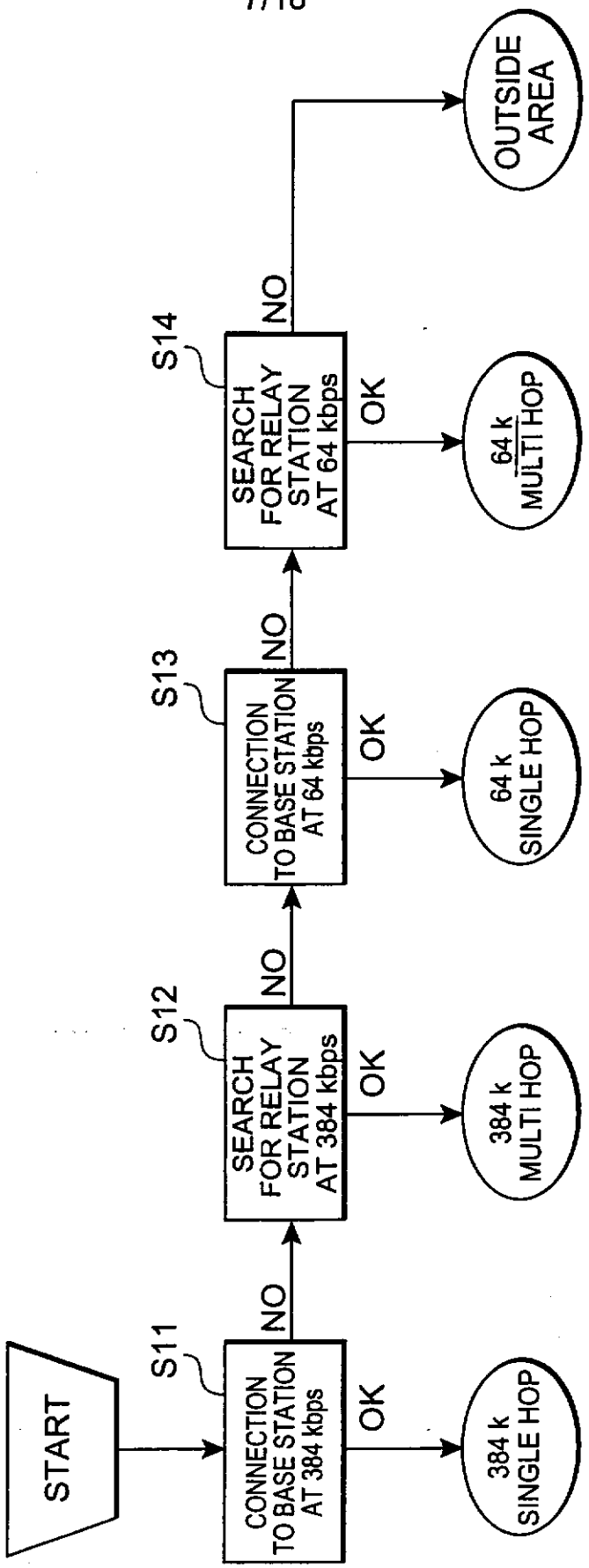
START
S11
CONNECTION TO BASE STATION AT 384 kbps
OK
384 k SINGLE HOP
NO
S12
SEARCH FOR RELAY STATION AT 384 kbps
OK
384 k MULTI HOP
NO
S13
CONNECTION TO BASE STATION AT 64 kbps
OK
64 k SINGLE HOP
NO
S14
SEARCH FOR RELAY STATION AT 64 kbps
OK
64 k MULTI HOP
NO
OUTSIDE AREA