(12) INTERNATIONAL APPLICATION PUBLISHED UNDER THE PATENT COOPERATION TREATY (PCT)

(19) World Intellectual Property Organization
International Bureau

(43) International Publication Date
26 July 2001 (26.07.2001)

PCT

(10) International Publication Number
WO 01/53037 A1

(51) International Patent Classification[7]: B23Q 11/00

(21) International Application Number: PCT/GB01/00197

(22) International Filing Date: 19 January 2001 (19.01.2001)

(25) Filing Language: English

(26) Publication Language: English

(30) Priority Data:
0001310.2 20 January 2000 (20.01.2000) GB

(71) Applicant: **DUSTBUBBLE LIMITED** [GB/GB]; 6 Nutwood Gardens, Cheshunt, Herts EN7 6UP (GB).

(71) Applicant *(for all designated States except US)*: **STYLES Christopher** [GB/GB]; 22 Marsh Close, Waltham Cross, Herts EN8 7JF (GB).

(74) Agent: **ELKINGTON AND FIFE**; Prospect House, 8 Pembroke Road, Sevenoaks, Kent TN13 1XR (GB).

(81) Designated States *(national)*: AE, AG, AL, AM, AT, AU, AZ, BA, BB, BG, BR, BY, BZ, CA, CH, CN, CR, CU, CZ, DE, DK, DM, DZ, EE, ES, FI, GB, GD, GE, GH, GM, HR, HU, ID, IL, IN, IS, JP, KE, KG, KP, KR, KZ, LC, LK, LR, LS, LT, LU, LV, MA, MD, MG, MK, MN, MW, MX, MZ, NO, NZ, PL, PT, RO, RU, SD, SE, SG, SI, SK, SL, TJ, TM, TR, TT, TZ, UA, UG, US, UZ, VN, YU, ZA, ZW.

(84) Designated States *(regional)*: ARIPO patent (GH, GM, KE, LS, MW, MZ, SD, SL, SZ, TZ, UG, ZW), Eurasian patent (AM, AZ, BY, KG, KZ, MD, RU, TJ, TM), European patent (AT, BE, CH, CY, DE, DK, ES, FI, FR, GB, GR, IE, IT, LU, MC, NL, PT, SE, TR), OAPI patent (BF, BJ, CF, CG, CI, CM, GA, GN, GW, ML, MR, NE, SN, TD, TG).

Published:
— *with international search report*

For two-letter codes and other abbreviations, refer to the "Guidance Notes on Codes and Abbreviations" appearing at the beginning of each regular issue of the PCT Gazette.

(54) Title: DEBRIS COLLECTION DEVICE AND METHOD

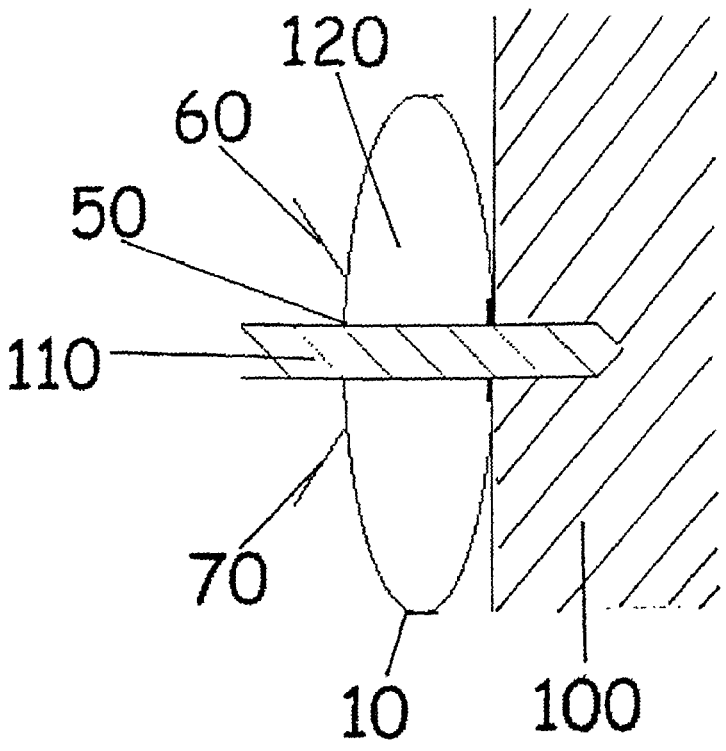

(57) Abstract: A collection device for use with a drill to capture debris ejected from drilling into a surface (100) comprising a body (10) formed of flexible material having a first, substantially flat, configuration and a second erect, configuration defining a cavity (120). The body includes a hole (50) for receiving a drill bit into the cavity when the body is erect and adhesive means (80) for adhering the body to the surface (100).

WO 01/53037 A1