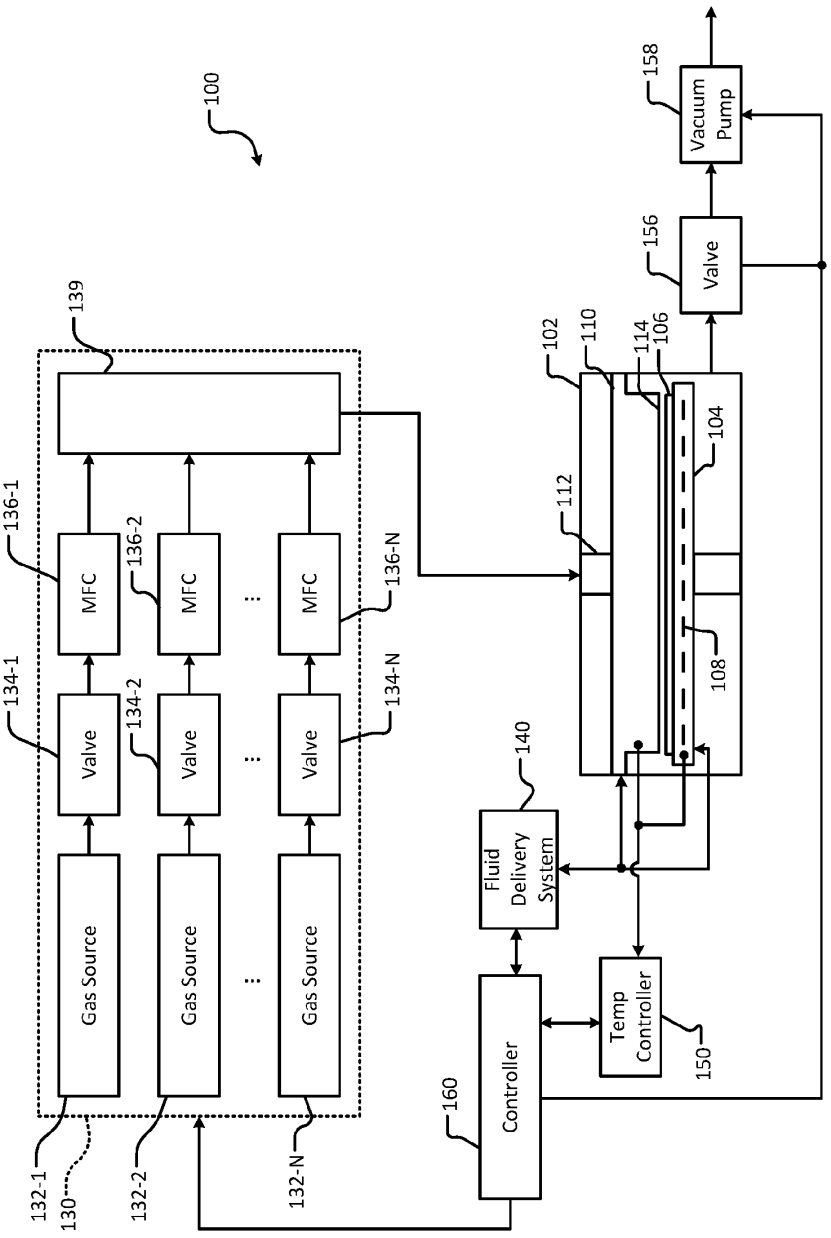
100
158
Vacuum Pump
156
Valve
102
110
114
106
104
112
108
139
136-1
136-2
136-N
MFC
MFC
MFC
134-1
134-2
134-N
Valve
Valve
Valve
140
Fluid Delivery System
Gas Source
Gas Source
Gas Source
132-1
130
132-2
132-N
160
Controller
Temp Controller
150

FIG. 1

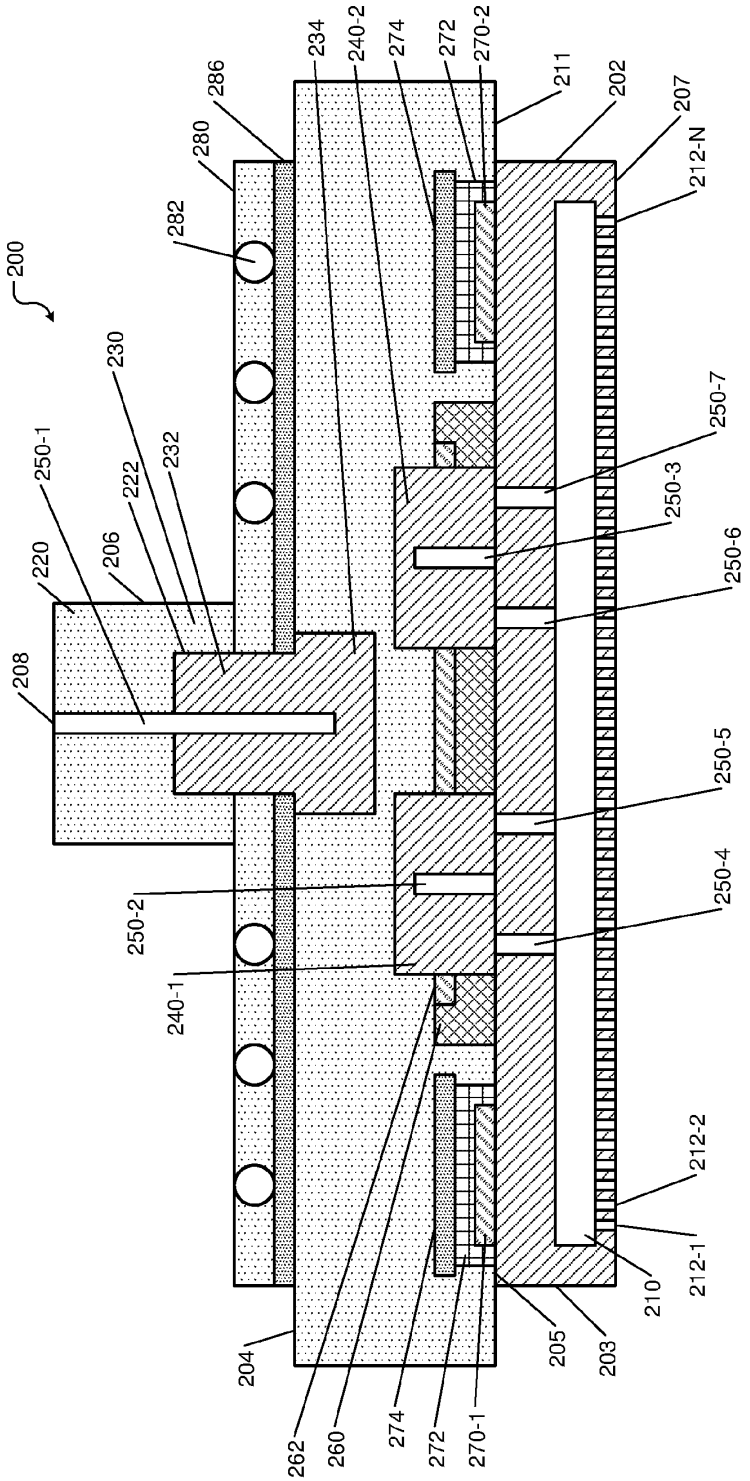
200
208
220
206
222
230
232
250-1
282
280
286
234
240-2
274
272
270-2
211
202
207
212-N
250-7
250-3
250-6
250-5
250-4
250-2
240-1
212-2
212-1
210
203
205
204
262
260
274
272
270-1

FIG. 2

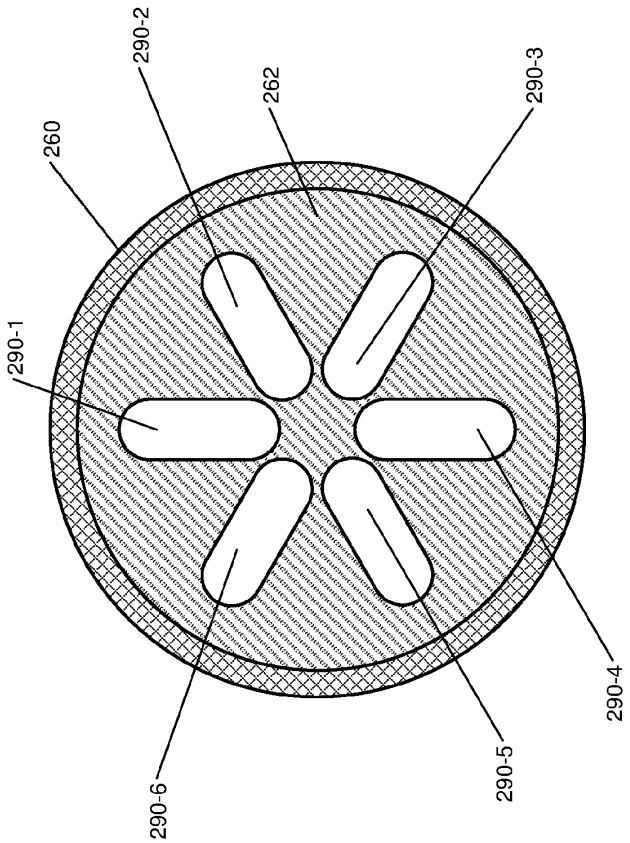

FIG. 3

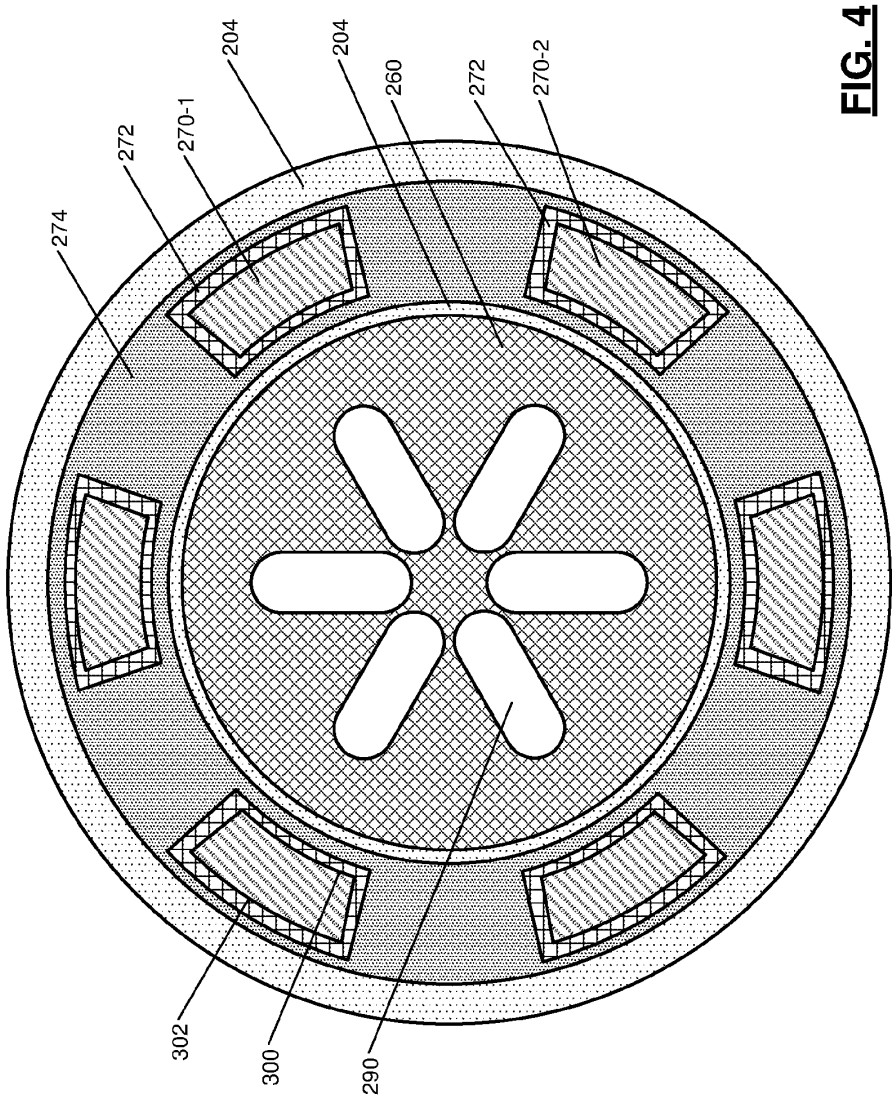

FIG. 4

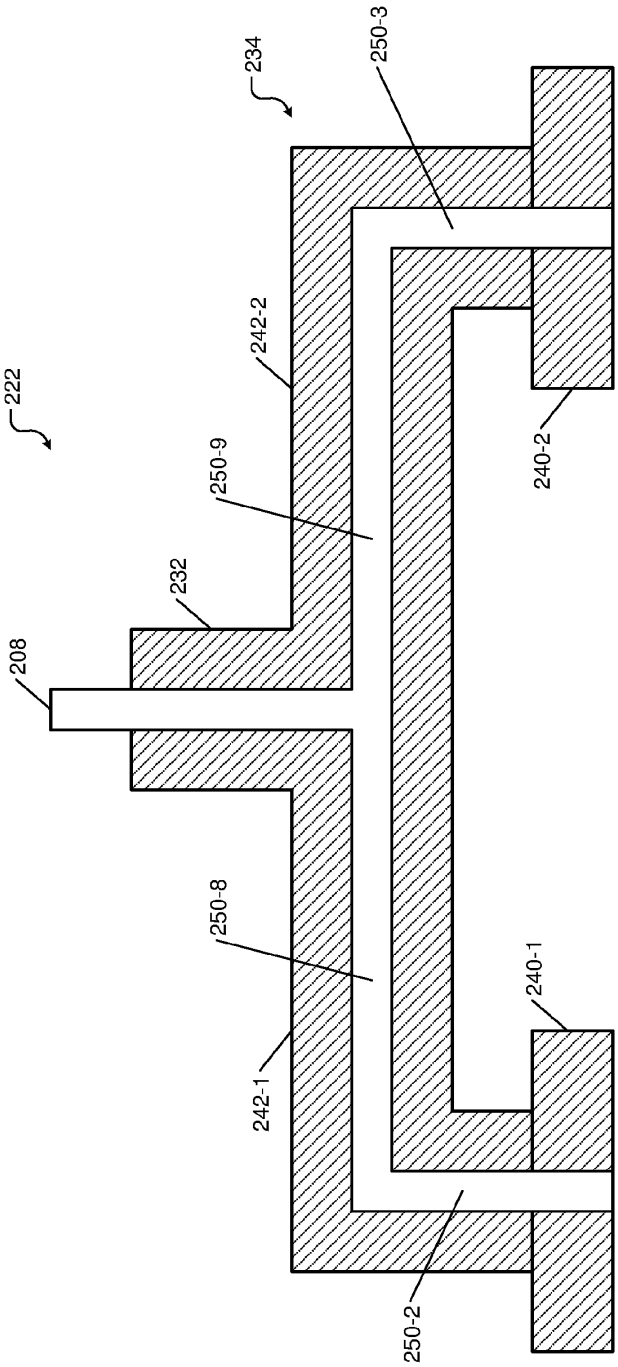

FIG. 5

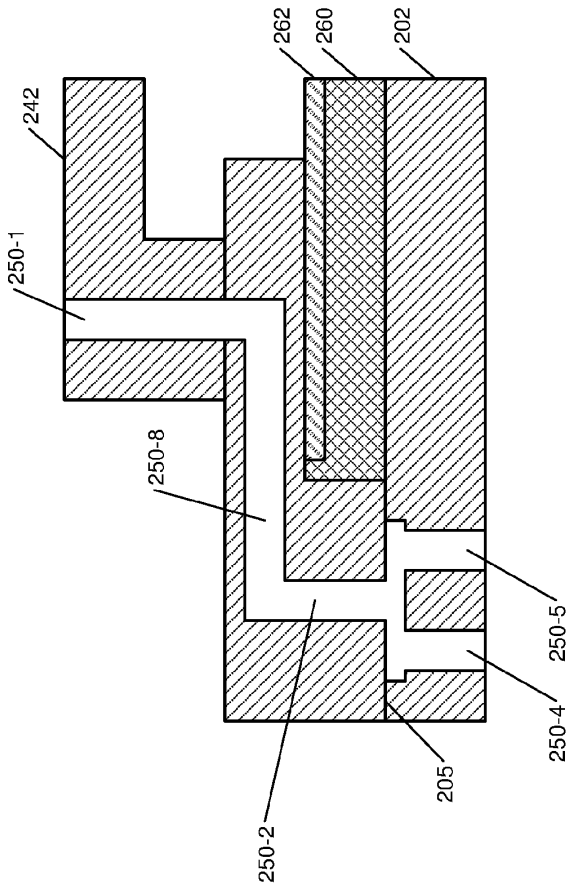

FIG. 6

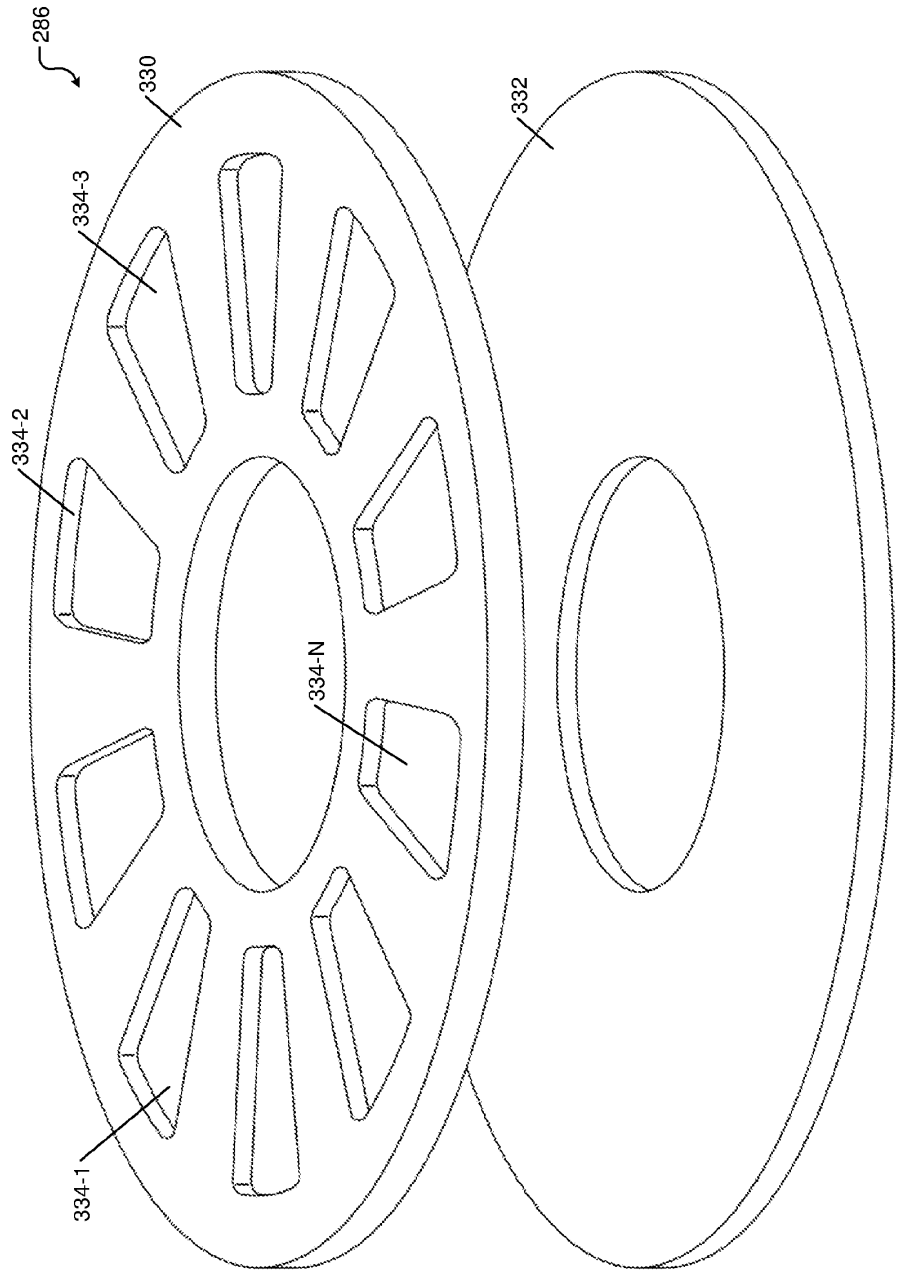

FIG. 7