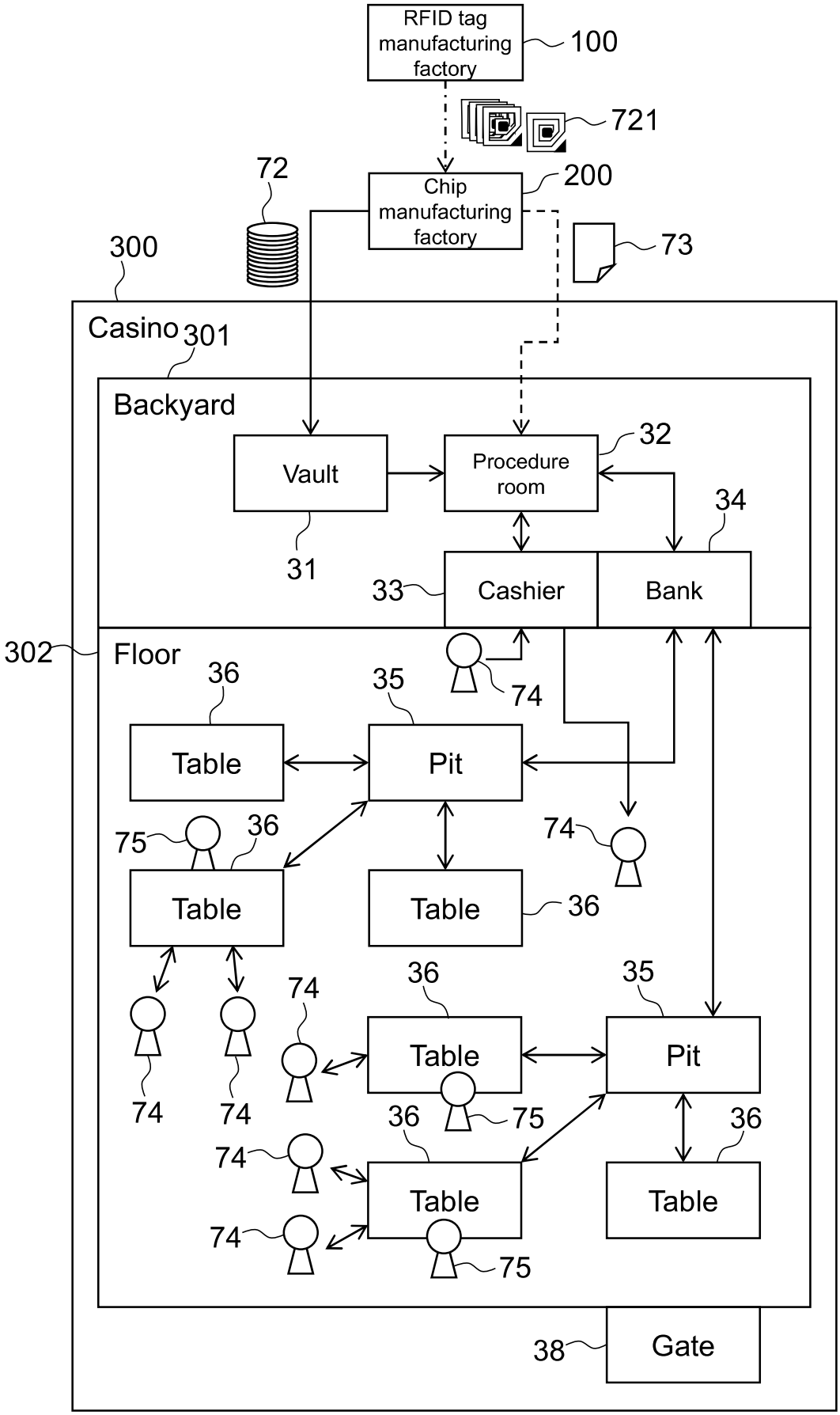
RFID tag manufacturing factory
100
721
72
Chip manufacturing factory
200
73
300
Casino
301
Backyard
Vault
Procedure room
32
34
31
33
Cashier
Bank
302
Floor
36
35
74
Table
Pit
75
36
74
Table
Table
36
74
36
35
74
74
74
Table
Pit
36
75
36
36
74
Table
Table
74
75
38
Gate

FIG.1

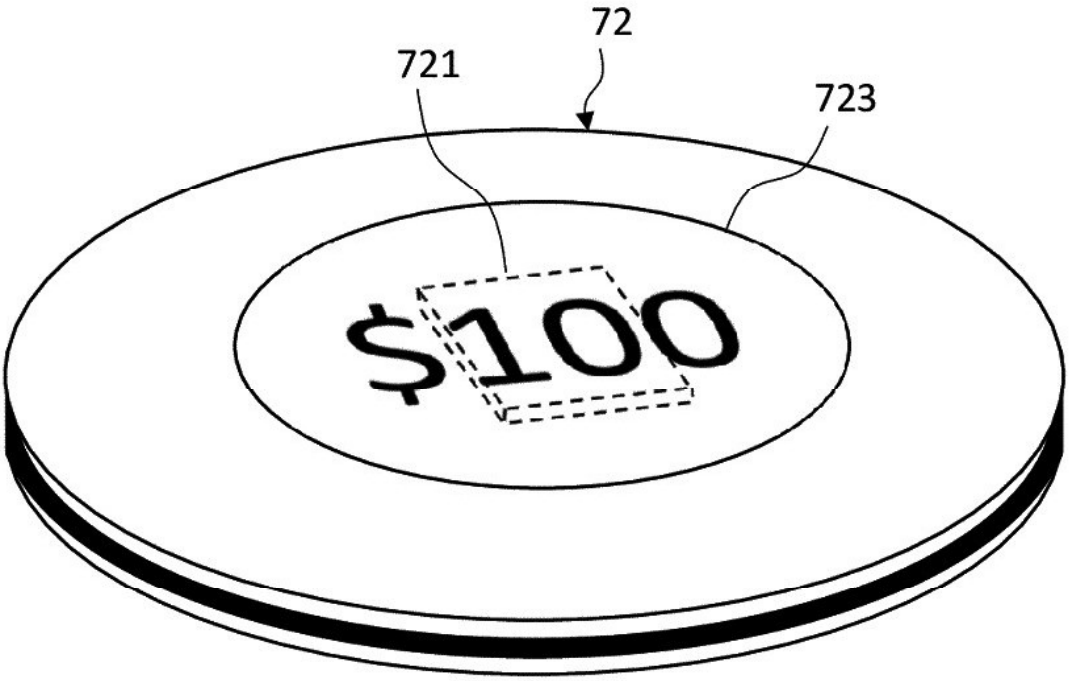

FIG.2

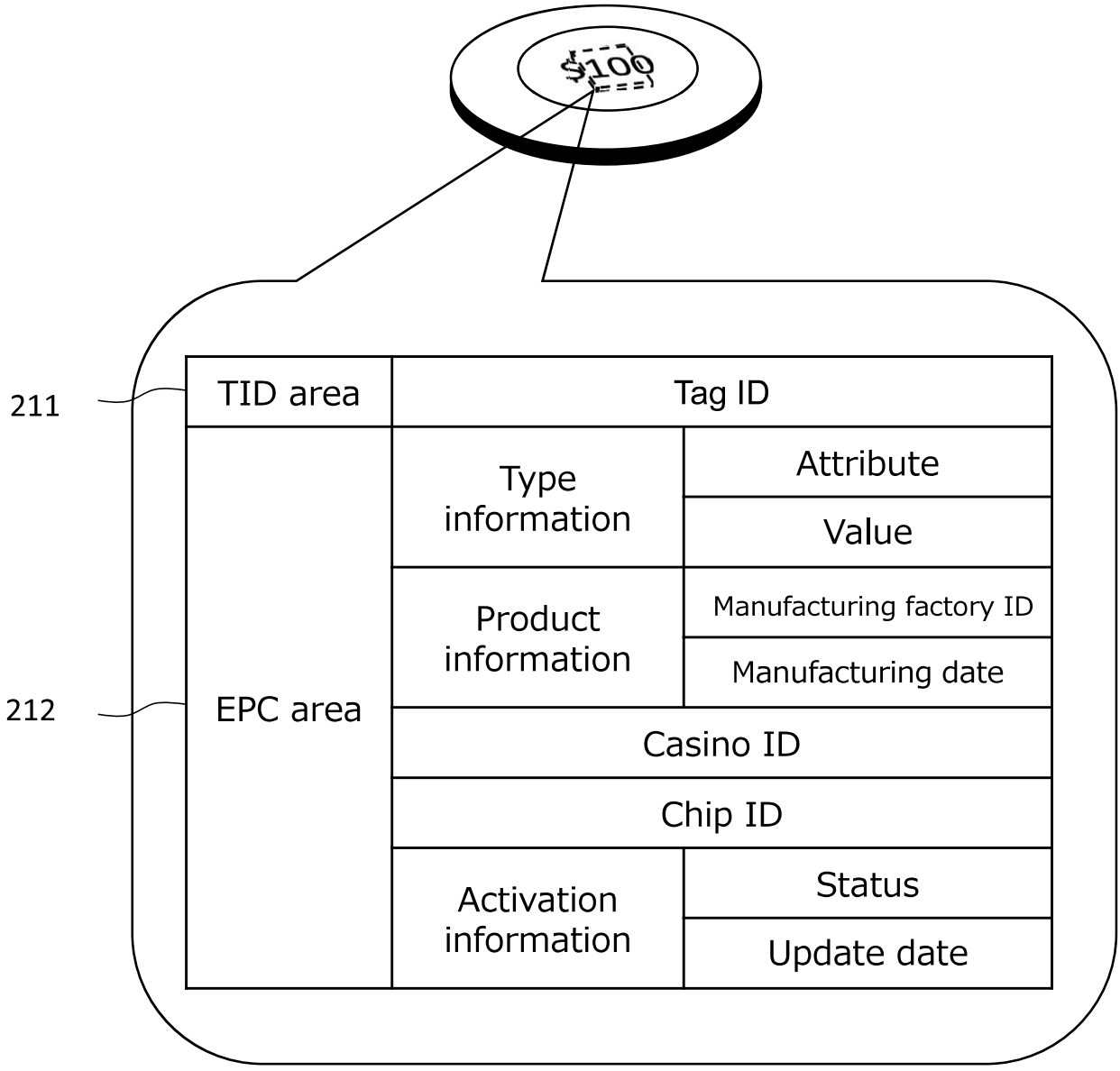
$100
211
212
TID area
Tag ID
EPC area
Type information
Attribute
Value
Product information
Manufacturing factory ID
Manufacturing date
Casino ID
Chip ID
Activation information
Status
Update date

FIG.3

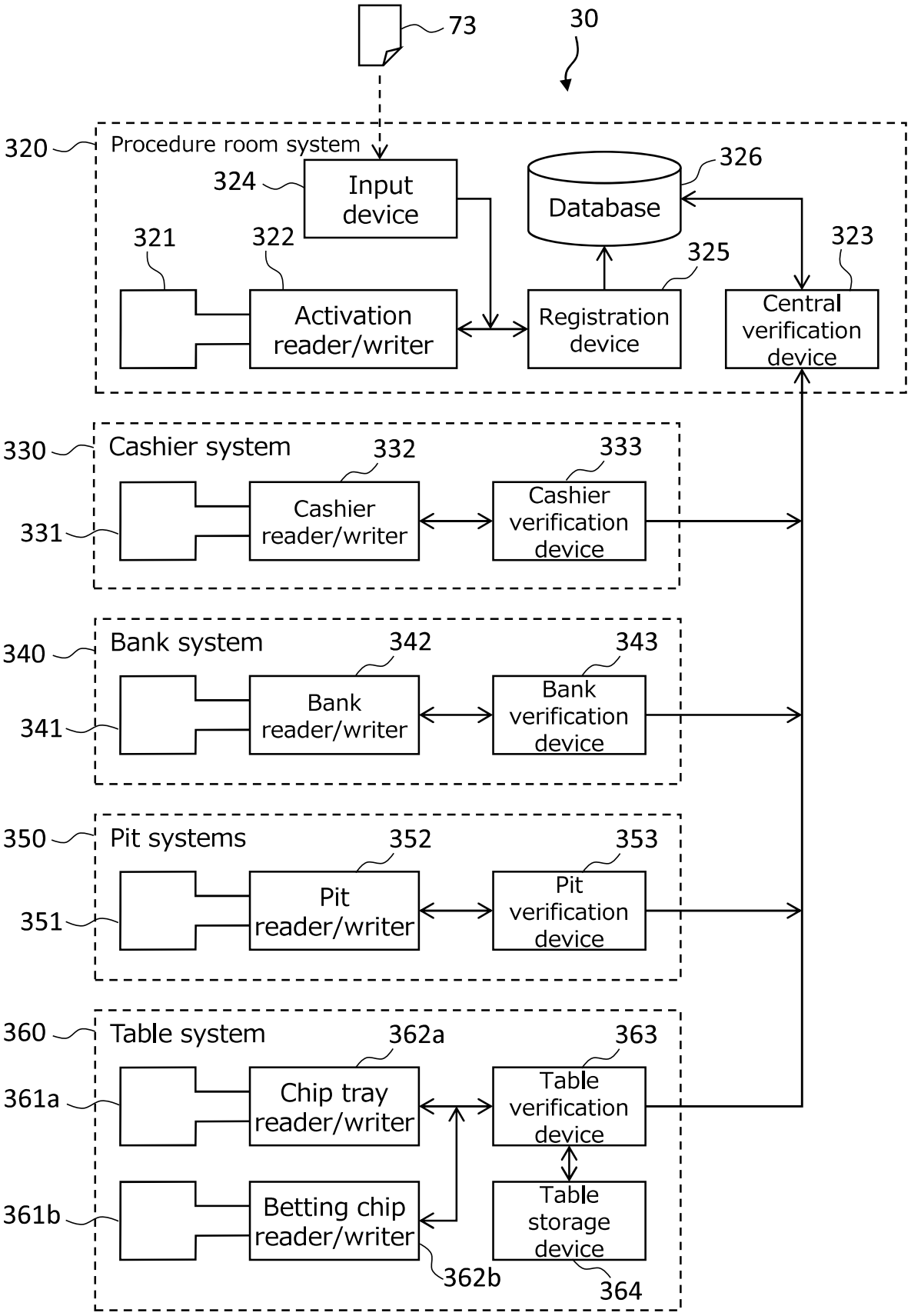
73
30
320
Procedure room system
324
Input device
326
Database
321
322
323
325
Activation reader/writer
Registration device
Central verification device
330
Cashier system
332
333
331
Cashier reader/writer
Cashier verification device
340
Bank system
342
343
341
Bank reader/writer
Bank verification device
350
Pit systems
352
353
351
Pit reader/writer
Pit verification device
360
Table system
362a
363
361a
Chip tray reader/writer
Table verification device
361b
Betting chip reader/writer
Table storage device
362b
364

FIG.4

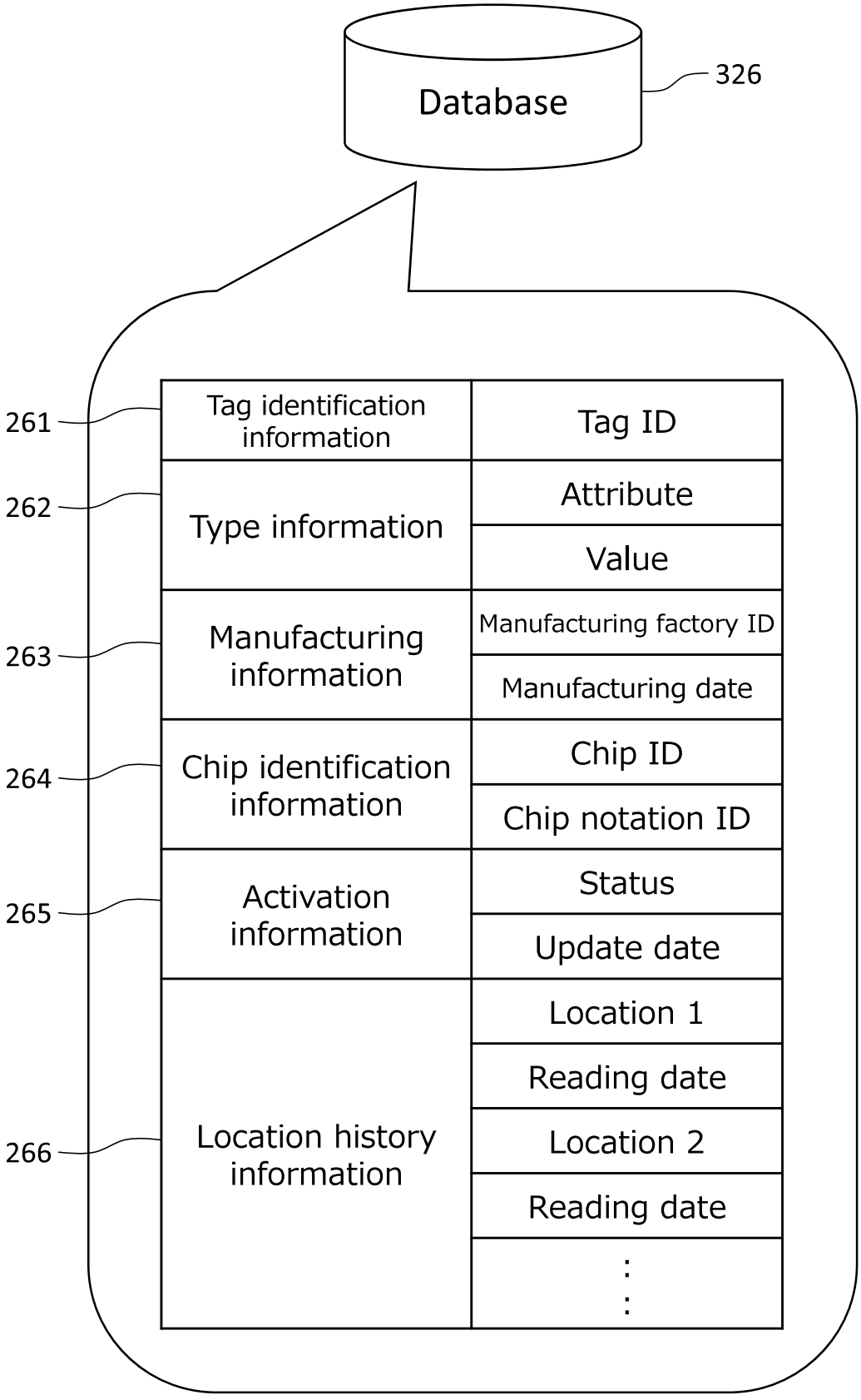
Database
326
261
Tag identification information
Tag ID
262
Type information
Attribute
Value
263
Manufacturing information
Manufacturing factory ID
Manufacturing date
264
Chip identification information
Chip ID
Chip notation ID
265
Activation information
Status
Update date
266
Location history information
Location 1
Reading date
Location 2
Reading date
⋮
⋮

FIG.5

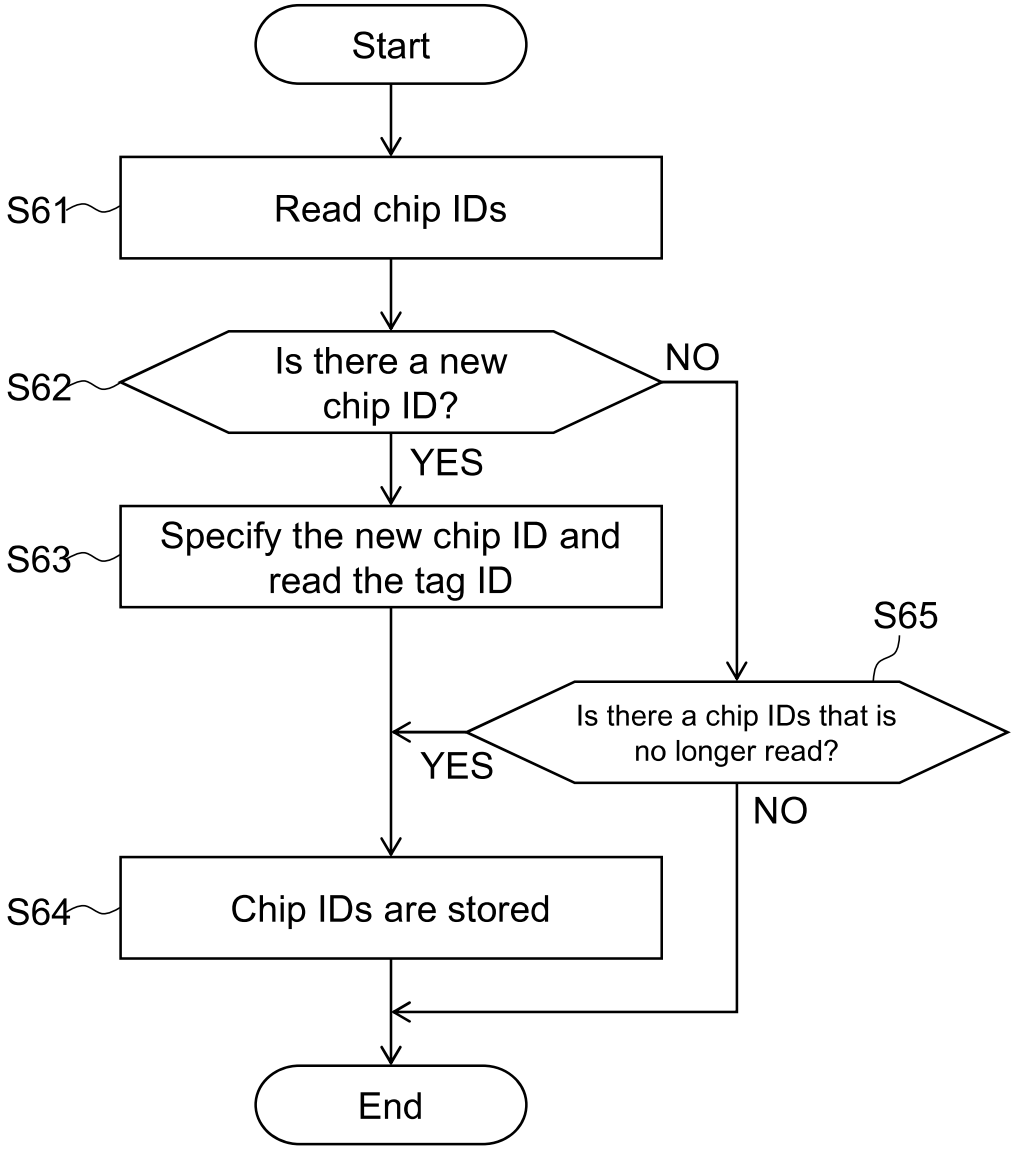
Start
S61
Read chip IDs
S62
Is there a new chip ID?
NO
YES
S63
Specify the new chip ID and read the tag ID
S65
Is there a chip IDs that is no longer read?
YES
NO
S64
Chip IDs are stored
End

FIG.6

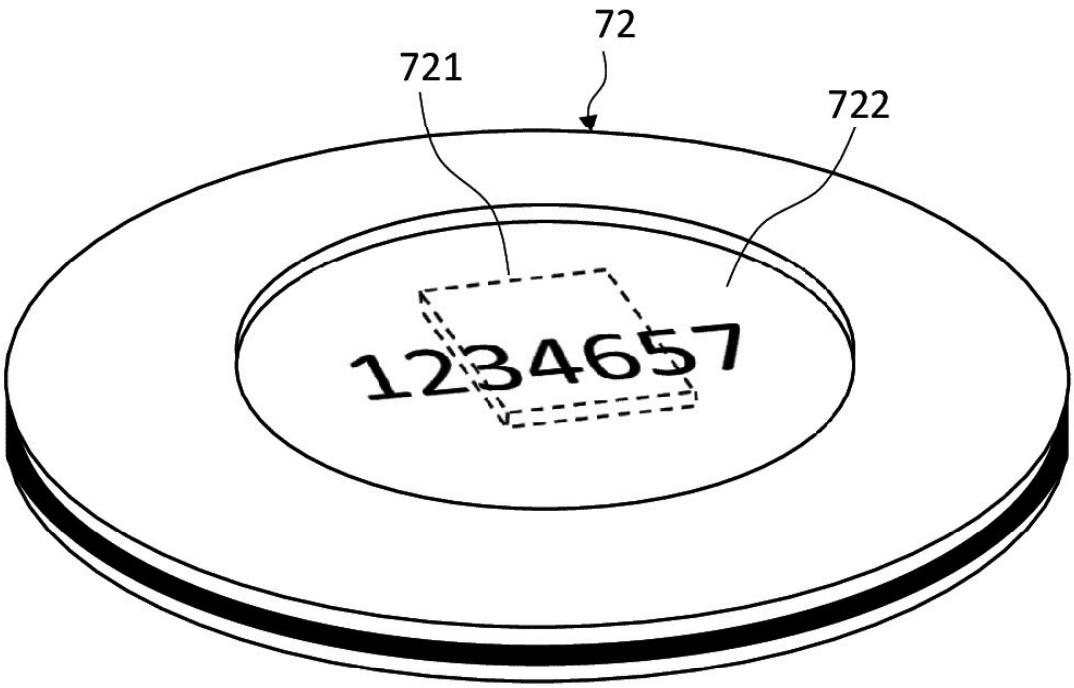

FIG.7

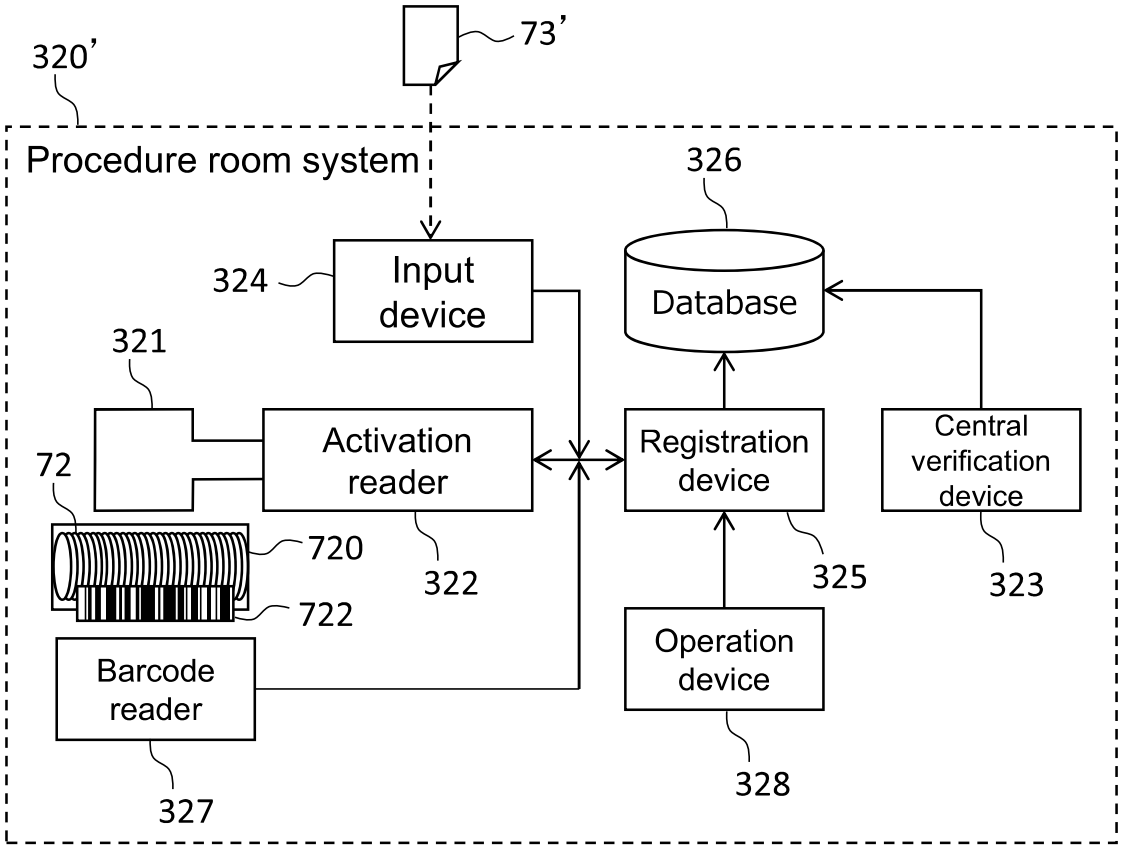
320'
73'
Procedure room system
326
Database
324
Input device
321
Activation reader
Registration device
Central verification device
72
720
722
322
325
323
Barcode reader
Operation device
327
328

FIG.8

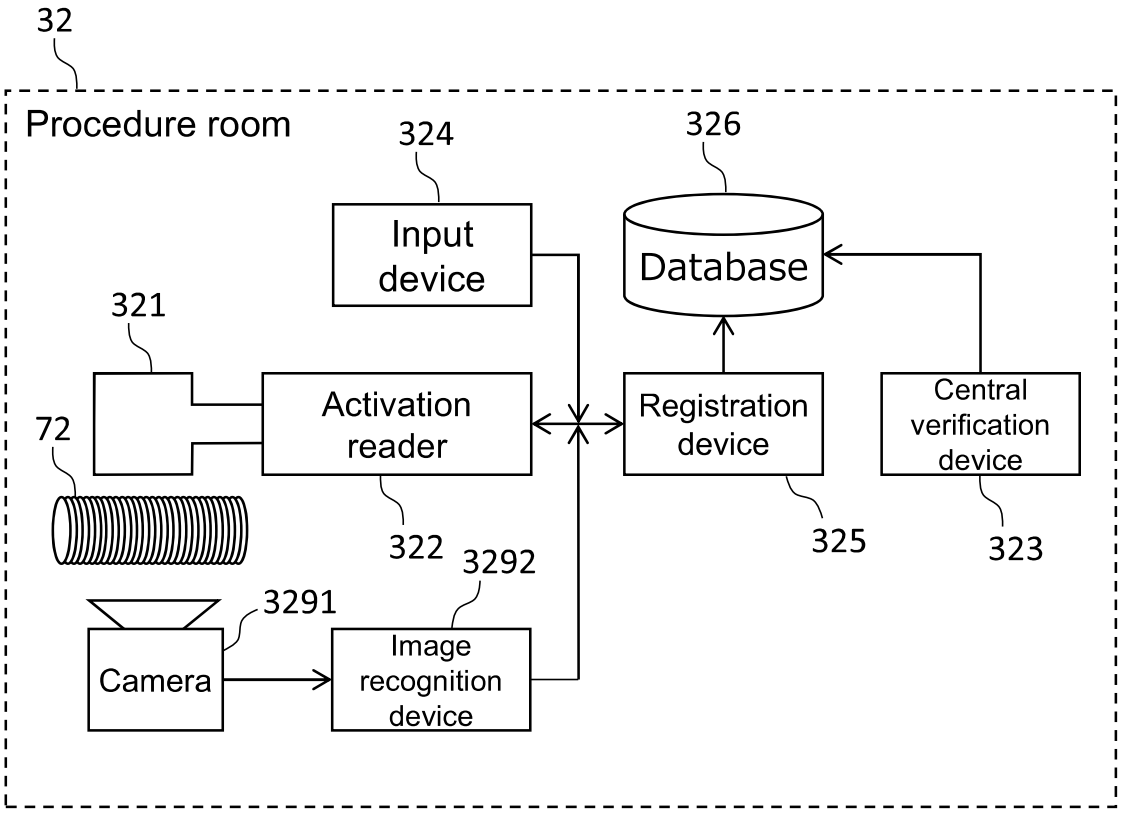
32
Procedure room
324
Input device
326
Database
321
72
Activation reader
Registration device
Central verification device
322
325
323
3292
3291
Camera
Image recognition device

FIG.9

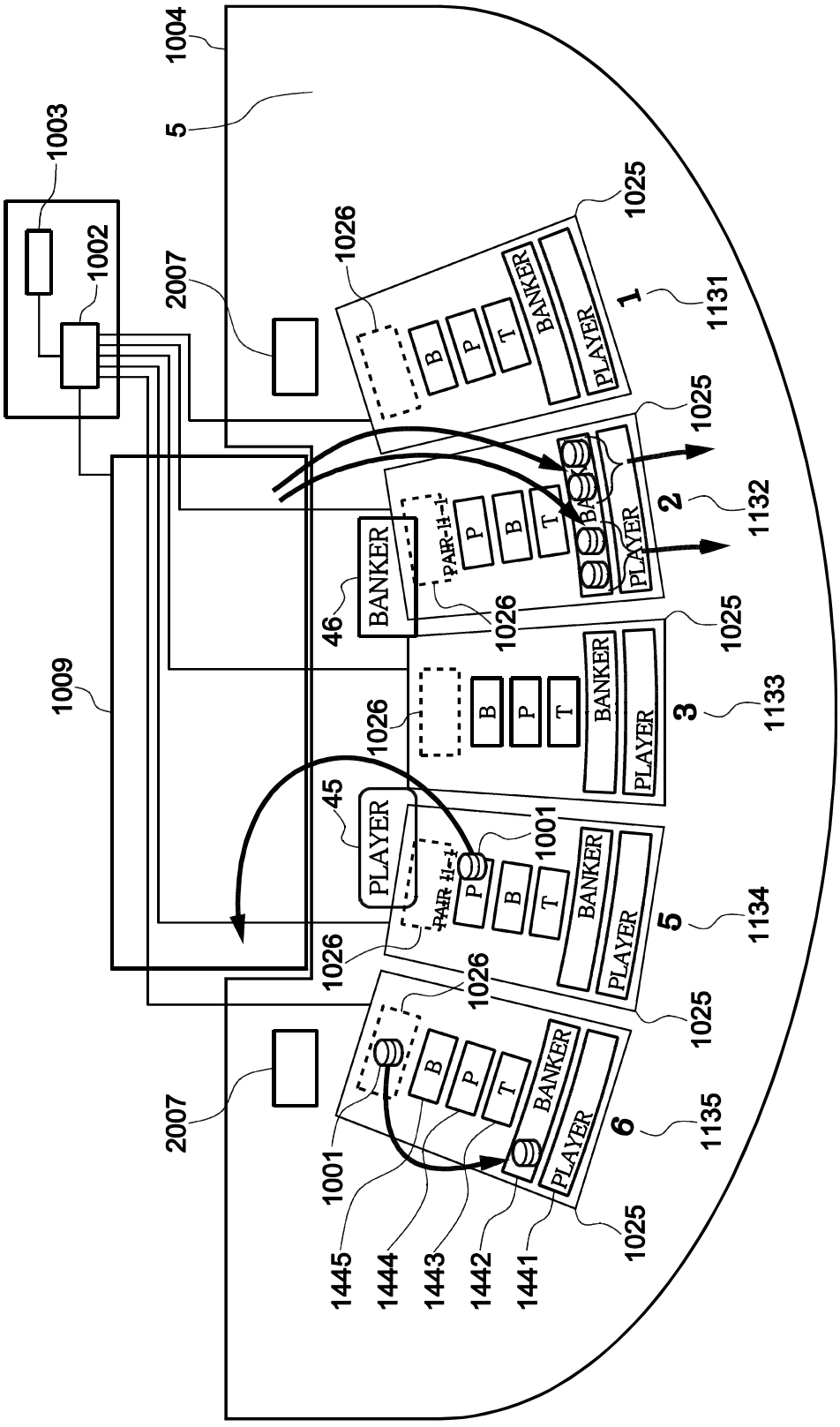
1004
5
1003
1002
2007
1026
1025
B
P
T
BANKER
PLAYER
1
1131
1025
2
1132
PAIR 11-1
P
B
T
BANKER
PLAYER
46
1026
1025
1009
1026
B
P
T
BANKER
PLAYER
3
1133
45
PLAYER
1001
PAIR 11-1
P
B
T
BANKER
PLAYER
5
1134
1026
1026
1025
2007
1001
B
P
T
BANKER
PLAYER
6
1135
1025
1445
1444
1443
1442
1441

FIG.10

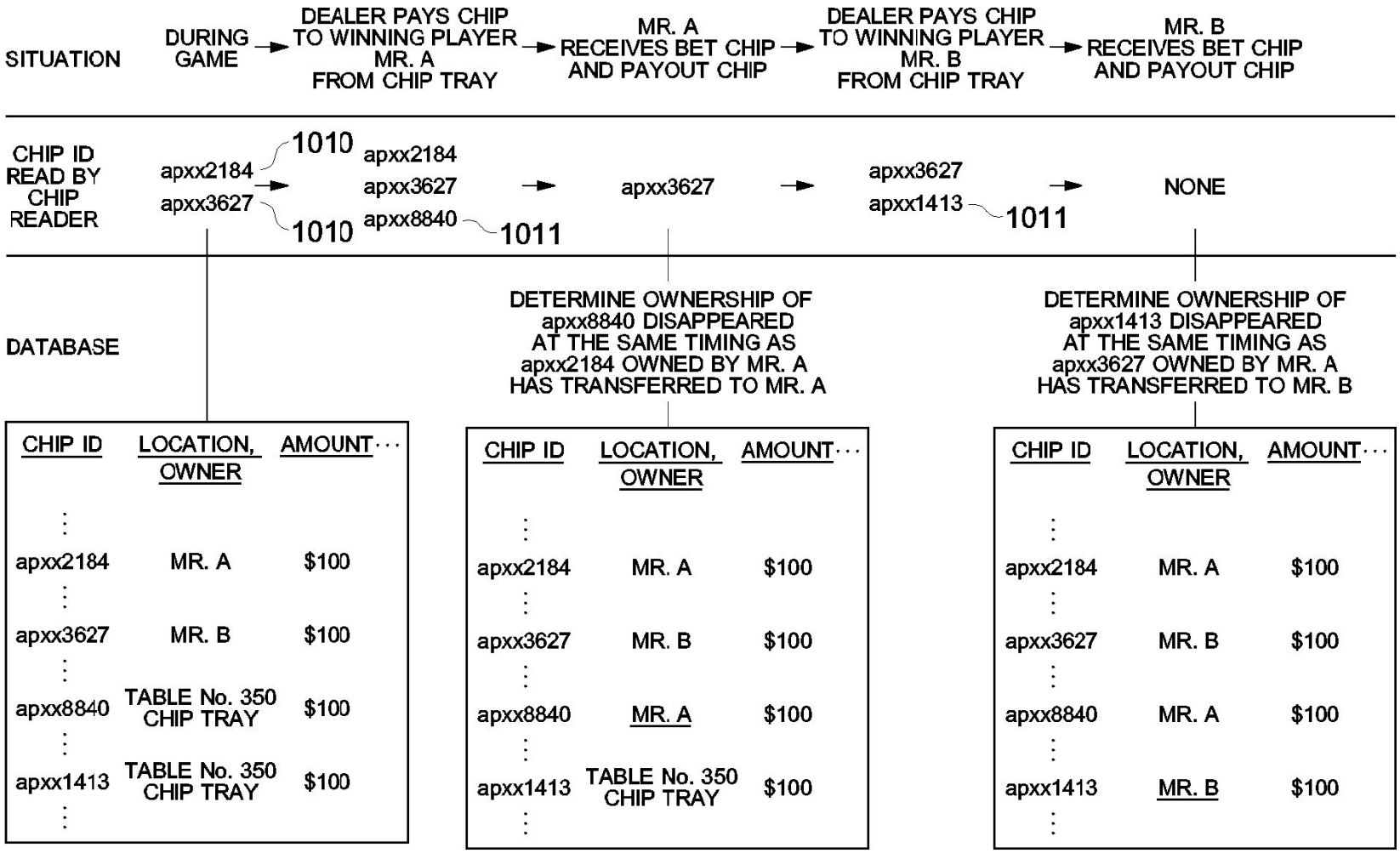
SITUATION
DURING GAME
DEALER PAYS CHIP TO WINNING PLAYER MR. A FROM CHIP TRAY
MR. A RECEIVES BET CHIP AND PAYOUT CHIP
DEALER PAYS CHIP TO WINNING PLAYER MR. B FROM CHIP TRAY
MR. B RECEIVES BET CHIP AND PAYOUT CHIP
CHIP ID READ BY CHIP READER
apxx2184
apxx3627
1010
1010
apxx2184
apxx3627
apxx8840
1011
apxx3627
apxx3627
apxx1413
1011
NONE
DATABASE
DETERMINE OWNERSHIP OF apxx8840 DISAPPEARED AT THE SAME TIMING AS apxx2184 OWNED BY MR. A HAS TRANSFERRED TO MR. A
DETERMINE OWNERSHIP OF apxx1413 DISAPPEARED AT THE SAME TIMING AS apxx3627 OWNED BY MR. A HAS TRANSFERRED TO MR. B
CHIP ID
LOCATION, OWNER
AMOUNT
apxx2184 MR. A $100
apxx3627 MR. B $100
apxx8840 TABLE No. 350 CHIP TRAY $100
apxx1413 TABLE No. 350 CHIP TRAY $100
CHIP ID
LOCATION, OWNER
AMOUNT
apxx2184 MR. A $100
apxx3627 MR. B $100
apxx8840 MR. A $100
apxx1413 TABLE No. 350 CHIP TRAY $100
CHIP ID
LOCATION, OWNER
AMOUNT
apxx2184 MR. A $100
apxx3627 MR. B $100
apxx8840 MR. A $100
apxx1413 MR. B $100

FIG.11

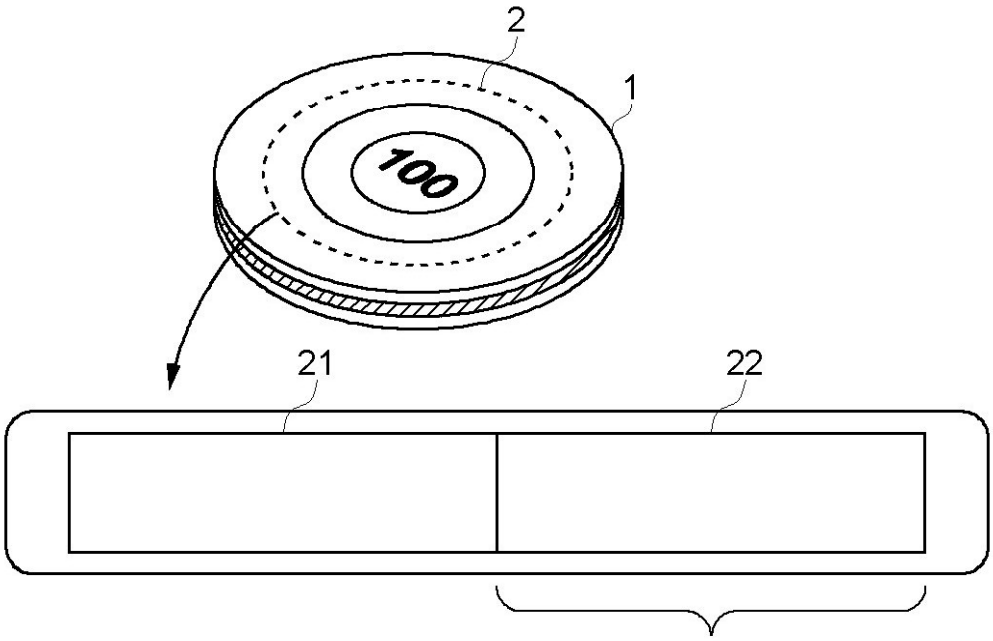

221 222 223

DATE/TIME	PLACE/EVENT	OWNER
2019/1/28 13:00	FACTORY PRODUCTION	—
2019/2/10 11:03	RECEPTION BY CASINO	CASINO
⋮	⋮	⋮
⋮	⋮	⋮
2019/2/27 16:02	CAGE	MR. A
2019/2/27 16:15	TABLE NO. 325	MR. A
2019/2/27 16:43	TABLE NO. 325	MR. B
2019/2/27 17:01	EXIT	MR. B
2019/2/28 0:40	ENTRY	MR. B

FIG.12

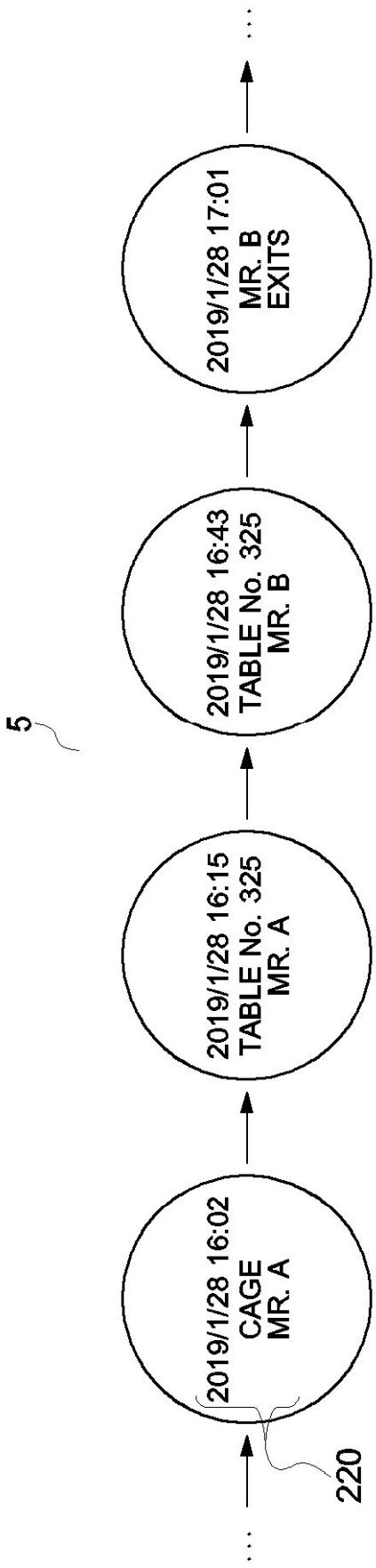
5
2019/1/28 16:02
CAGE
MR. A
220
2019/1/28 16:15
TABLE No. 325
MR. A
2019/1/28 16:43
TABLE No. 325
MR. B
2019/1/28 17:01
MR. B
EXITS

FIG.13

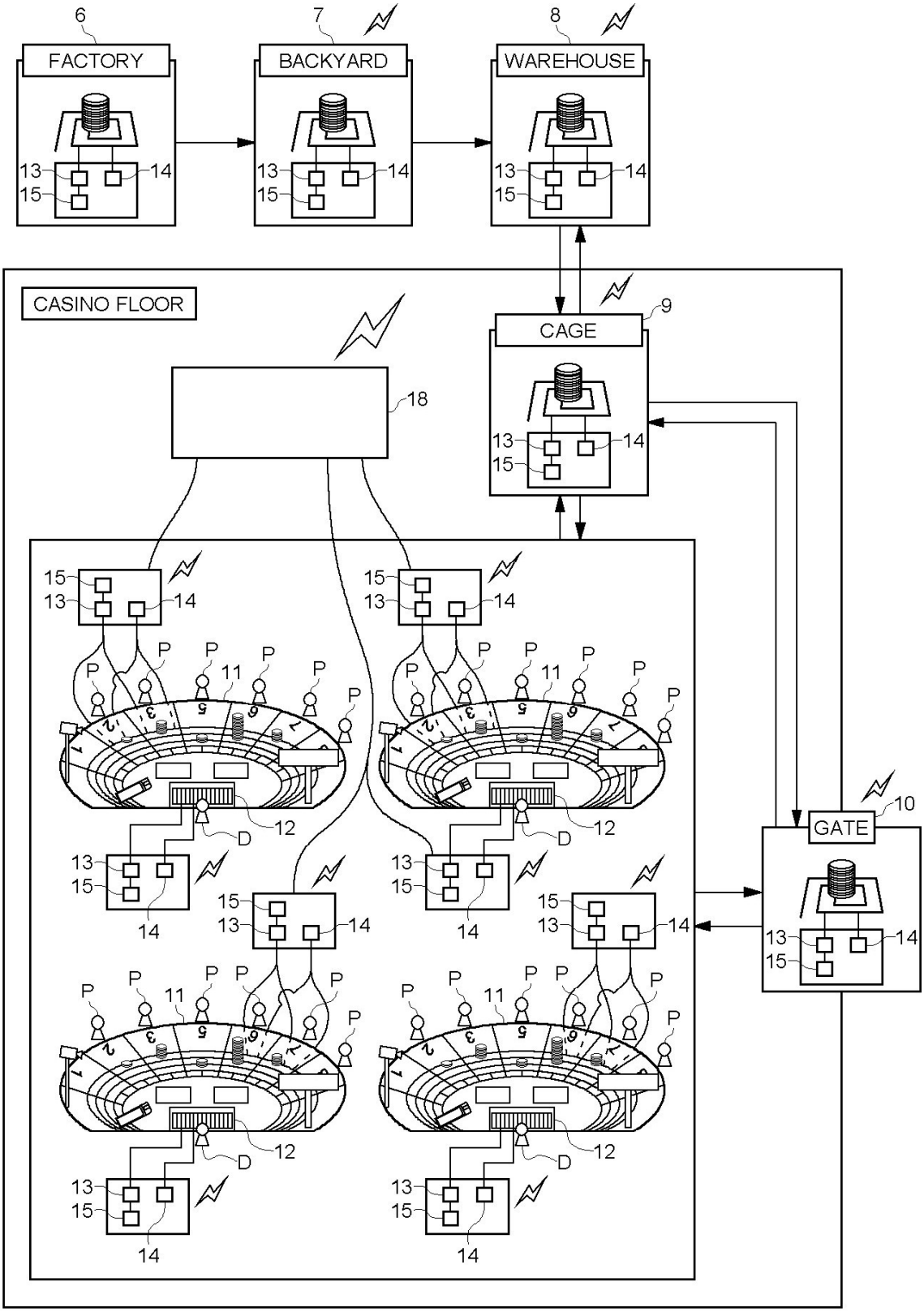
6
FACTORY
7
BACKYARD
8
WAREHOUSE
13
14
15
CASINO FLOOR
9
CAGE
18
10
GATE
P
11
12
D

FIG.14

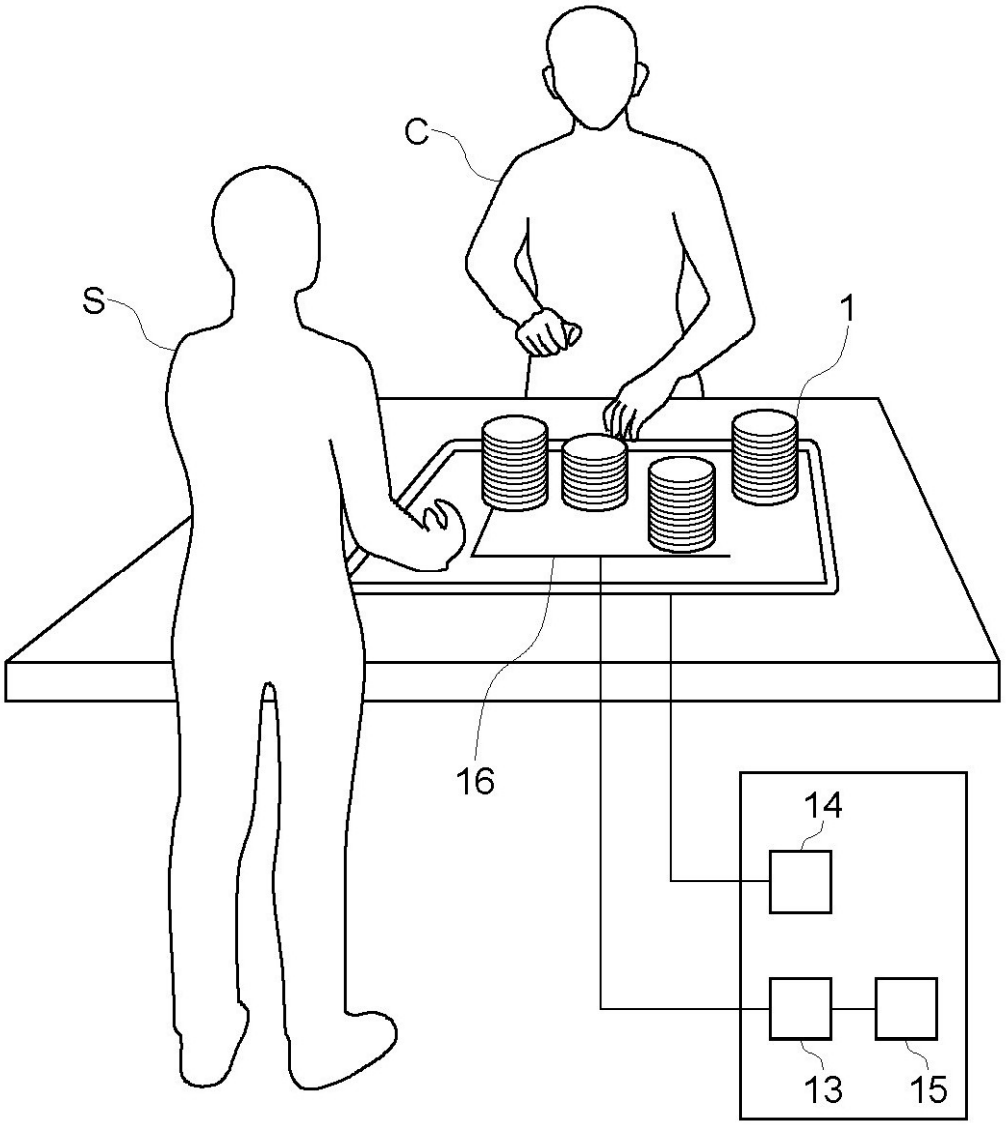

FIG.15

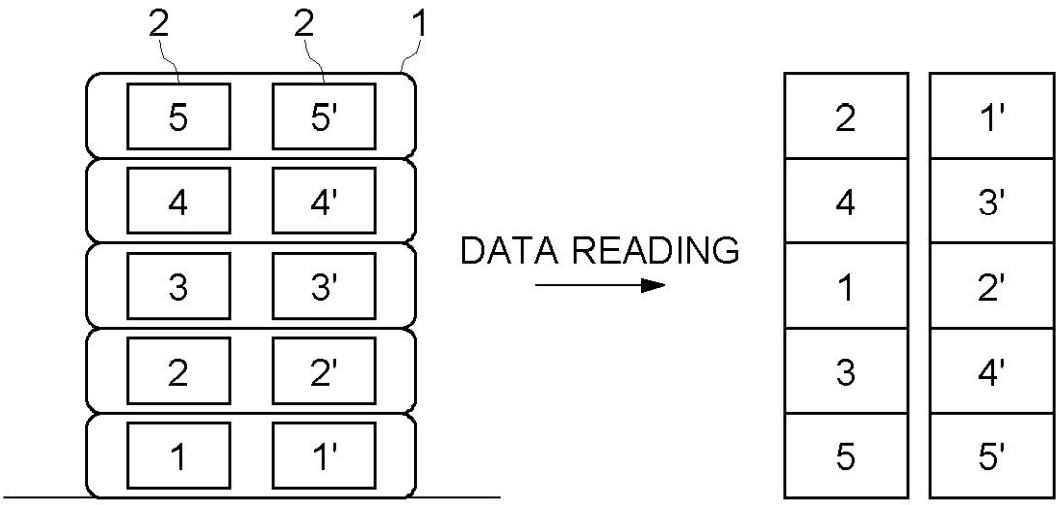

FIG.16A

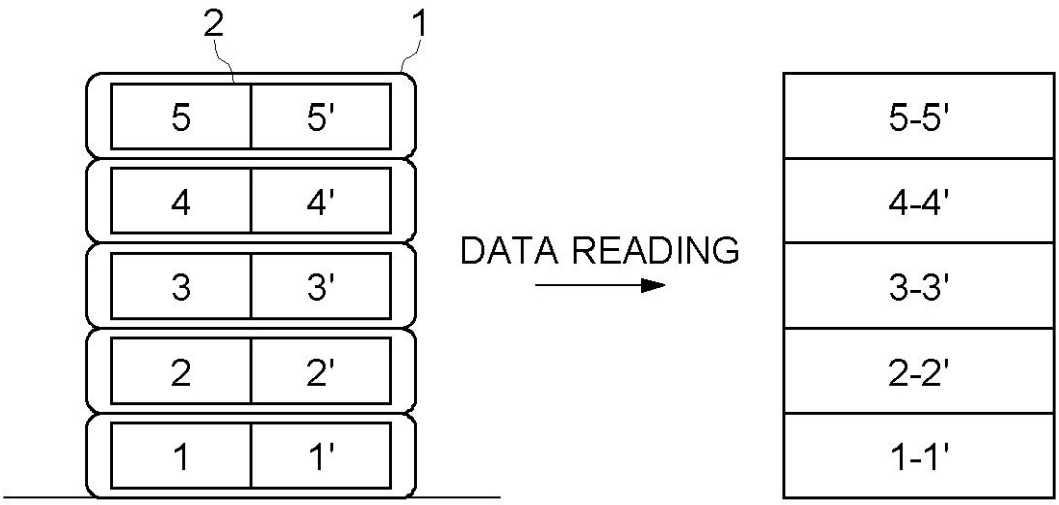

FIG.16B

17

ID NUMBER	CASINO NAME	TYPE	FACE VALUE	LOCATION INFORMATION HISTORY
⋮	⋮	⋮	⋮	⋮
apxx7216-3319	ABC Casino	ROLLING CHIP FOR VIP	$500	○→○→···→○→○
apxx7216-3320	ABC Casino	ROLLING CHIP FOR VIP	$1,000	○→○→···→○→○
apxx7216-3321	ABC Casino	ROLLING CHIP FOR VIP	$1,000	○→○→···→○→○
⋮	⋮	⋮	⋮	⋮

FIG.17

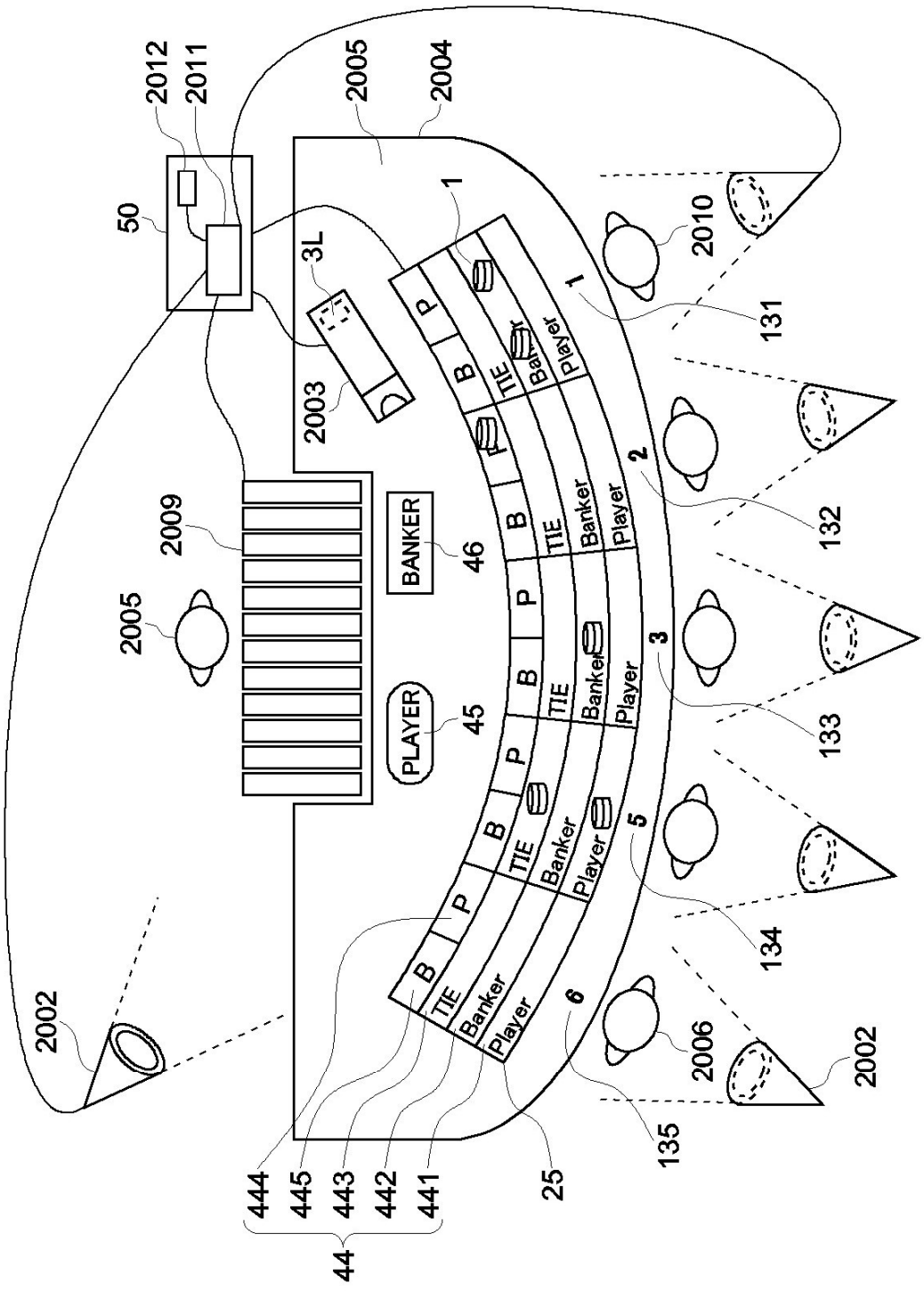
2012
2011
50
2005
2004
1
3L
2003
2010
131
2009
2005
BANKER
46
PLAYER
45
132
133
134
135
2002
2006
2002
444
445
443
442
441
44
25
B
P
TIE
Banker
Player
1
2
3
5
6

FIG.18

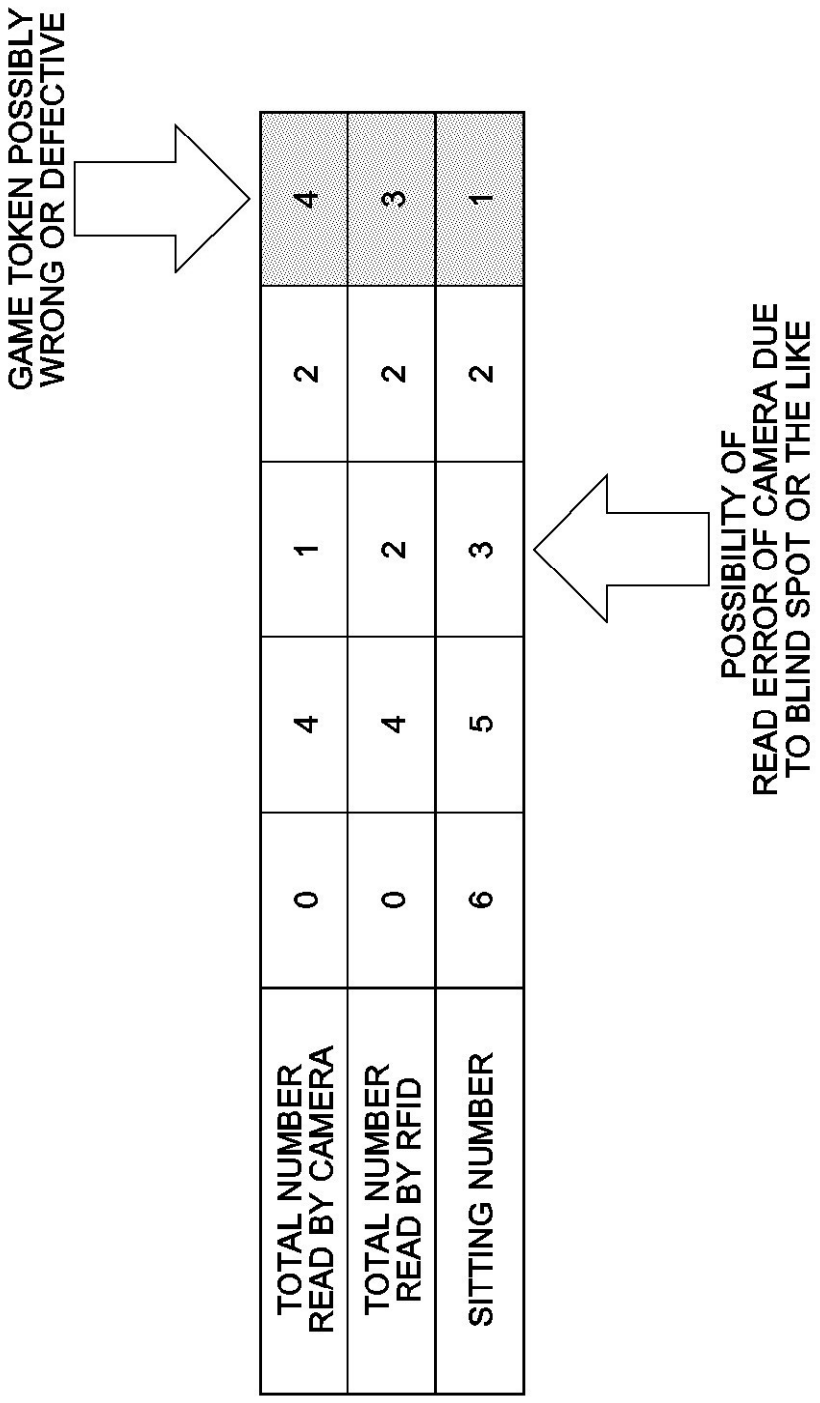
GAME TOKEN POSSIBLY WRONG OR DEFECTIVE
POSSIBILITY OF READ ERROR OF CAMERA DUE TO BLIND SPOT OR THE LIKE
TOTAL NUMBER READ BY CAMERA
TOTAL NUMBER READ BY RFID
SITTING NUMBER
0 4 1 2 4
0 4 2 2 3
6 5 3 2 1

FIG.19

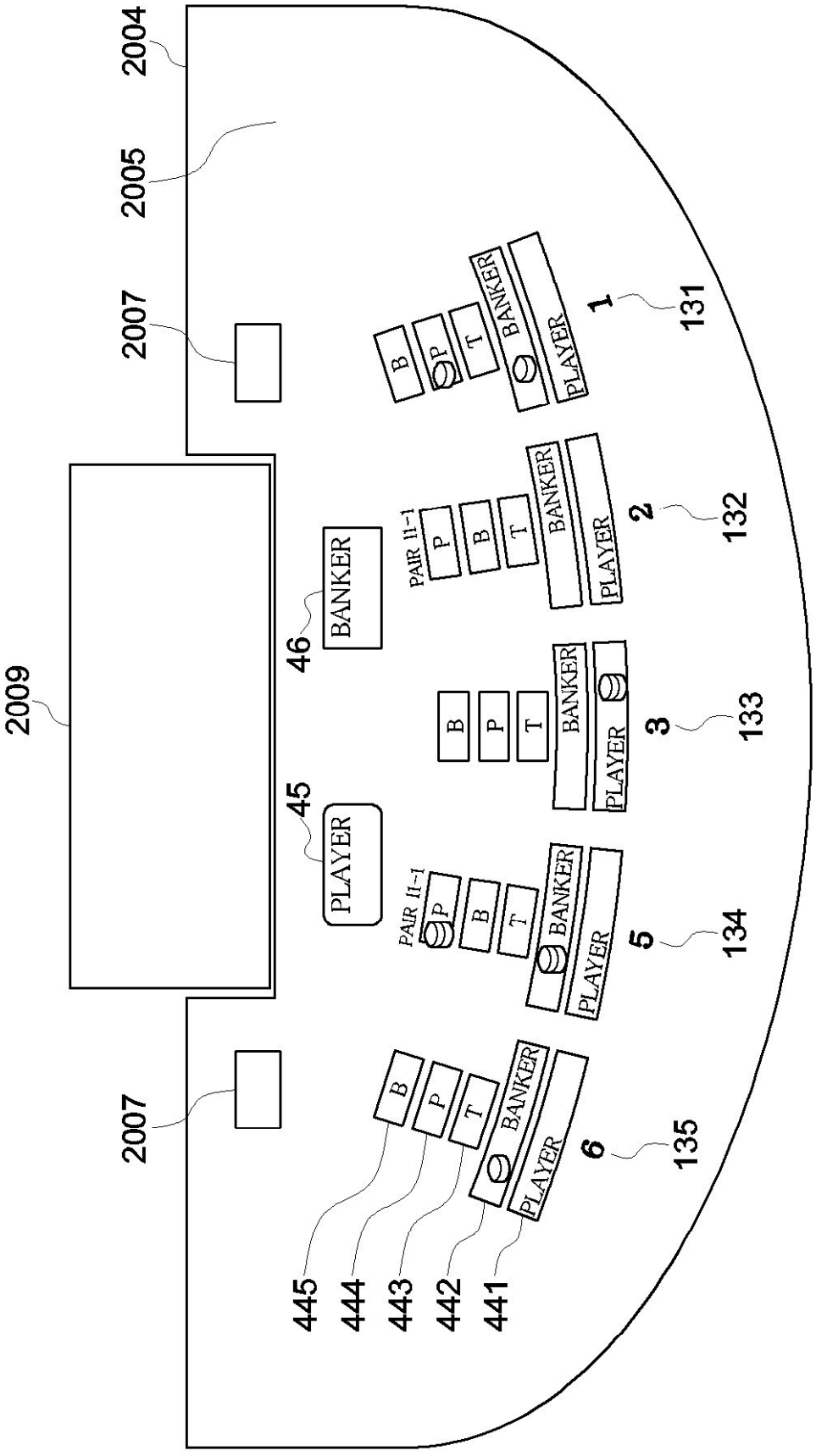
2004
2005
2007
2007
2009
B
P
T
BANKER
PLAYER
1
131
PAIR 11-1
P
B
T
BANKER
PLAYER
2
132
46
BANKER
B
P
T
BANKER
PLAYER
3
133
45
PLAYER
PAIR 11-1
P
B
T
BANKER
PLAYER
5
134
B
P
T
BANKER
PLAYER
6
135
445
444
443
442
441

FIG.20

CHIP READING RESULT AT BETTING AREA

PLACE AND ID OF BET CHIP	ONE PIECE ON BANKER (ID3)	TWO PIECES ON BANKER (ID12 AND 13) TWO PIECES ON BANKER PAIR (ID6 AND 18)	TWO PIECES ON PLAYER (ID29 AND 54)	ONE PIECE ON BANKER PAIR (ID75) ONE PIECE ON PLAYER PAIR (ID77)	ONE PIECE ON BANKER (ID97) ONE PIECE ON PLAYER PAIR (ID68)
READING RESULT BY CAMERA	ONE PIECE ON BANKER	TWO PIECE ON BANKER	TWO PIECES ON PLAYER	NONE	ONE PIECE ON BANKER ONE PIECE ON PLAYER PAIR
READING RESULT BY RFID (READ ID)	ID3	ID6、12、13、18	ID29、54	NONE	ID68、97
SITTING NUMBER	6	5	3	2	1

GAME RESULT DETERMINED BY GAME RESULT DETERMINATION DEVICE	BANKER WINS
ID THAT CHIP TRAY DETERMINATION DEVICE DETERMINES BEING INCREASED FROM BEFORE COLLECTION TO AFTER COLLECTION	ID6、18、29、54、68、75、77

FIG.21

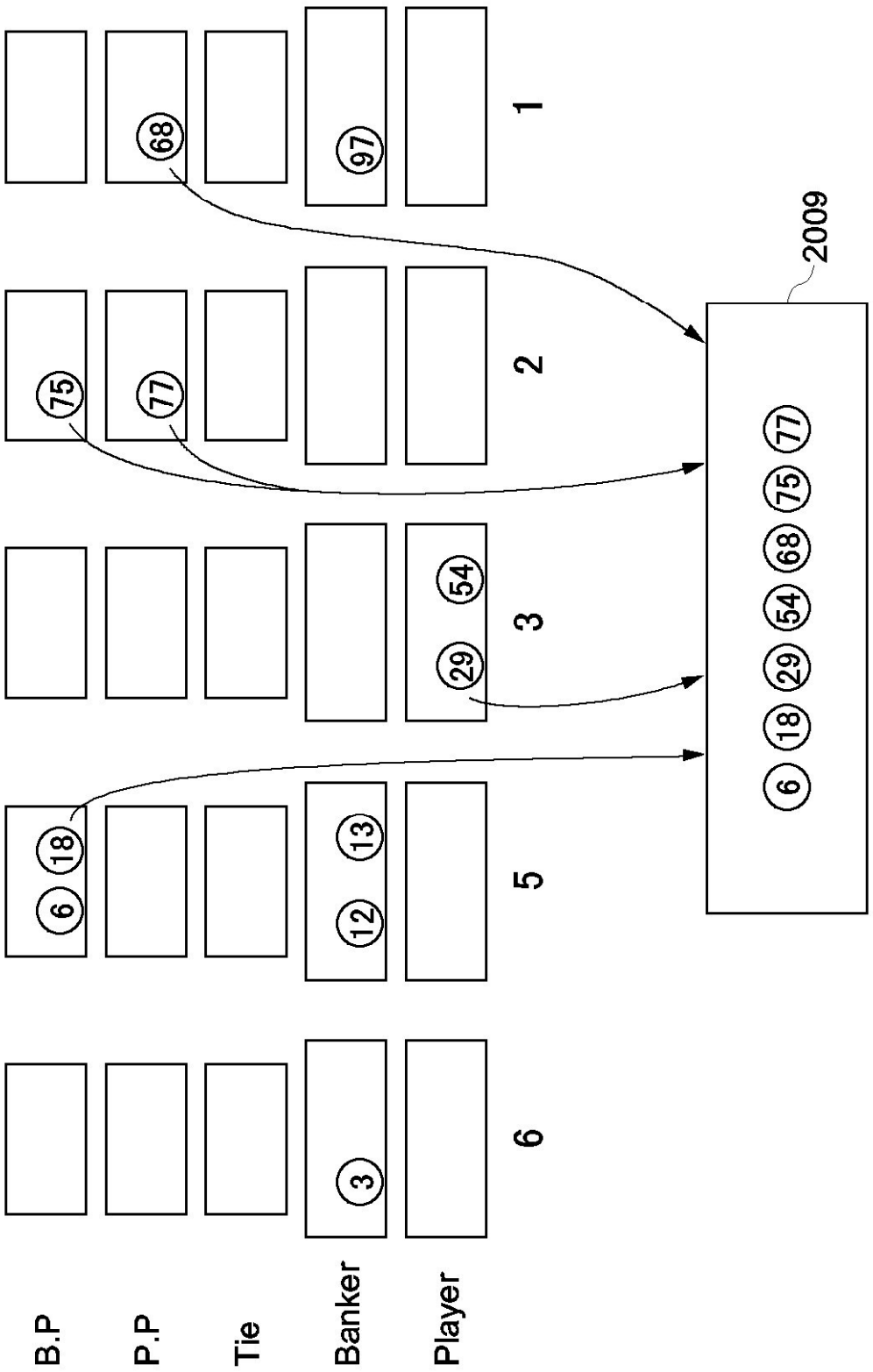
B.P
P.P
Tie
Banker
Player
1
2
3
5
6
97
68
75
77
54
29
13
12
18
6
3
2009
6
18
29
54
68
75
77

FIG.22

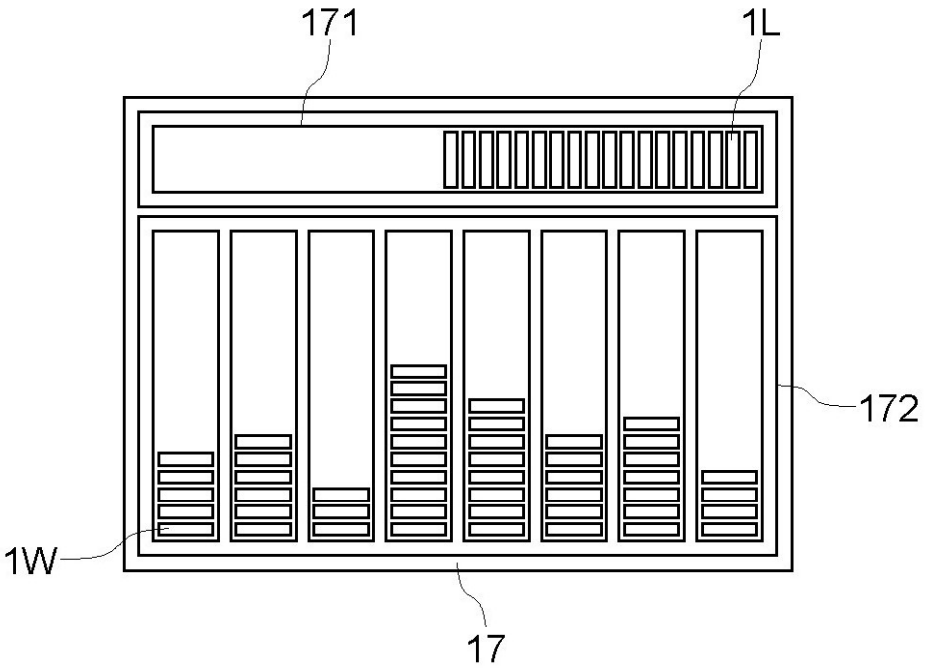

FIG.23A

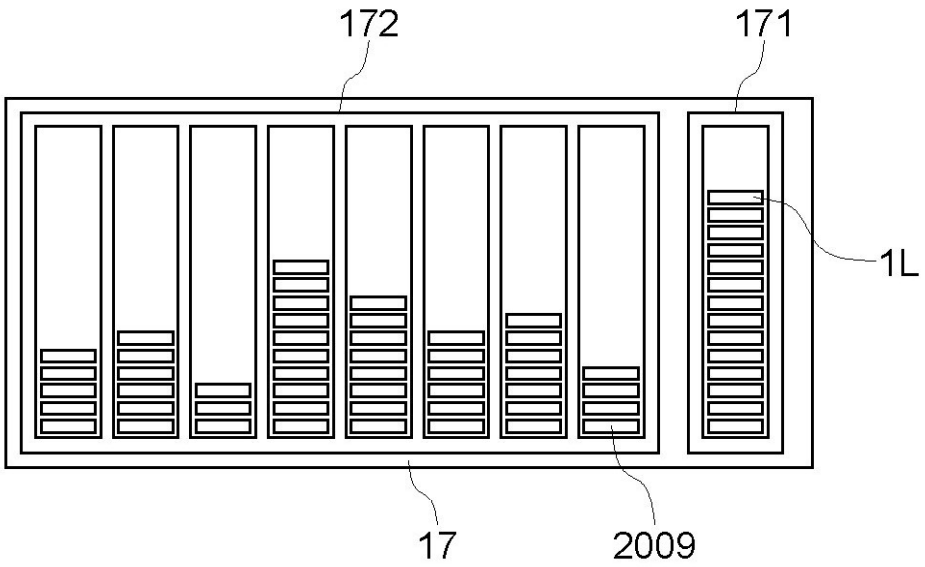

FIG.23B

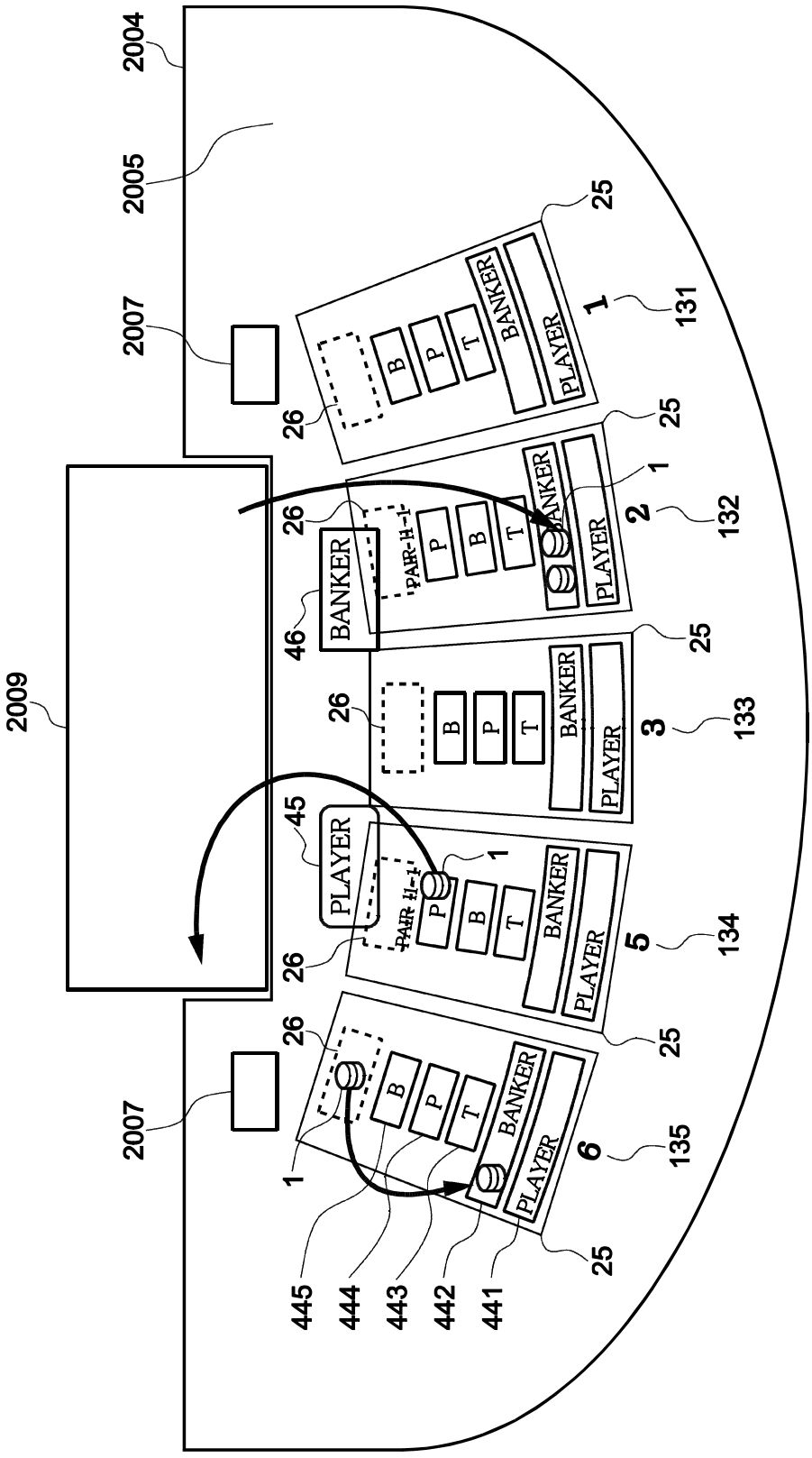
2004
2005
2007
2009
2007
25
26
B
P
T
BANKER
PLAYER
1
131
2
132
3
133
5
134
6
135
46
45
PAIR-H-1
445
444
443
442
441

FIG.24

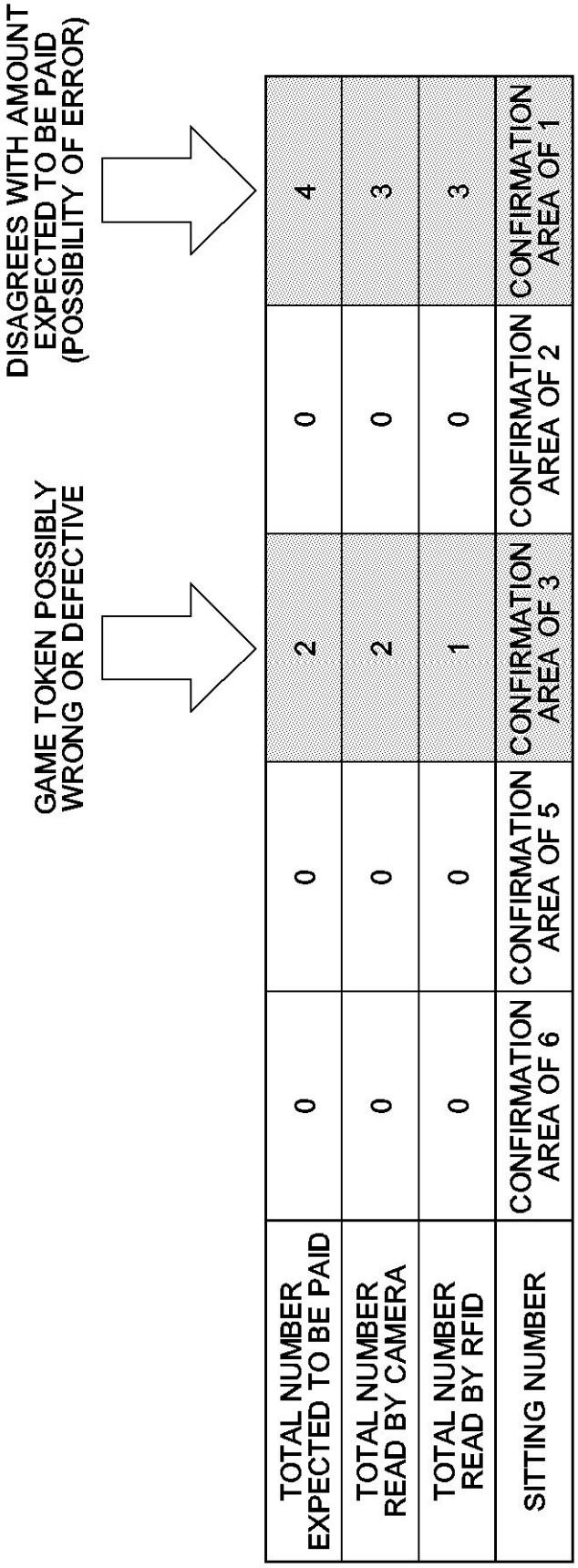
DISAGREES WITH AMOUNT EXPECTED TO BE PAID (POSSIBILITY OF ERROR)
GAME TOKEN POSSIBLY WRONG OR DEFECTIVE
TOTAL NUMBER EXPECTED TO BE PAID
TOTAL NUMBER READ BY CAMERA
TOTAL NUMBER READ BY RFID
SITTING NUMBER
0
0
0
CONFIRMATION AREA OF 6
0
0
0
CONFIRMATION AREA OF 5
2
2
1
CONFIRMATION AREA OF 3
0
0
0
CONFIRMATION AREA OF 2
4
3
3
CONFIRMATION AREA OF 1

FIG.25

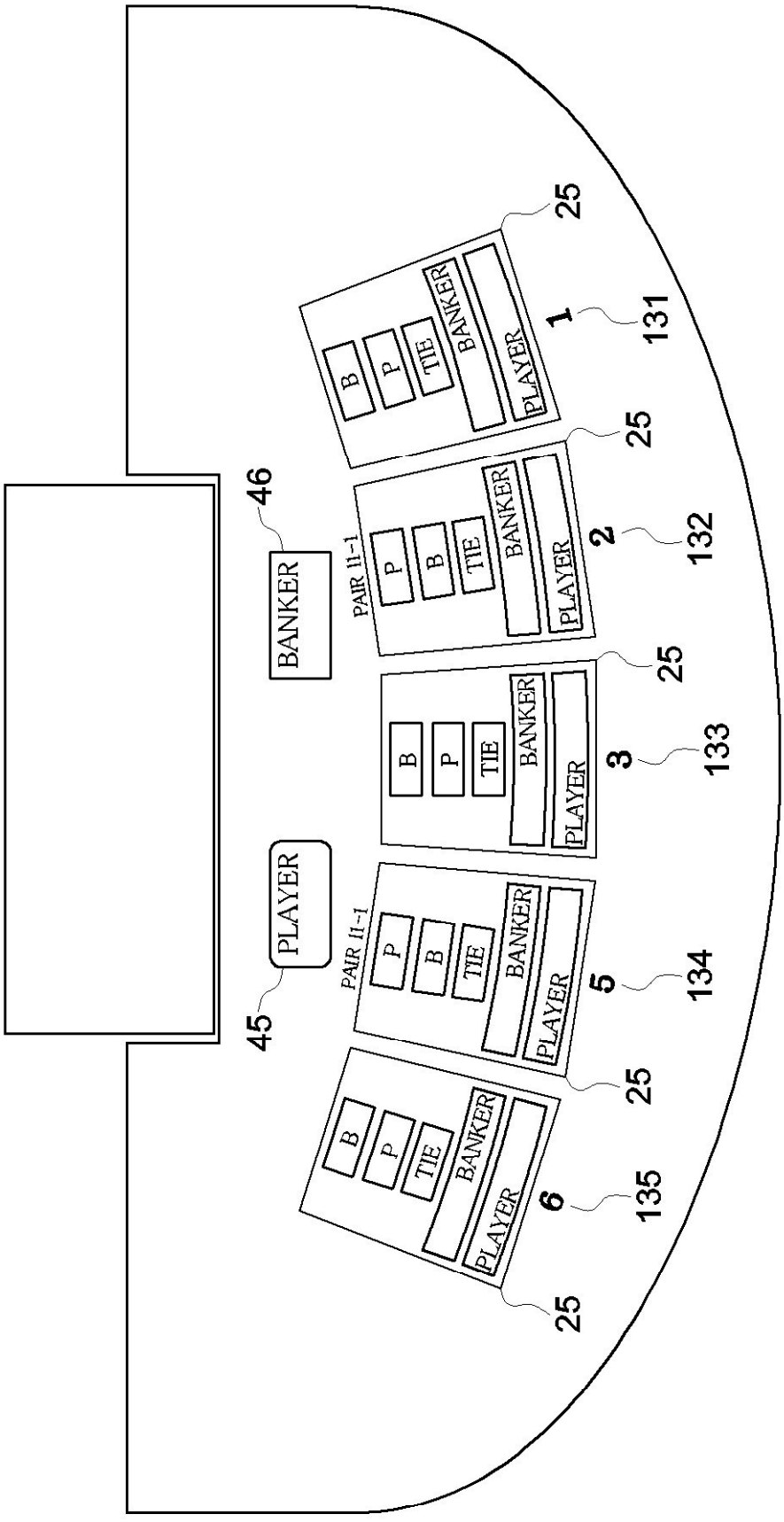
B
P
TIE
BANKER
PLAYER
1
131
25
PAIR 11-1
2
132
46
BANKER
3
133
45
PLAYER
5
134
6
135

FIG.26

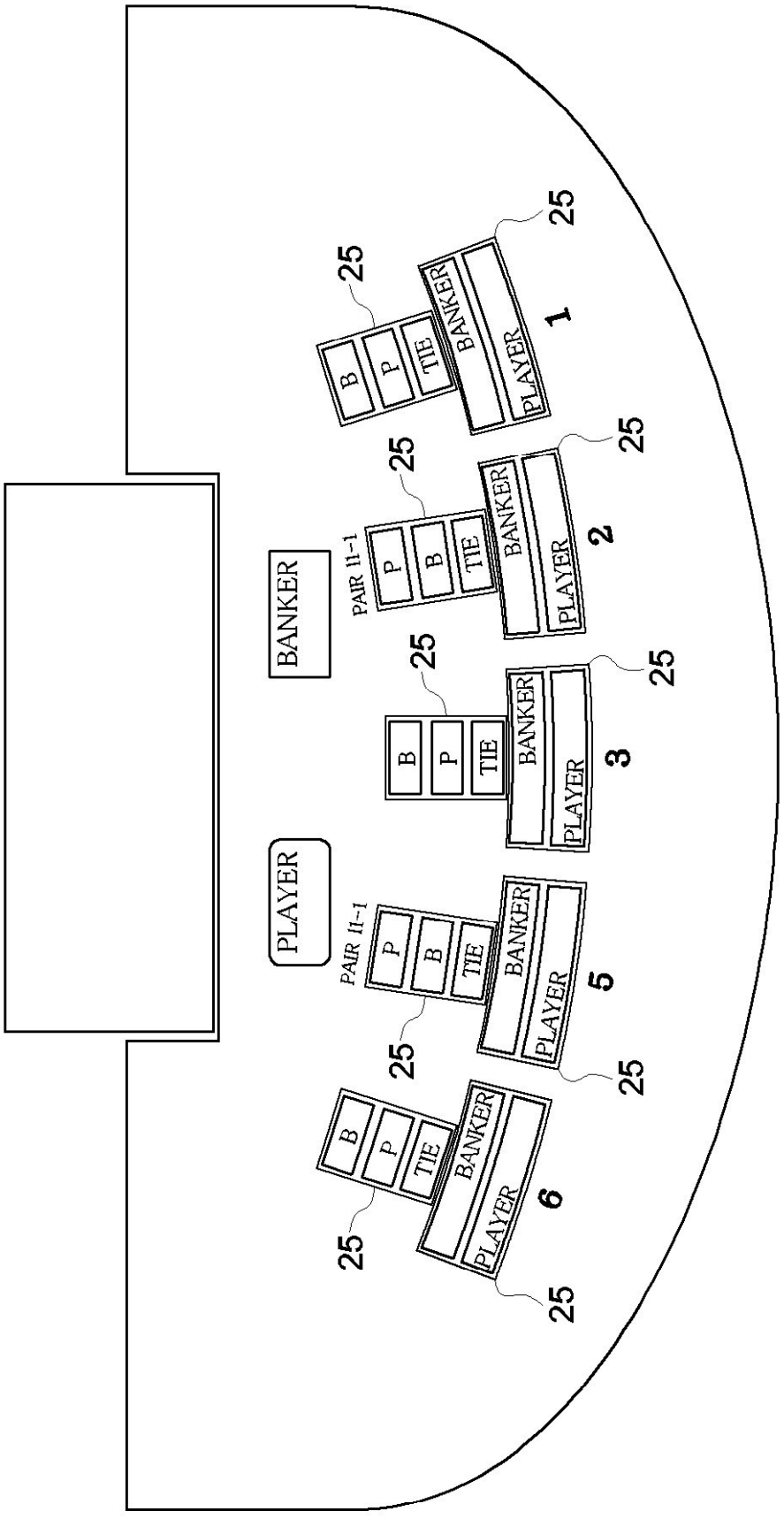

FIG.27

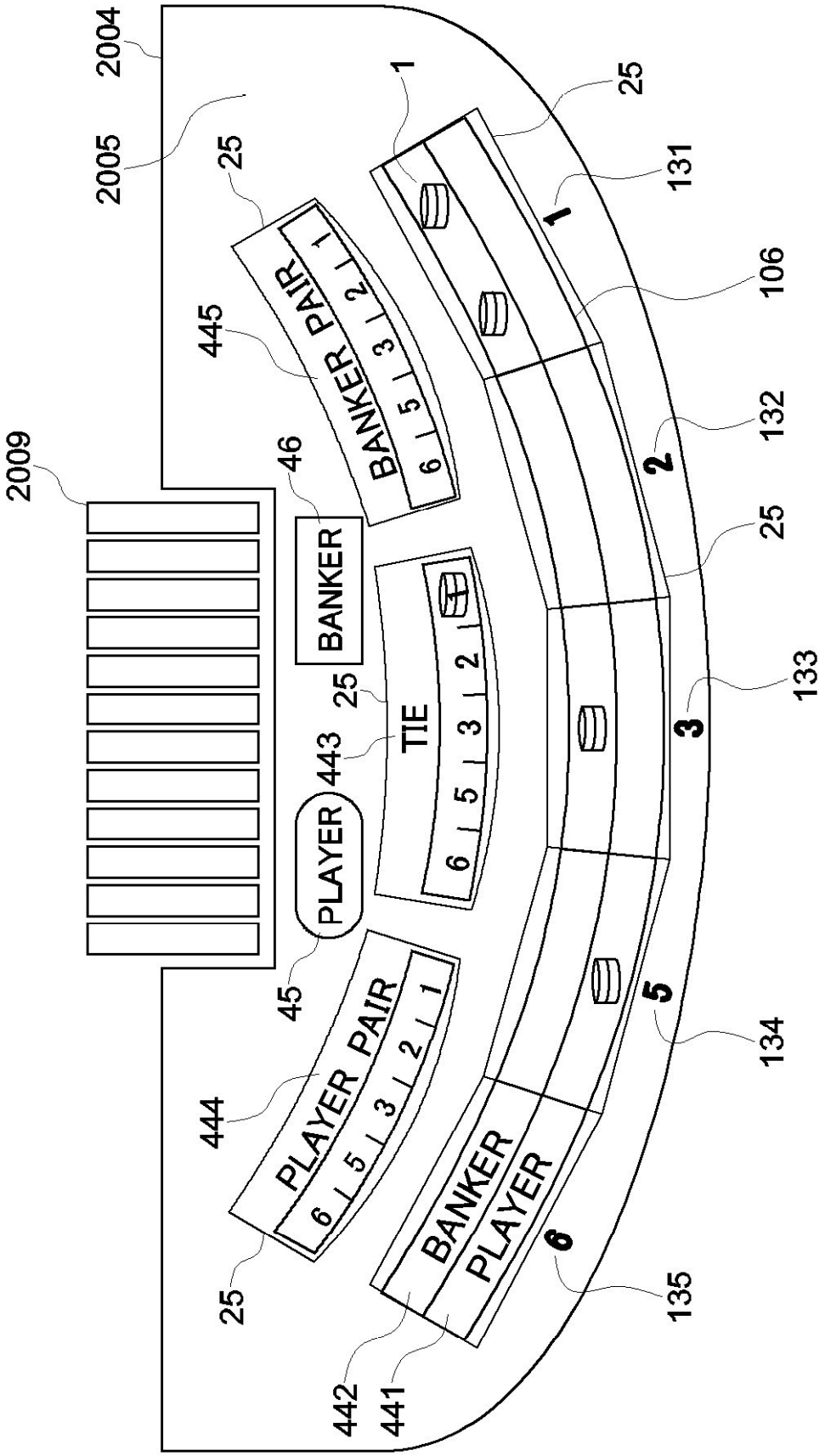
2004
2005
2009
1
25
131
106
132
133
134
135
1
2
3
5
6
BANKER PAIR
6 5 3 2 1
445
46
BANKER
25
TIE
6 5 3 2 1
443
PLAYER
45
PLAYER PAIR
6 5 3 2 1
444
25
BANKER
PLAYER
442
441

FIG.28

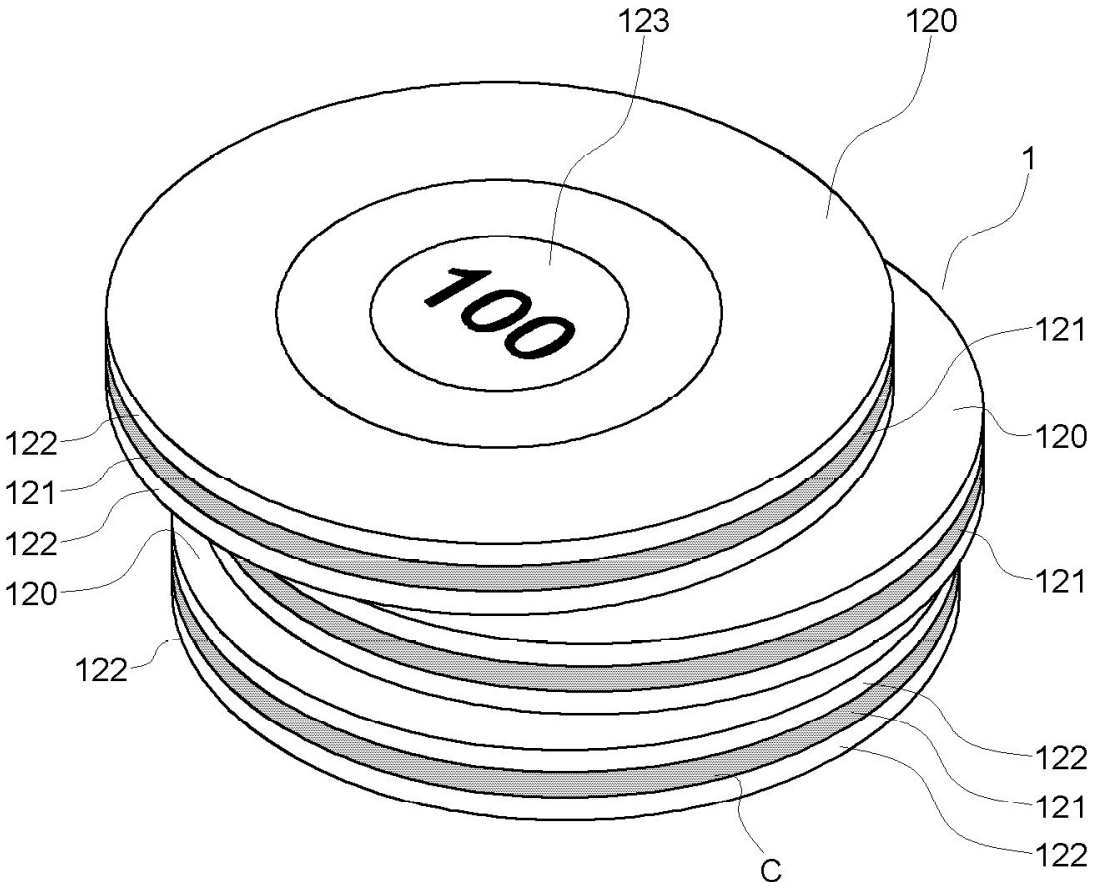

FIG.29

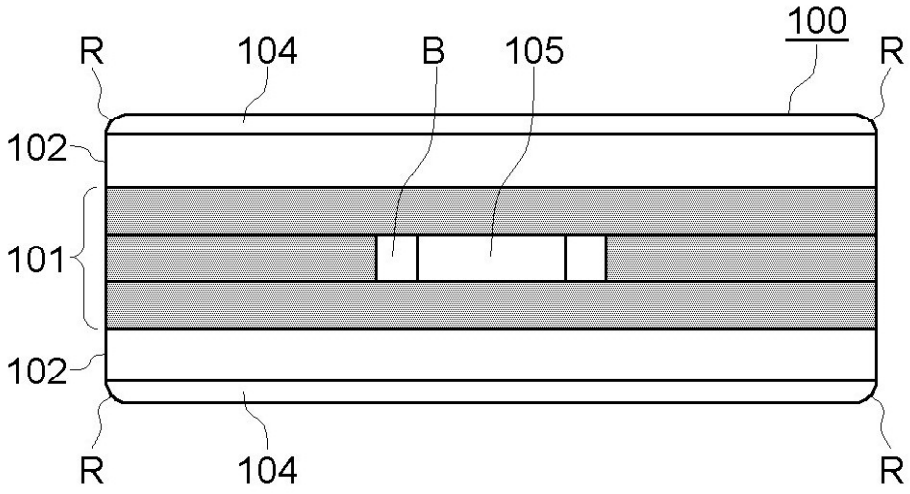

FIG.30

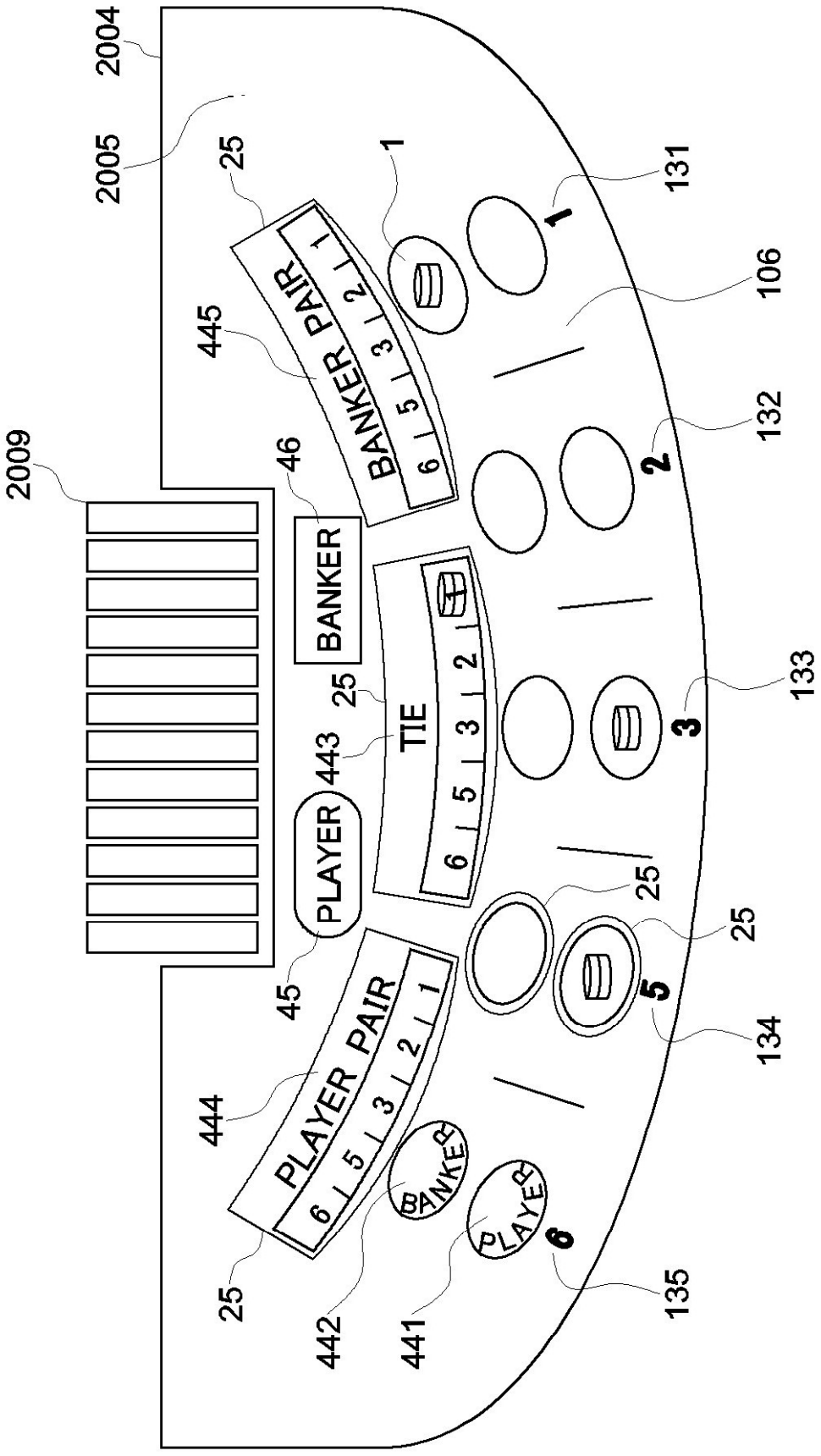
2004
2005
2009
25
1
131
445
BANKER PAIR
6 5 3 2 1
106
46
BANKER
132
2
25
TIE
443
6 5 3 2 1
133
3
PLAYER
45
25
25
5
134
444
PLAYER PAIR
6 5 3 2 1
BANKER
PLAYER
6
25
442
441
135

FIG.31