(12) INTERNATIONAL APPLICATION PUBLISHED UNDER THE PATENT COOPERATION TREATY (PCT)

(19) World Intellectual Property Organization
International Bureau

(43) International Publication Date
02 October 2025 (02.10.2025)

WIPO | PCT

(10) International Publication Number
WO 2025/207728 A1

(51) International Patent Classification:
H01L 21/687 (2006.01) *C23C 14/50* (2006.01)
C23C 16/458 (2006.01)

(21) International Application Number:
PCT/US2025/021480

(22) International Filing Date:
26 March 2025 (26.03.2025)

(25) Filing Language: English

(26) Publication Language: English

(30) Priority Data:
18/619,075 27 March 2024 (27.03.2024) US

(71) Applicant: **APPLIED MATERIALS, INC.** [US/US]; 3050 Bowers Avenue, Santa Clara, California 95054 (US).

(72) Inventors: **ALAYAVALLI, Kaushik**; c/o Applied Materials, Inc., Law Dept., M/S 1269, 3050 Bowers Avenue, Santa Clara, California 95054 (US). **GURURAJ, Sumanth Kurudi**; c/o Applied Materials India Private Limited, Unit 5, 3rd Fl., Explorer Bldg., Whitefield Rd., 560066 Bangalore (IN). **SOMANAHALLI MALLESHAPPA, Chethan**; c/o Applied Materials India Private Limited, Unit 5, 3rd Fl., Explorer Bldg., Whitefield Rd., 560066 Bangalore (IN). **BASAVARAJAIAH SOMASHEKAR, Vishwas**; c/o Applied Materials India Private Limited, Unit 5, 3rd Fl., Explorer Bldg., Whitefield Rd., 560066 Bangalore (IN). **MURALI KUMAR, Pavan Kumar**; c/o Applied Materials India Private Limited, Unit 5, 3rd Fl., Explorer Bldg., Whitefield Rd., 560066 Bangalore (IN). **HATTANGADI, Amit**; c/o Applied Materials India Private Limited, Unit 5, 3rd Fl., Explorer Bldg., Whitefield Rd., 560066 Bangalore (IN). **RAJENDRAN, Hari Prasath**; c/o Applied Materials India Private Limited, Unit 5, 3rd Fl., Explorer Bldg., Whitefield Rd., 560066 Bangalore (IN).

(74) Agent: **DOUGHERTY, Chad M.** et al.; PATTERSON + SHERIDAN LLP, 24 Greenway Plaza, Suite 1600, Houston, Texas 77046 (US).

(81) Designated States *(unless otherwise indicated, for every kind of national protection available)*: AE, AG, AL, AM, AO, AT, AU, AZ, BA, BB, BG, BH, BN, BR, BW, BY, BZ, CA, CH, CL, CN, CO, CR, CU, CV, CZ, DE, DJ, DK, DM, DO, DZ, EC, EE, EG, ES, FI, GB, GD, GE, GH, GM, GT, HN, HR, HU, ID, IL, IN, IQ, IR, IS, IT, JM, JO, JP, KE, KG, KH, KN, KP, KR, KW, KZ, LA, LC, LK, LR, LS, LU, LY, MA, MD, MG, MK, MN, MU, MW, MX, MY, MZ, NA, NG, NI, NO, NZ, OM, PA, PE, PG, PH, PL, PT, QA, RO, RS, RU, RW, SA, SC, SD, SE, SG, SK, SL, ST, SV, SY, TH,

(54) Title: LIFT PIN SYSTEMS AND METHODS

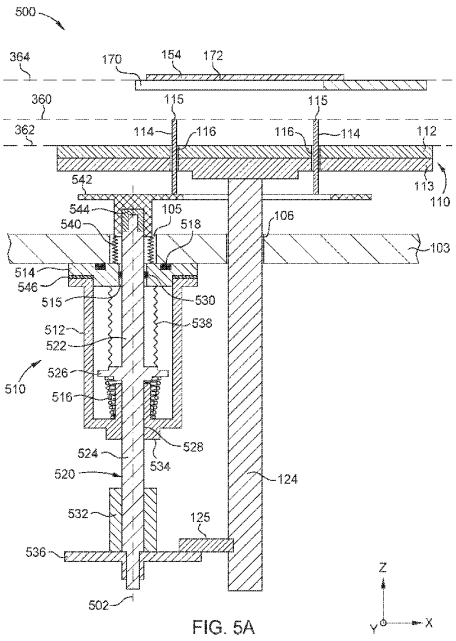

FIG. 5A

(57) Abstract: A substrate support assembly includes a substrate support that is moveable by a shaft between a raised position and a lowered position below the raised position. A lift pin is disposed in a hole through the substrate support, and is movable vertically with respect to the substrate support. In one implementation, the lift pin includes a shaft with a longitudinal rib. In another implementation, a lift pin system includes a seal member in a lift pin housing that forms a seal against the lift pin. In another implementation, a lift pin system is adjustable to change a distance of an end of the lift pin from a datum. In another implementation, a lift pin system includes a hoop plate to which the lift pin is coupled. The hoop plate is coupled to an actuating plate via a plunger. The actuating plate is biased against an arm coupled to the shaft.

WO 2025/207728 A1

[Continued on next page]

TJ, TM, TN, TR, TT, TZ, UA, UG, US, UY, UZ, VC, VN, WS, ZA, ZM, ZW.

(84) **Designated States** *(unless otherwise indicated, for every kind of regional protection available)*: ARIPO (BW, CV, GH, GM, KE, LR, LS, MW, MZ, NA, RW, SC, SD, SL, ST, SZ, TZ, UG, ZM, ZW), Eurasian (AM, AZ, BY, KG, KZ, RU, TJ, TM), European (AL, AT, BE, BG, CH, CY, CZ, DE, DK, EE, ES, FI, FR, GB, GR, HR, HU, IE, IS, IT, LT, LU, LV, MC, ME, MK, MT, NL, NO, PL, PT, RO, RS, SE, SI, SK, SM, TR), OAPI (BF, BJ, CF, CG, CI, CM, GA, GN, GQ, GW, KM, ML, MR, NE, SN, TD, TG).

Published:

— *with international search report (Art. 21(3))*