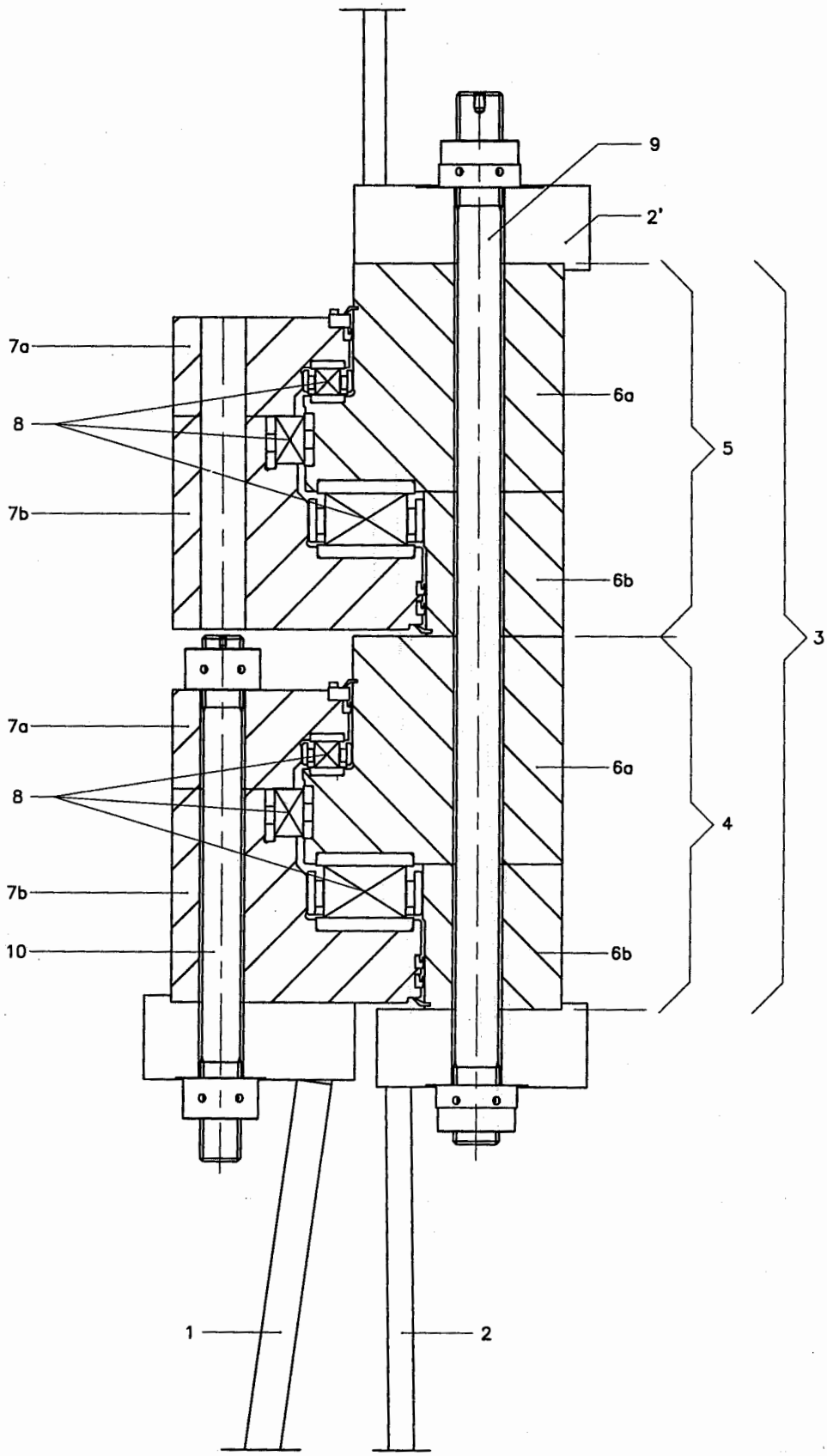

FIGURE 1

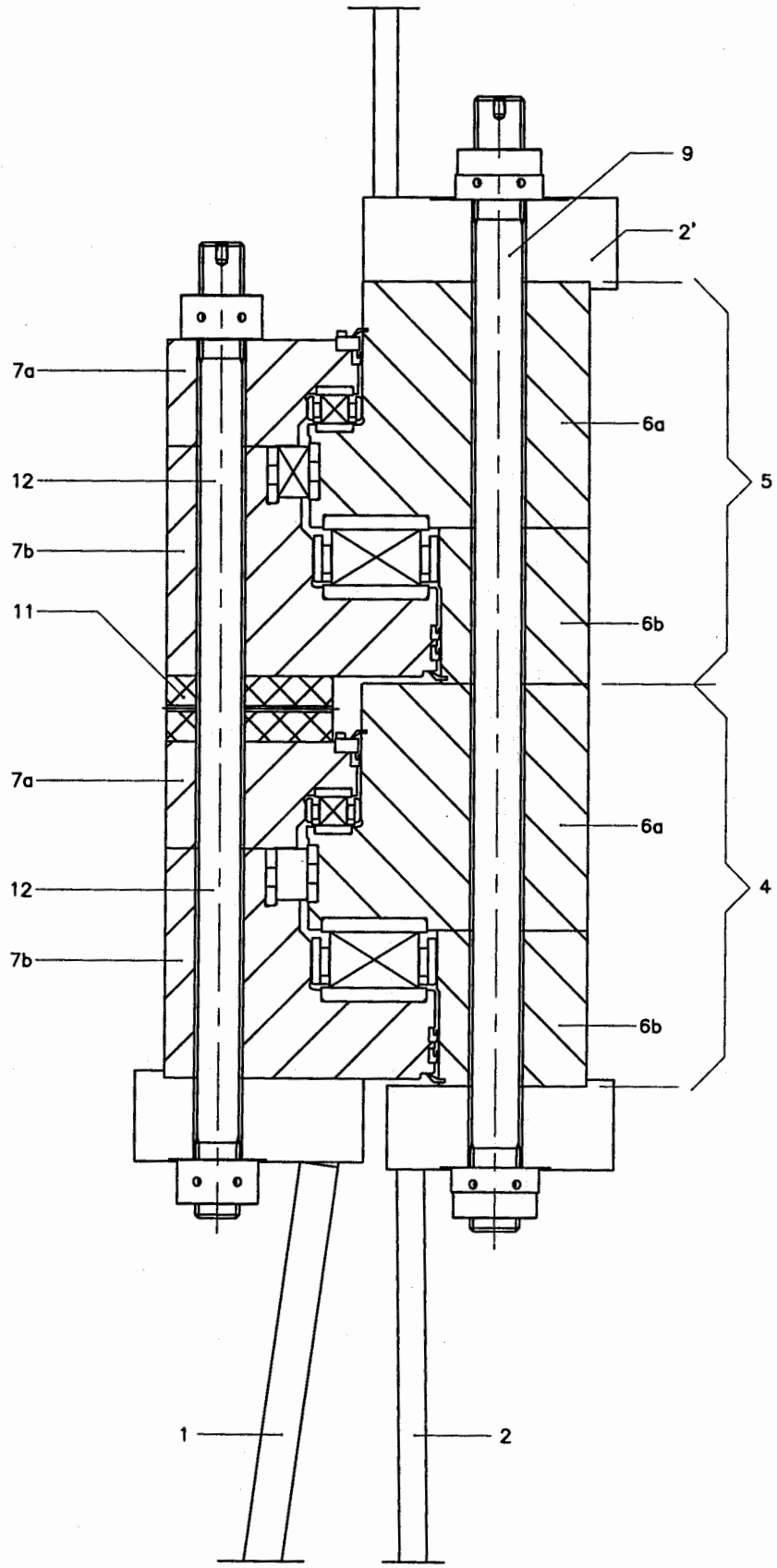

FIGURE 2

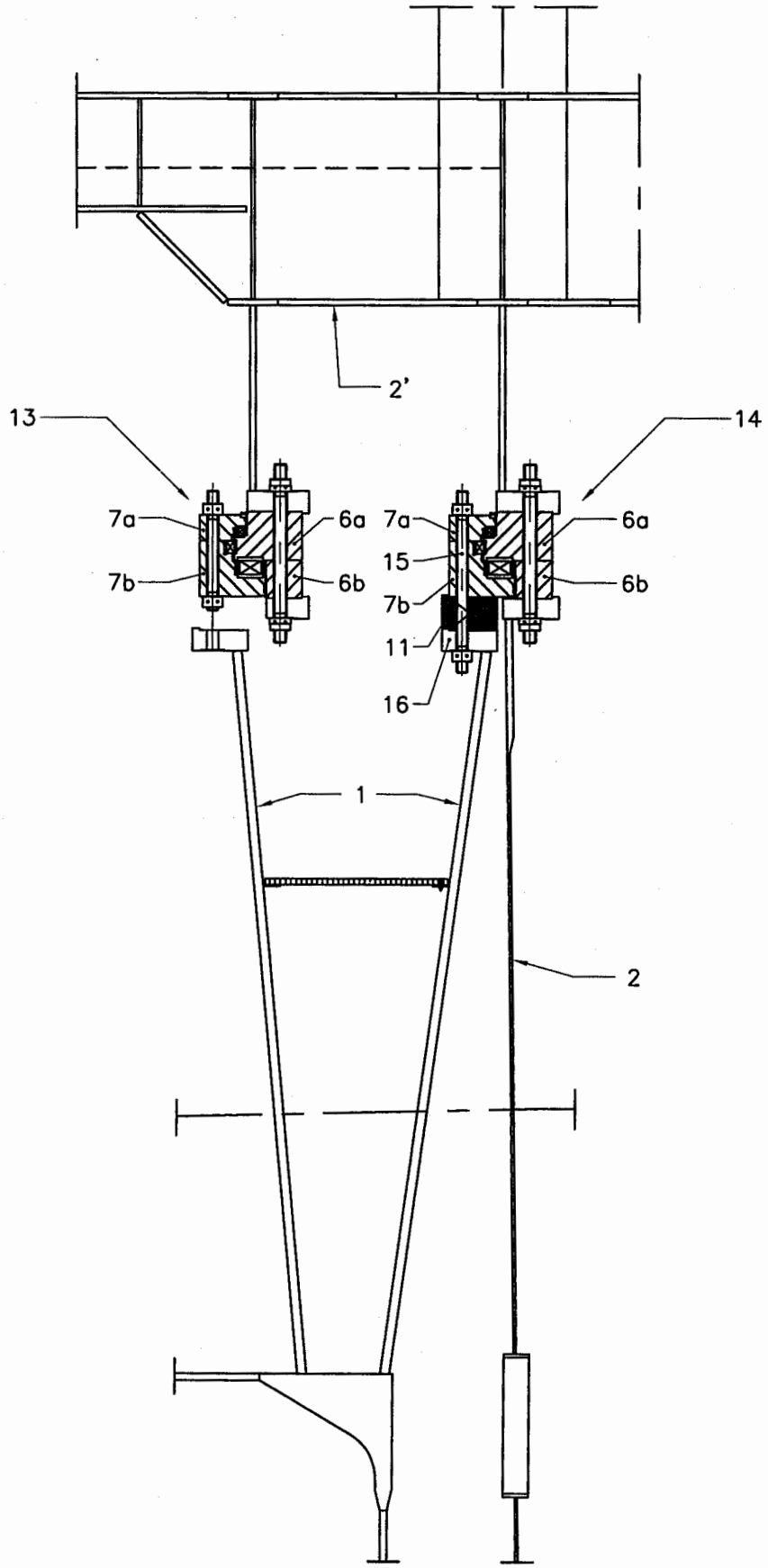

FIGURE 3

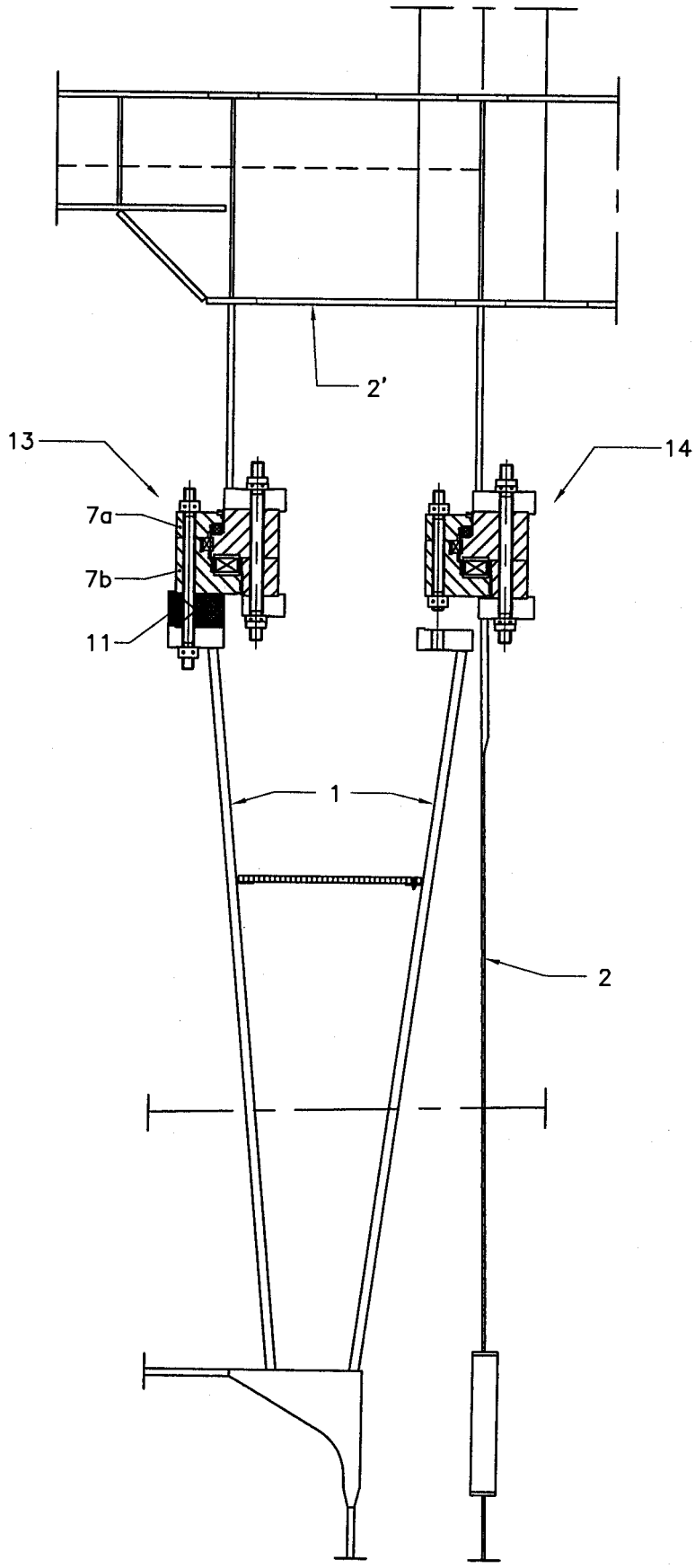

FIGURE 4

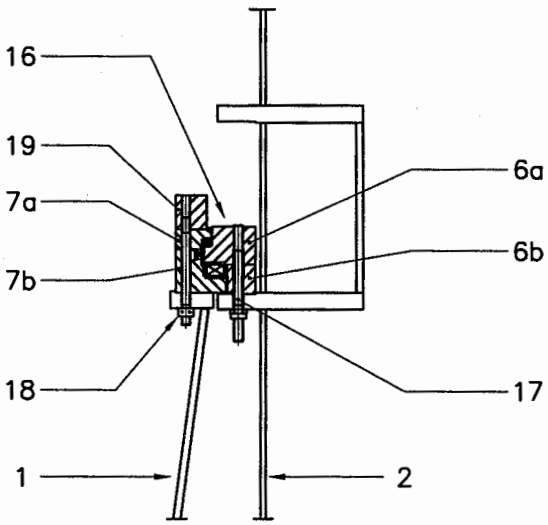

FIGURE 5a

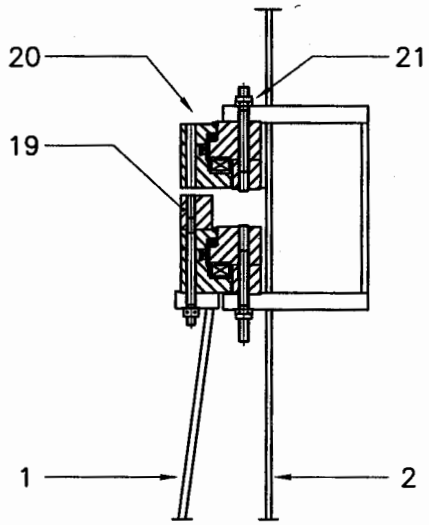

FIGURE 5b

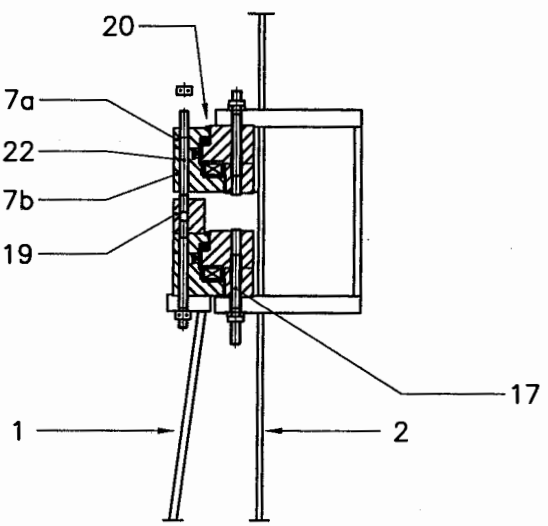

FIGURE 5c

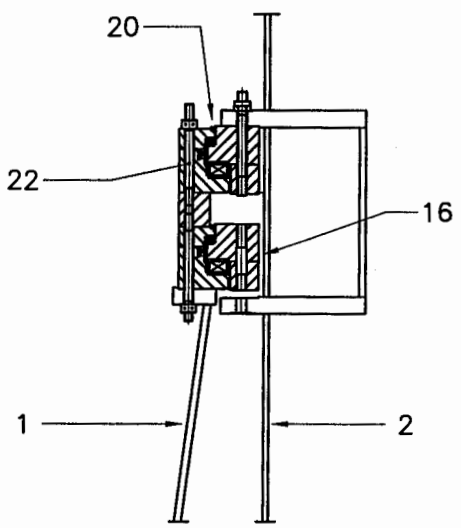

FIGURE 5d

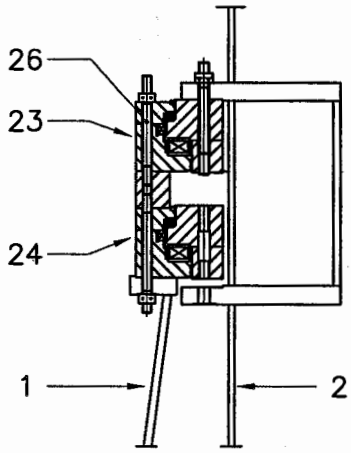

FIGURE 6a

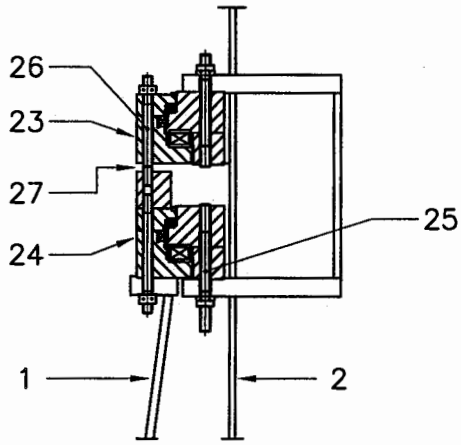

FIGURE 6b

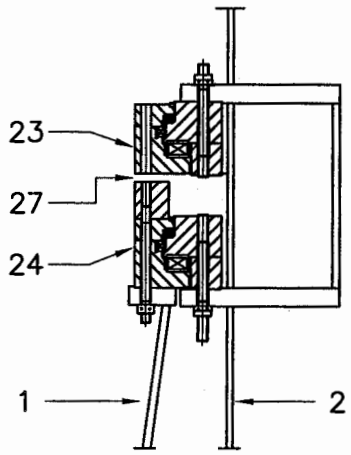

FIGURE 6c

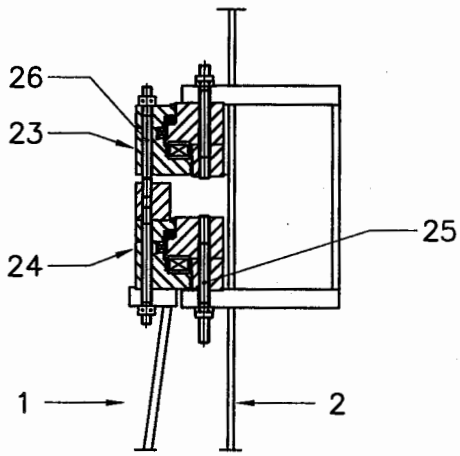

FIGURE 6d

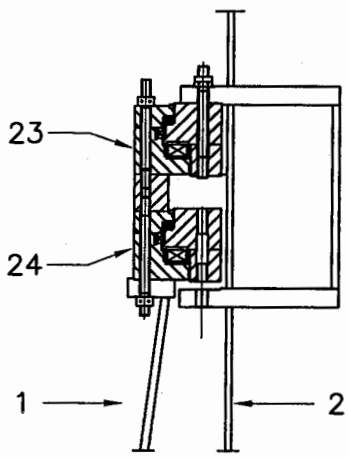

FIGURE 6e

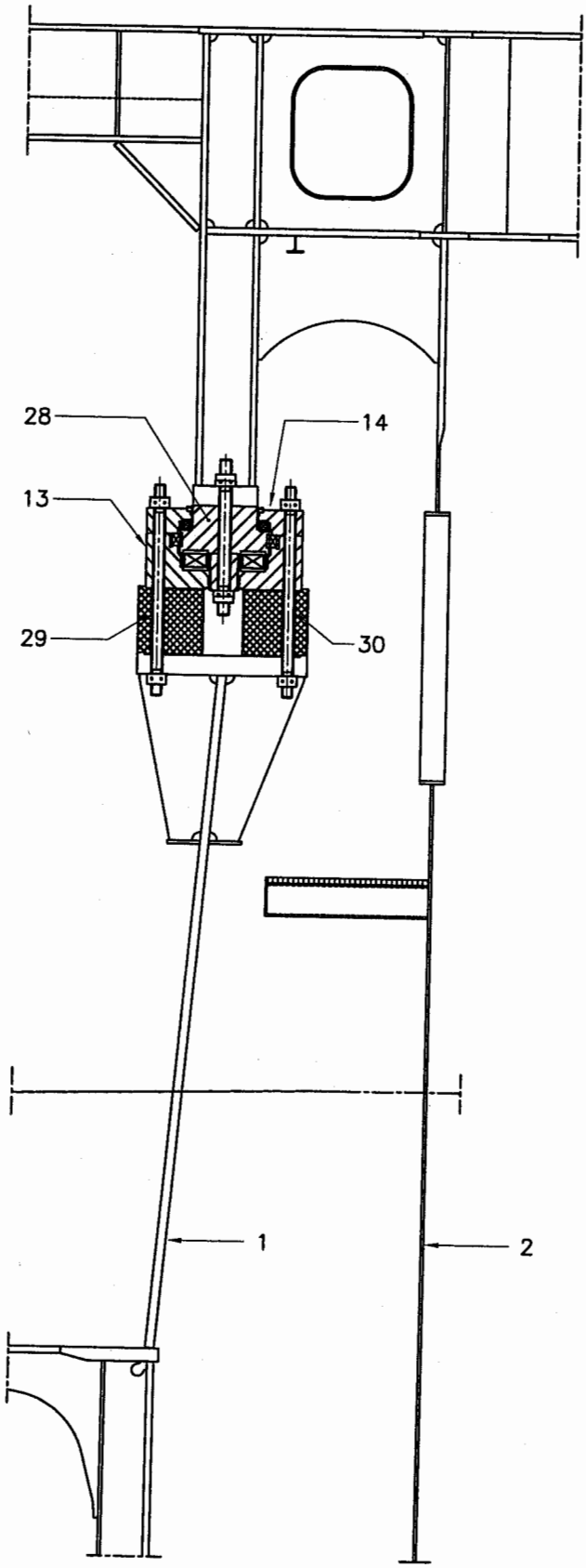

FIGURE 7

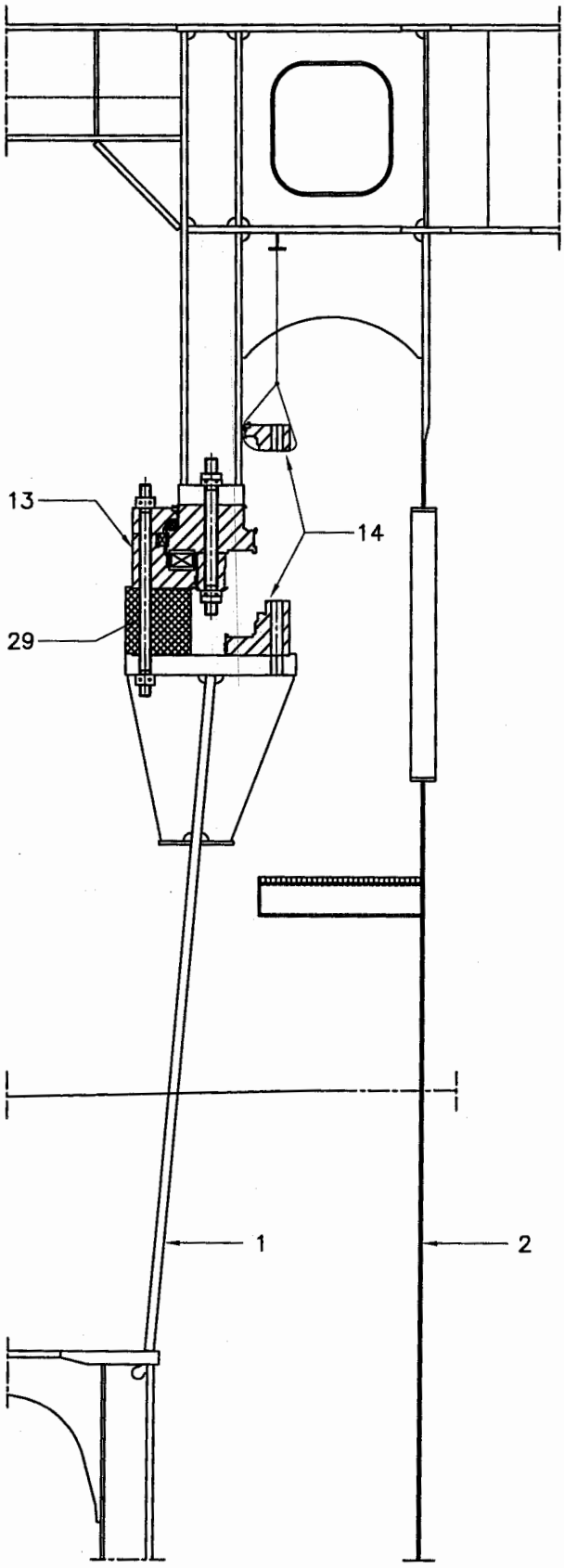

FIGURE 8