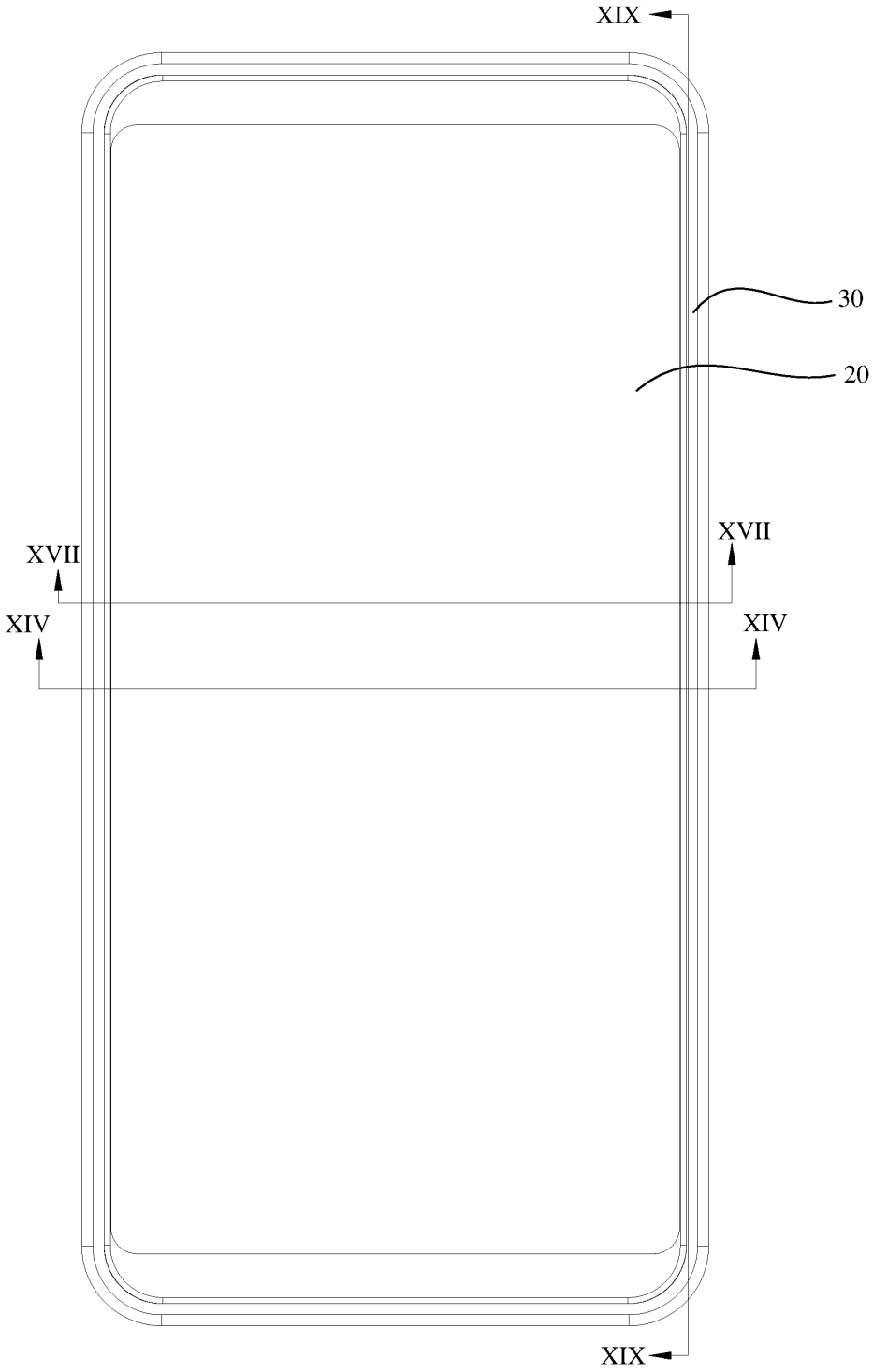

FIG. 1

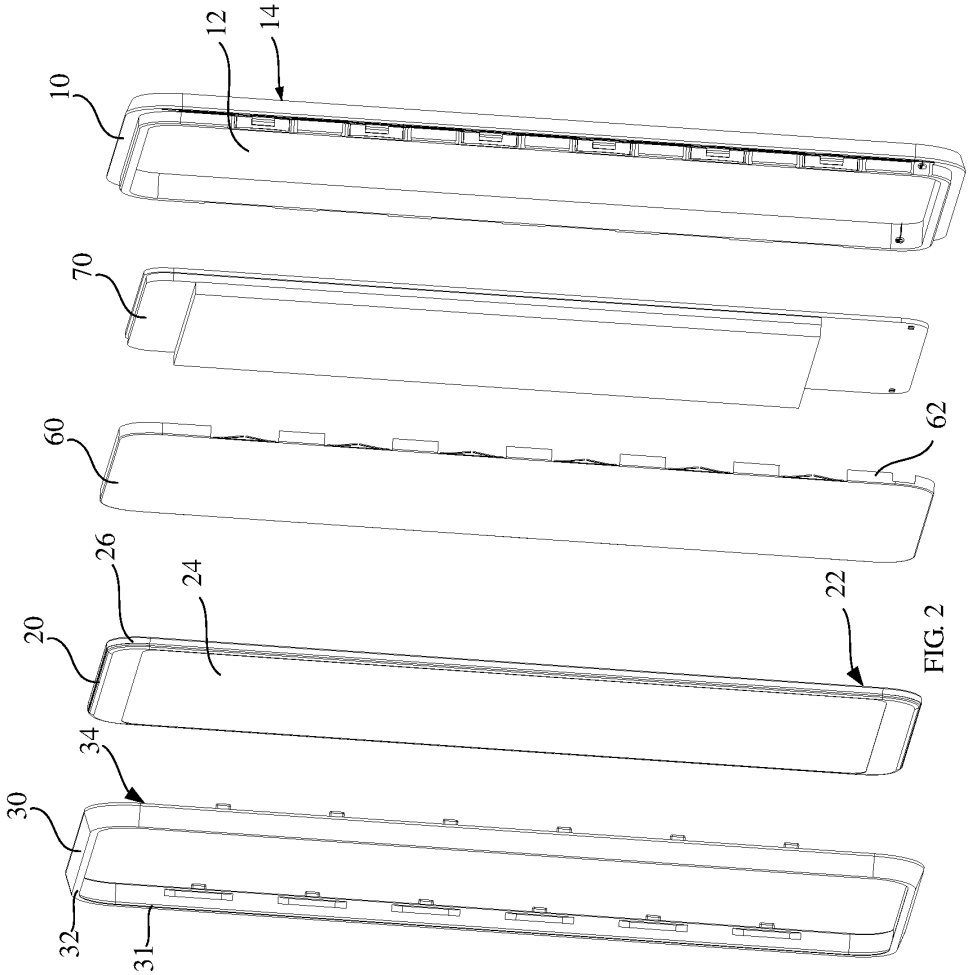

FIG. 2

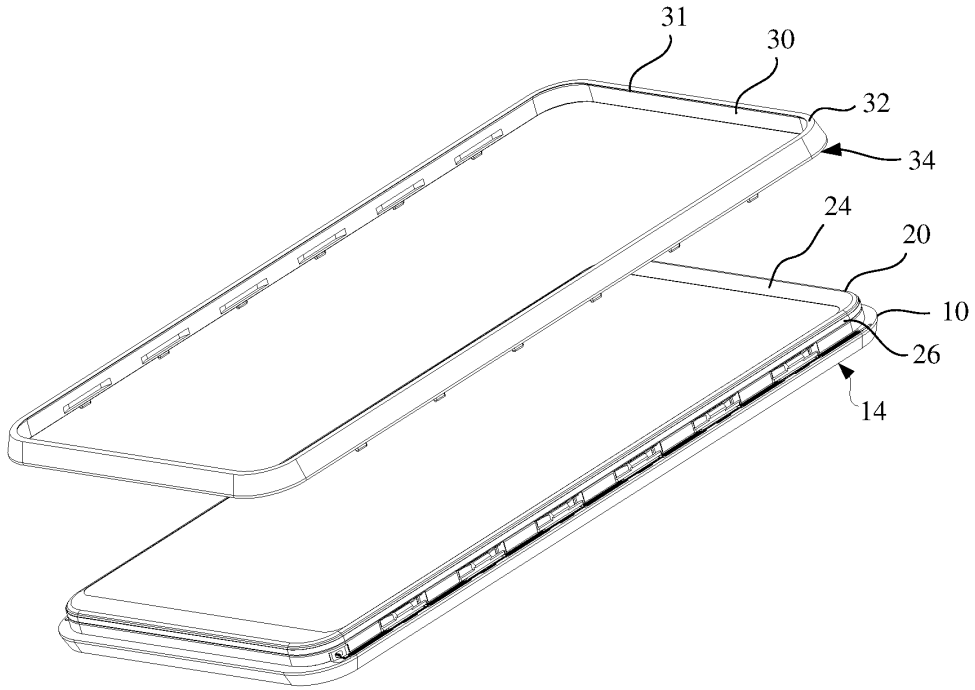

FIG. 3

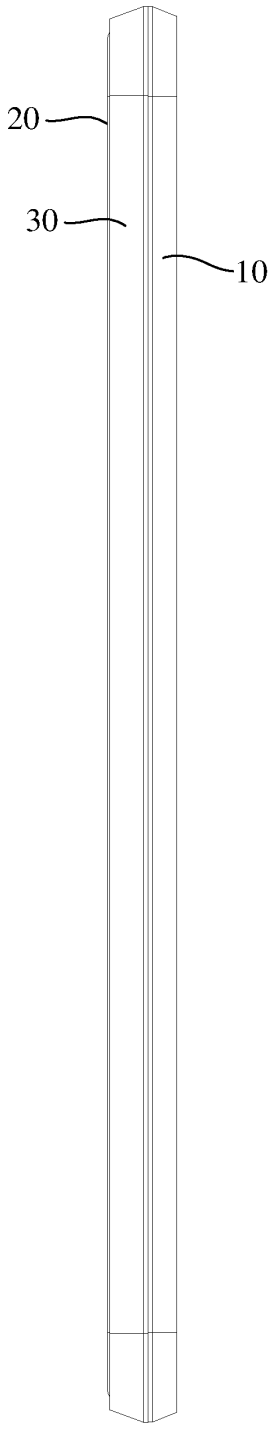

FIG. 4

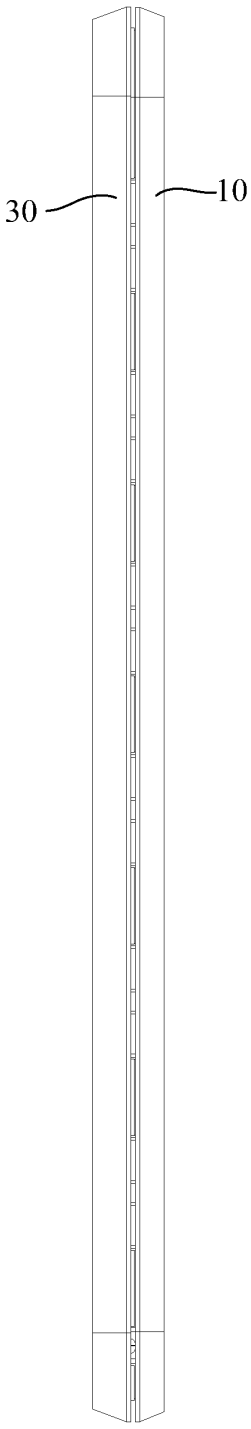

FIG. 5

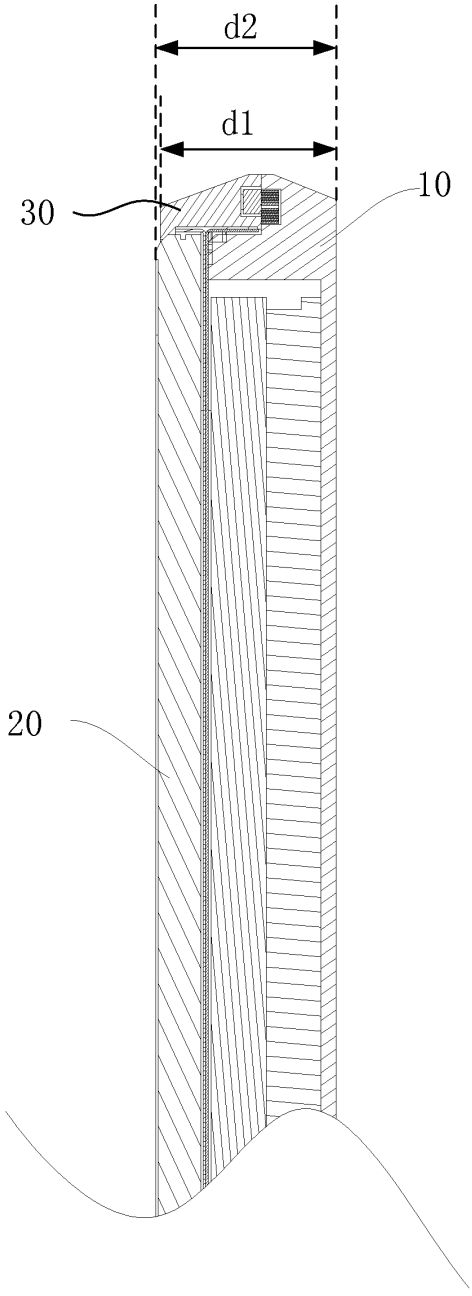

FIG. 6

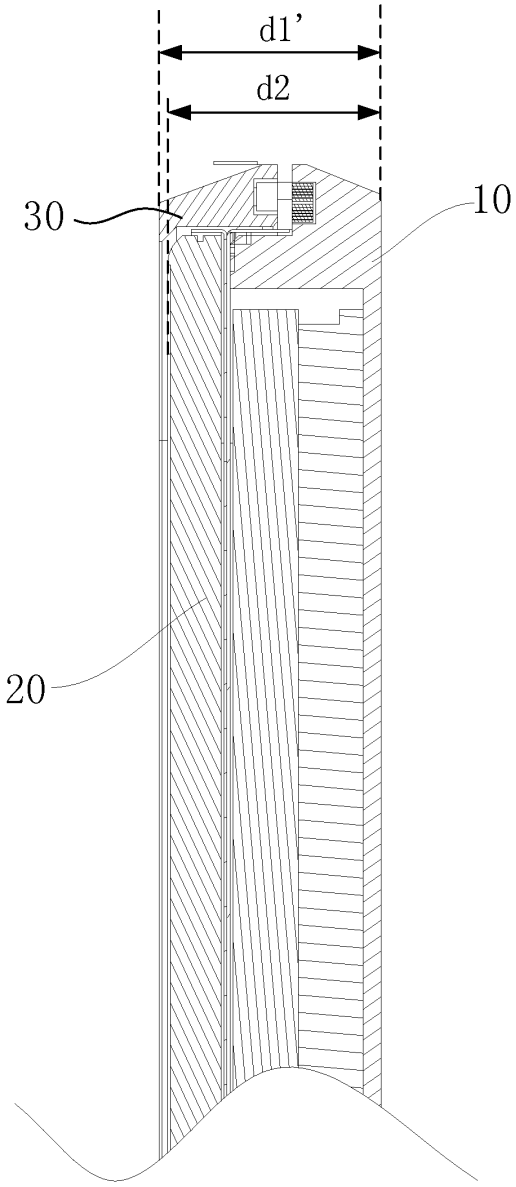

FIG. 7

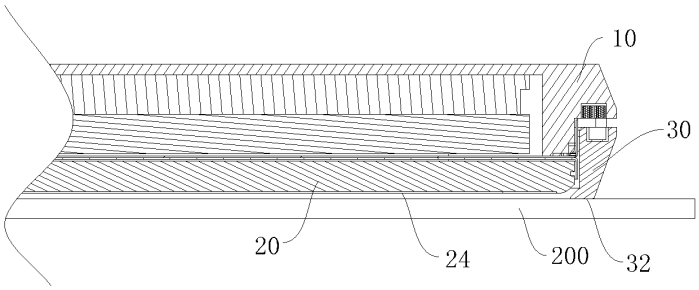

FIG. 8

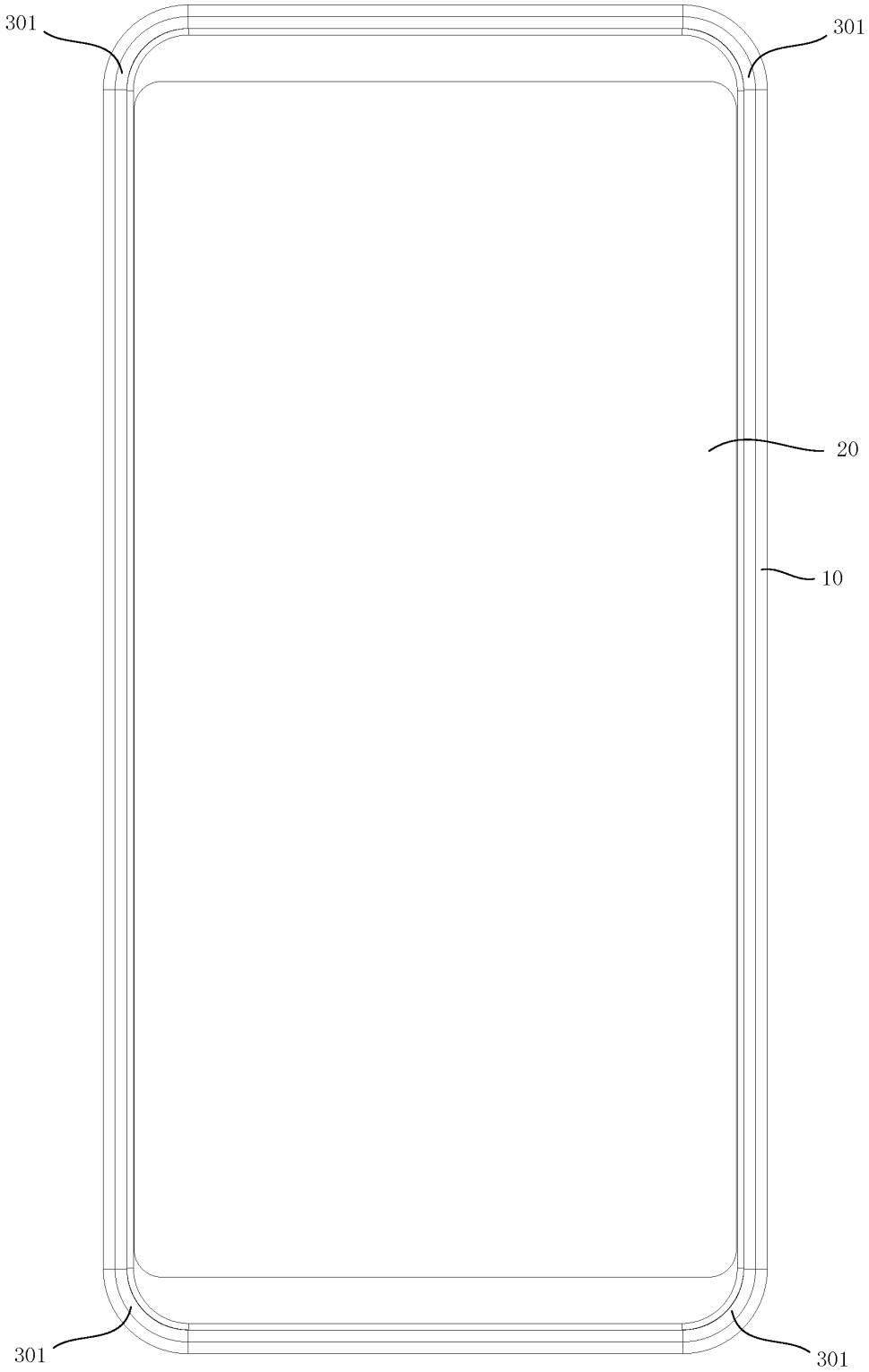

FIG. 9

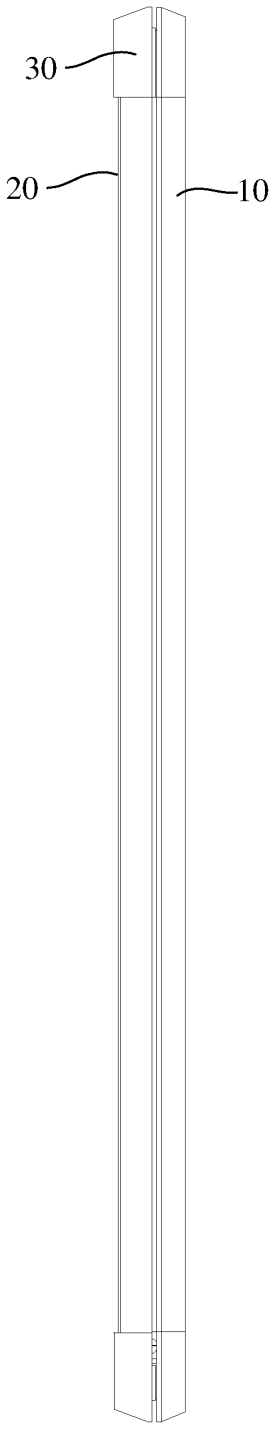

FIG. 10

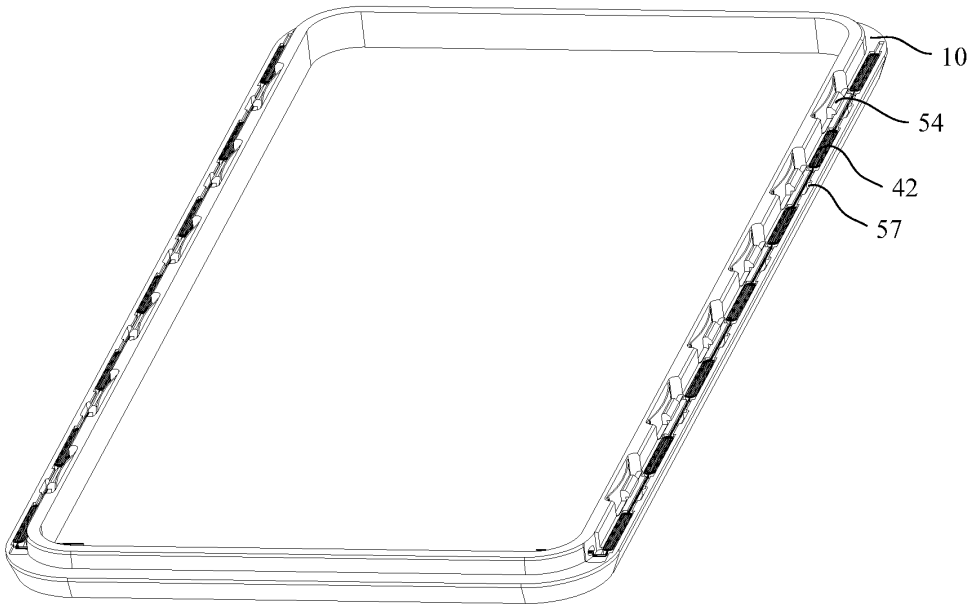

FIG. 11

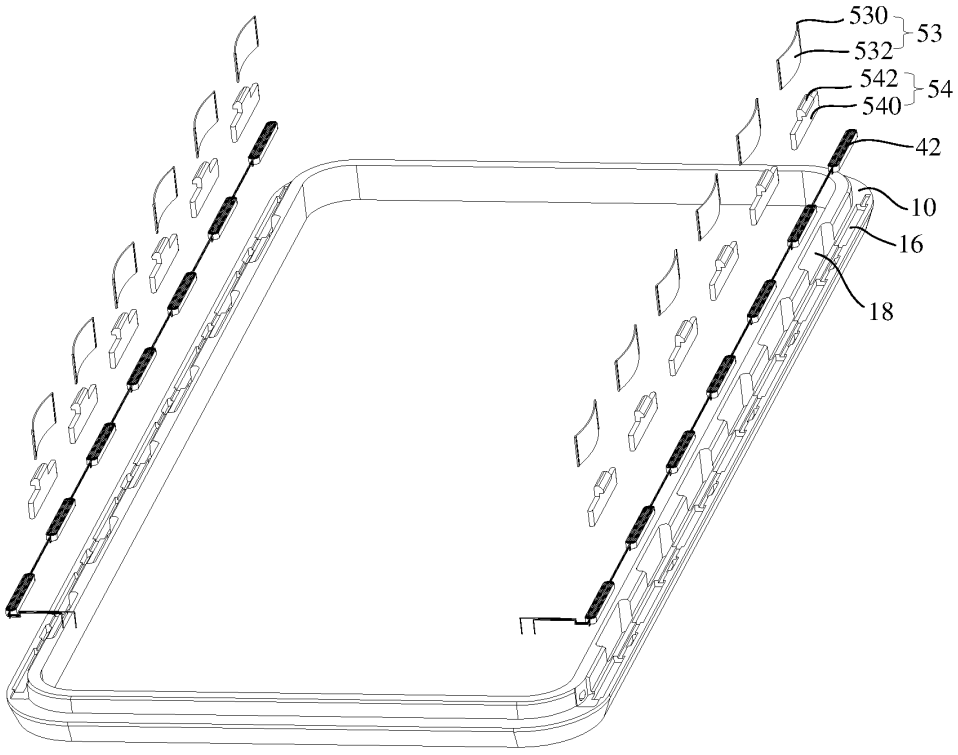

FIG. 12

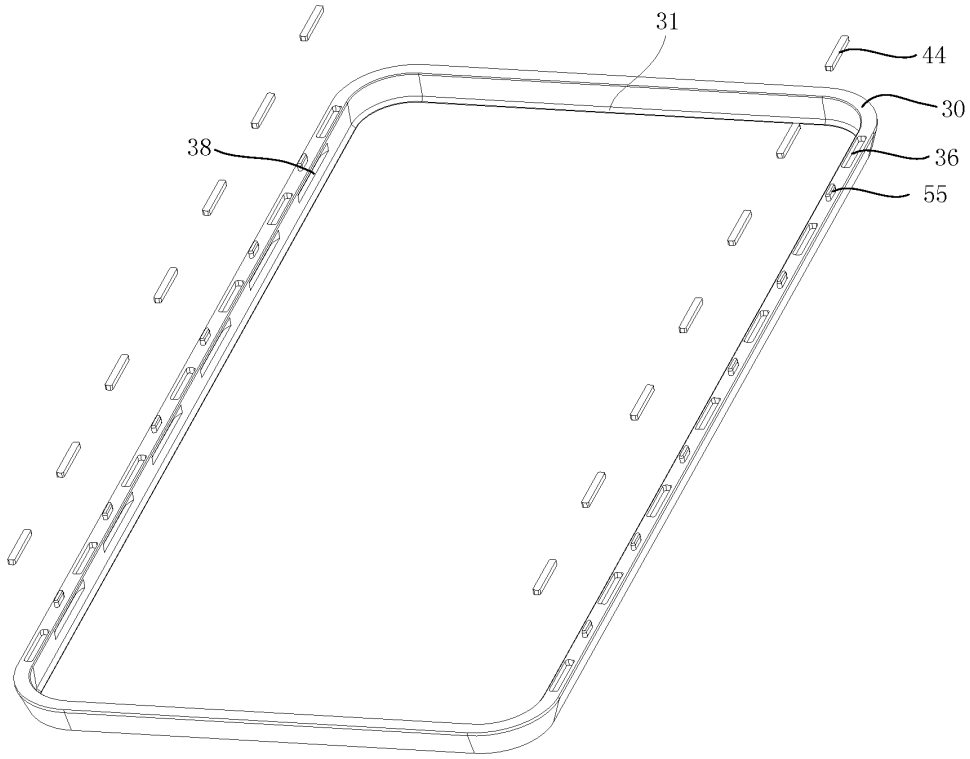

FIG. 13

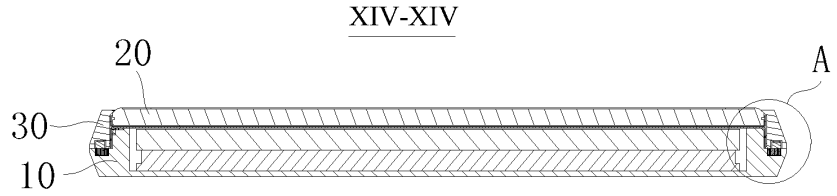

FIG. 14

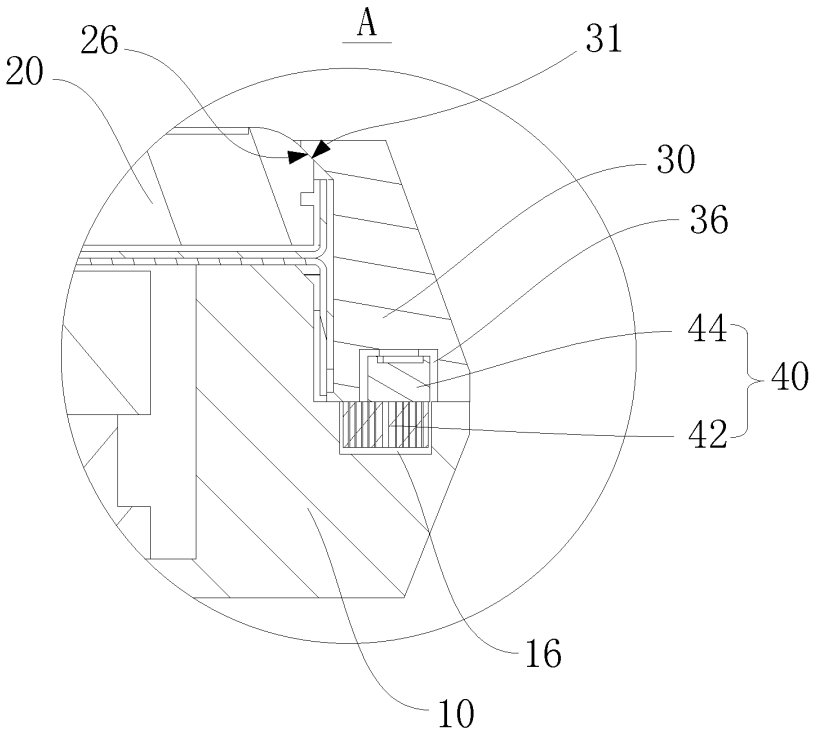

FIG. 15

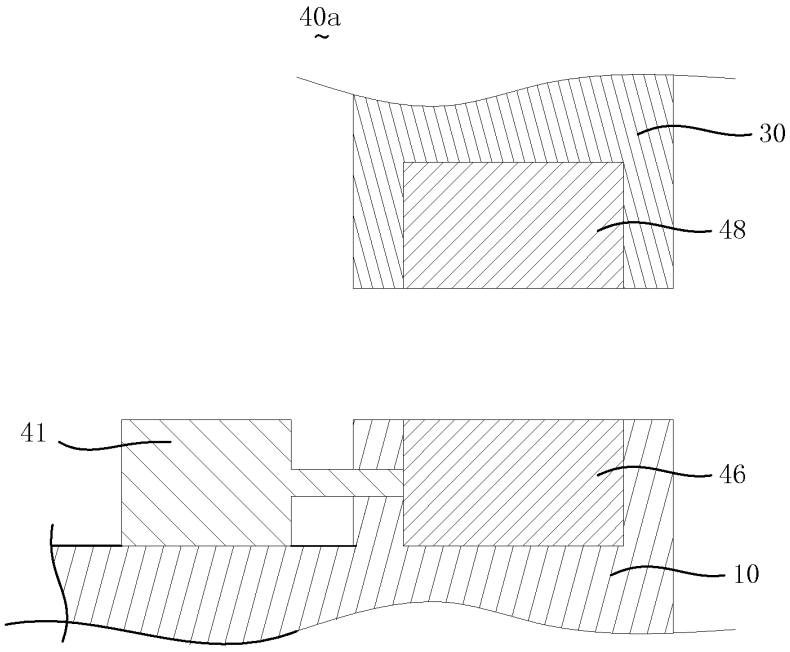

FIG. 16

XVII- XVII

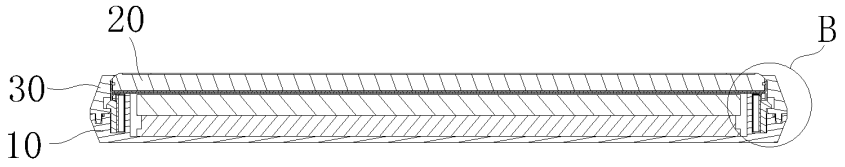

FIG. 17

B

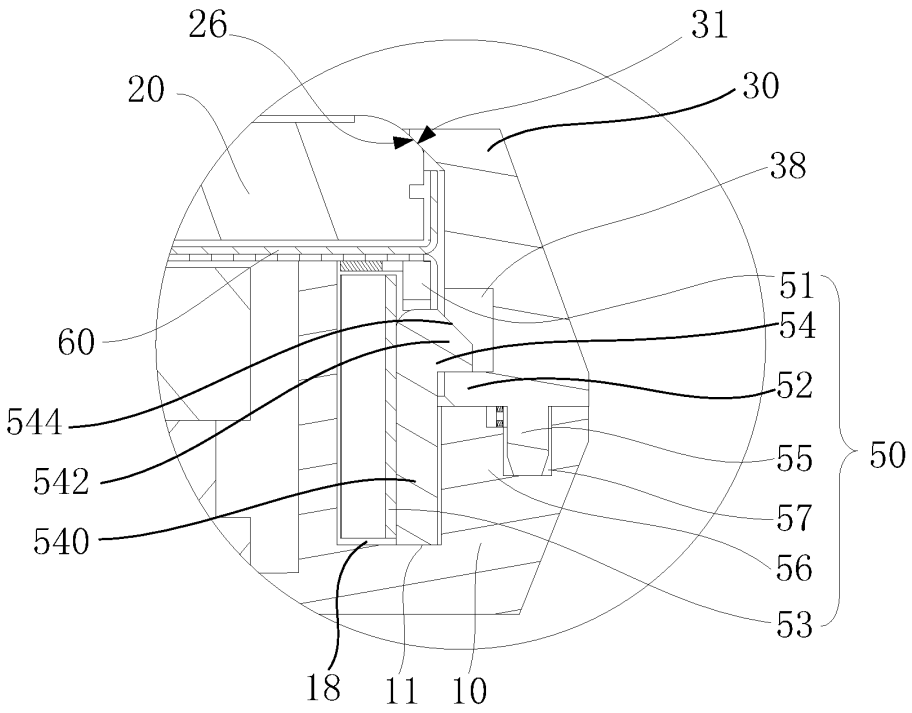

FIG. 18

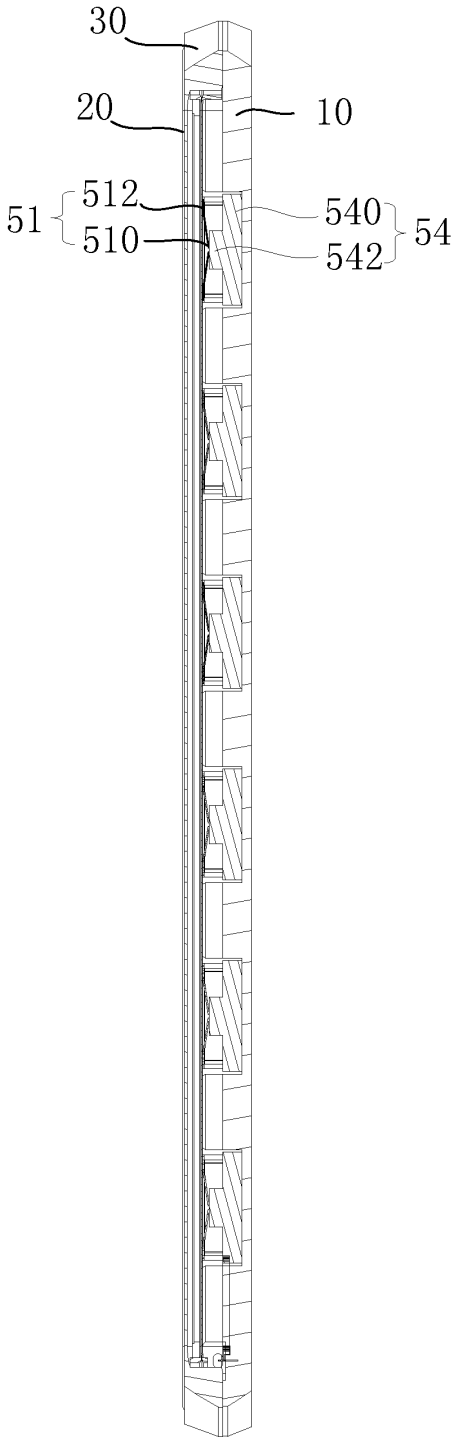

FIG. 19

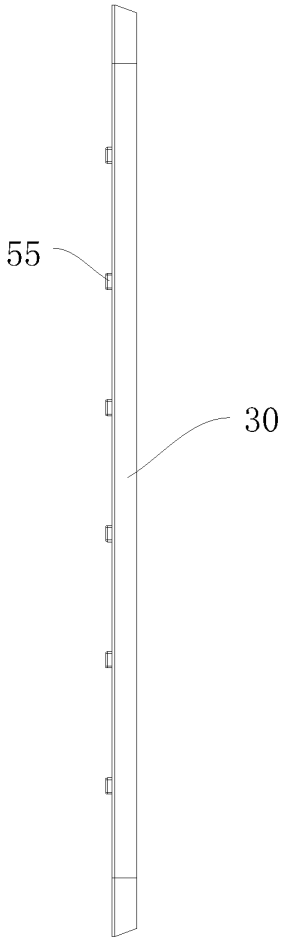

FIG. 20

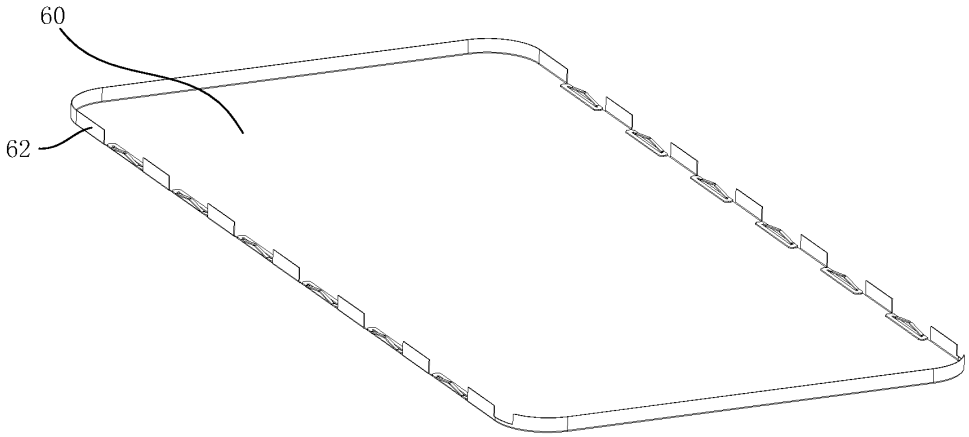

FIG. 21

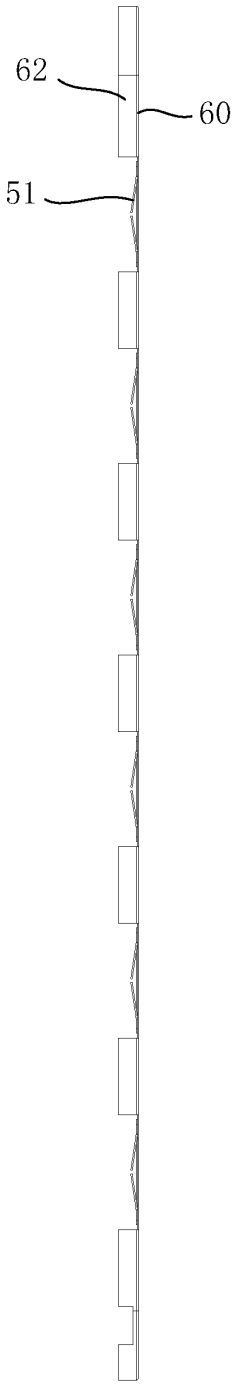

FIG. 22

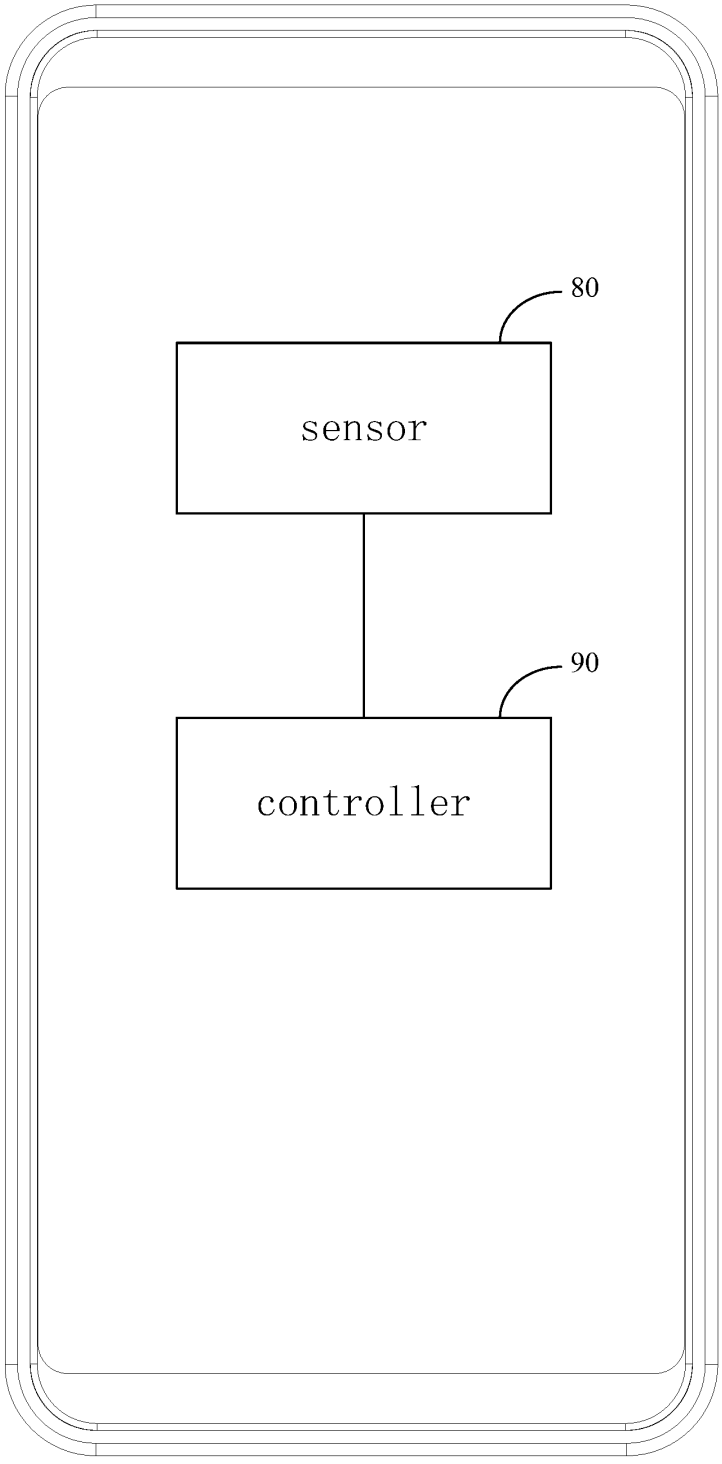

FIG. 23

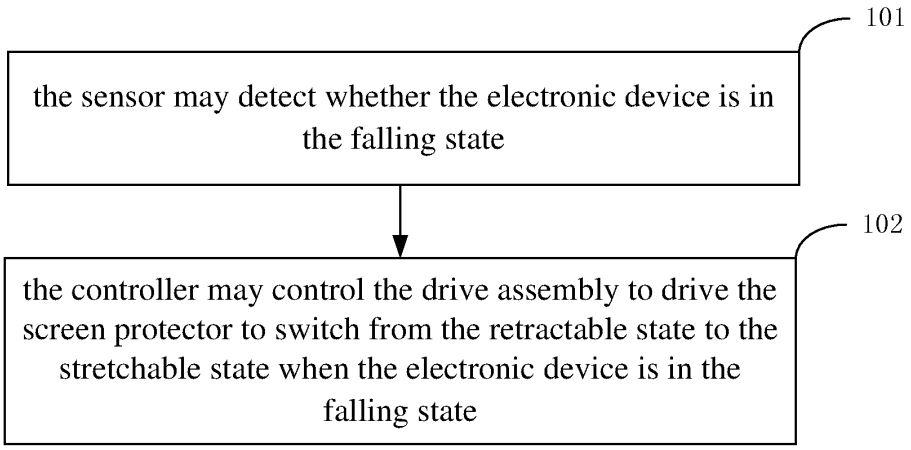
101
the sensor may detect whether the electronic device is in the falling state
102
the controller may control the drive assembly to drive the screen protector to switch from the retractable state to the stretchable state when the electronic device is in the falling state

FIG. 24

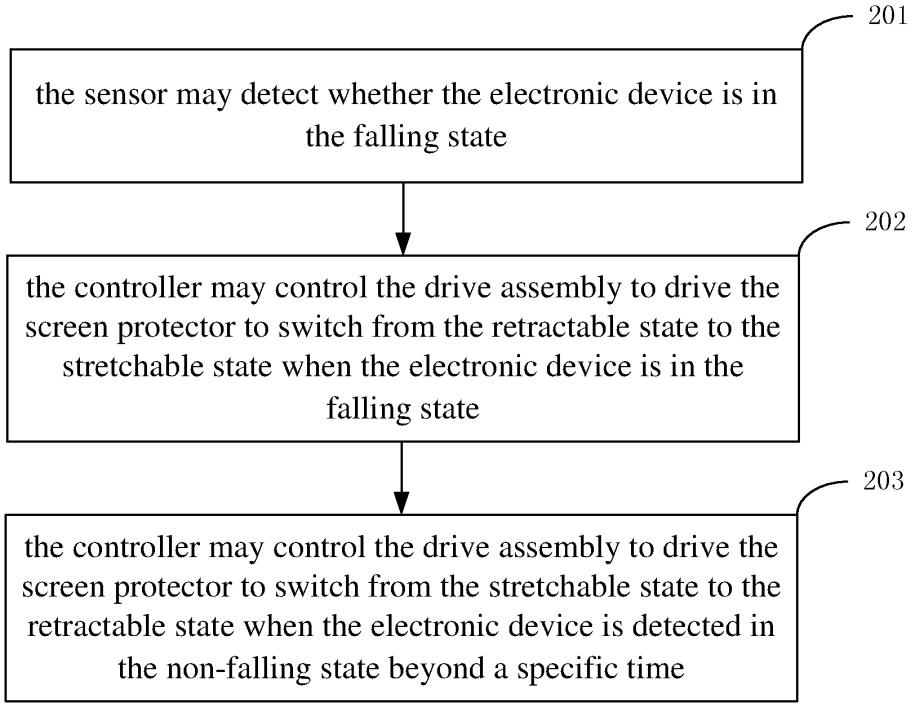
201
the sensor may detect whether the electronic device is in the falling state
202
the controller may control the drive assembly to drive the screen protector to switch from the retractable state to the stretchable state when the electronic device is in the falling state
203
the controller may control the drive assembly to drive the screen protector to switch from the stretchable state to the retractable state when the electronic device is detected in the non-falling state beyond a specific time

FIG. 25