(12) INTERNATIONAL APPLICATION PUBLISHED UNDER THE PATENT COOPERATION TREATY (PCT)

(19) World Intellectual Property Organization
International Bureau

(43) International Publication Date
8 November 2012 (08.11.2012)

WIPO | PCT

(10) International Publication Number
WO 2012/151320 A1

(51) International Patent Classification: *B62J 11/00* (2006.01)

(21) International Application Number: PCT/US2012/036185

(22) International Filing Date: 2 May 2012 (02.05.2012)

(25) Filing Language: English

(26) Publication Language: English

(30) Priority Data:

61/518,174	2 May 2011 (02.05.2011)	US
61/571,254	23 June 2011 (23.06.2011)	US
61/631,674	9 January 2012 (09.01.2012)	US

(72) Inventor; and
(71) Applicant : **GOLDMAN, Anthony, R.** [US/US]; 2505 Blossom St., Apt F, Columbia, SC 29205 (US).

(74) Agent: **SERBIN, Todd, Allen**; Nachmias, Morris & Alt, P.C., 1201 Main St. Suite 1840, Columbia, SC 29201 (US).

(81) Designated States *(unless otherwise indicated, for every kind of national protection available)*: AE, AG, AL, AM, AO, AT, AU, AZ, BA, BB, BG, BH, BR, BW, BY, BZ, CA, CH, CL, CN, CO, CR, CU, CZ, DE, DK, DM, DO, DZ, EC, EE, EG, ES, FI, GB, GD, GE, GH, GM, GT, HN, HR, HU, ID, IL, IN, IS, JP, KE, KG, KM, KN, KP, KR, KZ, LA, LC, LK, LR, LS, LT, LU, LY, MA, MD, ME, MG, MK, MN, MW, MX, MY, MZ, NA, NG, NI, NO, NZ, OM, PE, PG, PH, PL, PT, QA, RO, RS, RU, RW, SC, SD, SE, SG, SK, SL, SM, ST, SV, SY, TH, TJ, TM, TN, TR, TT, TZ, UA, UG, US, UZ, VC, VN, ZA, ZM, ZW.

(84) Designated States *(unless otherwise indicated, for every kind of regional protection available)*: ARIPO (BW, GH, GM, KE, LR, LS, MW, MZ, NA, RW, SD, SL, SZ, TZ, UG, ZM, ZW), Eurasian (AM, AZ, BY, KG, KZ, RU, TJ, TM), European (AL, AT, BE, BG, CH, CY, CZ, DE, DK, EE, ES, FI, FR, GB, GR, HR, HU, IE, IS, IT, LT, LU, LV, MC, MK, MT, NL, NO, PL, PT, RO, RS, SE, SI, SK, SM, TR), OAPI (BF, BJ, CF, CG, CI, CM, GA, GN, GQ, GW, ML, MR, NE, SN, TD, TG).

Published:

— *with international search report (Art. 21(3))*

— *with amended claims (Art. 19(1))*

(54) Title: MAGNETIC BOTTLE SYSTEM AND METHODS OF USE

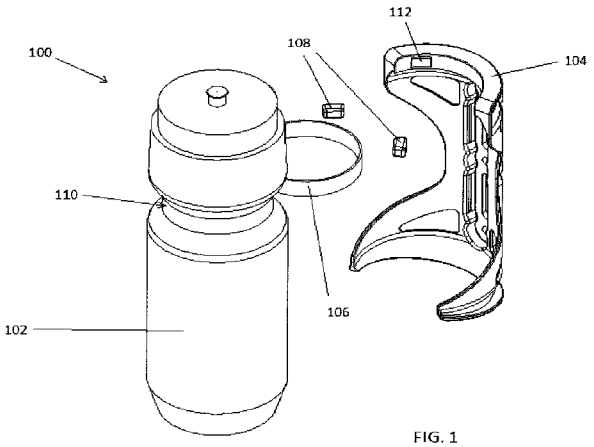

FIG. 1

(57) Abstract: According to an aspect of some embodiments of the present invention there is provided a bottle mount system which uses an at least partially open-faced, magnetic mount to effectuate easier removal and insertion of a bottle. In some embodiments of the invention, the bottle is fitted with a magnetically active ring which magnetically interacts with the mount. In an embodiment of the invention, the mount is comprised of a neck with arms which are shorter than arms provided to a base, thereby creating a funnel-like shape with the more open end towards the top of the mount for focusing insertion of the bottle and allowing for removal of the bottle along multiple axes and directions.

WO 2012/151320 A1