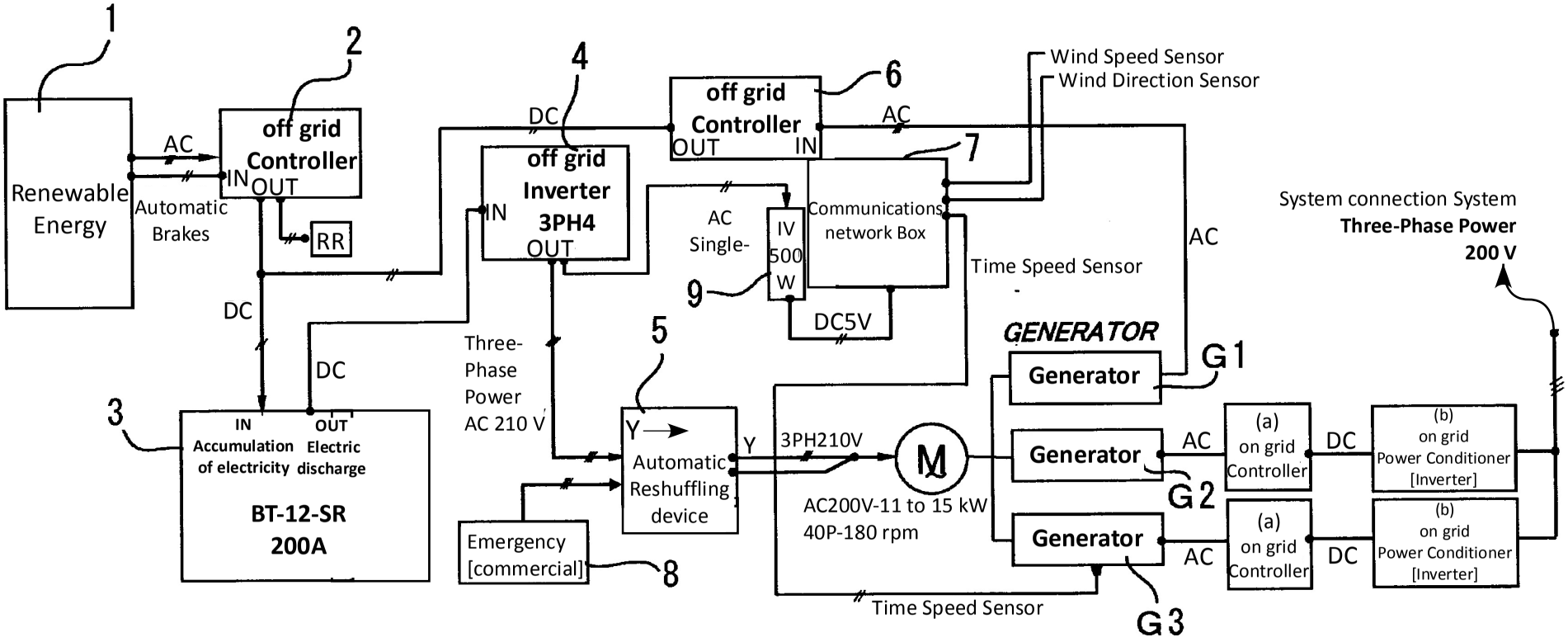
1
2
4
6
Wind Speed Sensor
Wind Direction Sensor
Renewable Energy
AC
off grid Controller
IN OUT
Automatic Brakes
RR
DC
off grid Inverter 3PH4
IN
OUT
off grid Controller
OUT IN
AC
7
AC Single-
IV 500 W
9
Communications network Box
Time Speed Sensor
AC
System connection System
Three-Phase Power
200 V
DC
DC5V
GENERATOR
Three-Phase Power AC 210 V
5
3
IN OUT
Accumulation of electricity
Electric discharge
BT-12-SR
200A
Y
Automatic Reshuffling device
Y
3PH210V
M
Generator
G1
Generator
G2
Generator
G3
AC
(a) on grid Controller
DC
(b) on grid Power Conditioner [Inverter]
AC200V-11 to 15 kW
40P-180 rpm
Emergency [commercial]
8
Time Speed Sensor

FIG. 1

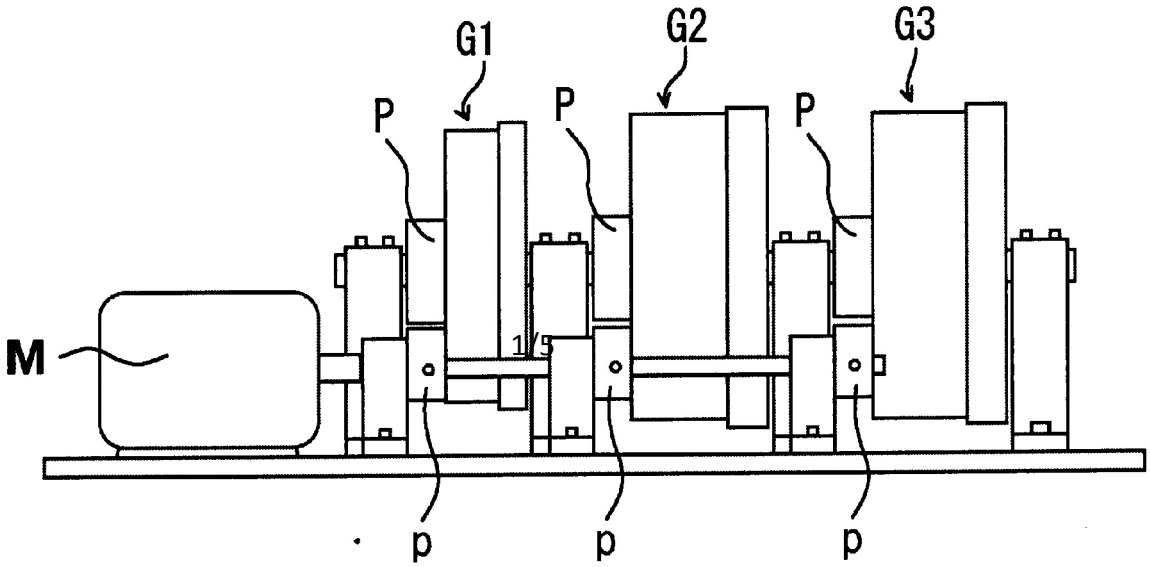

FIG. 2

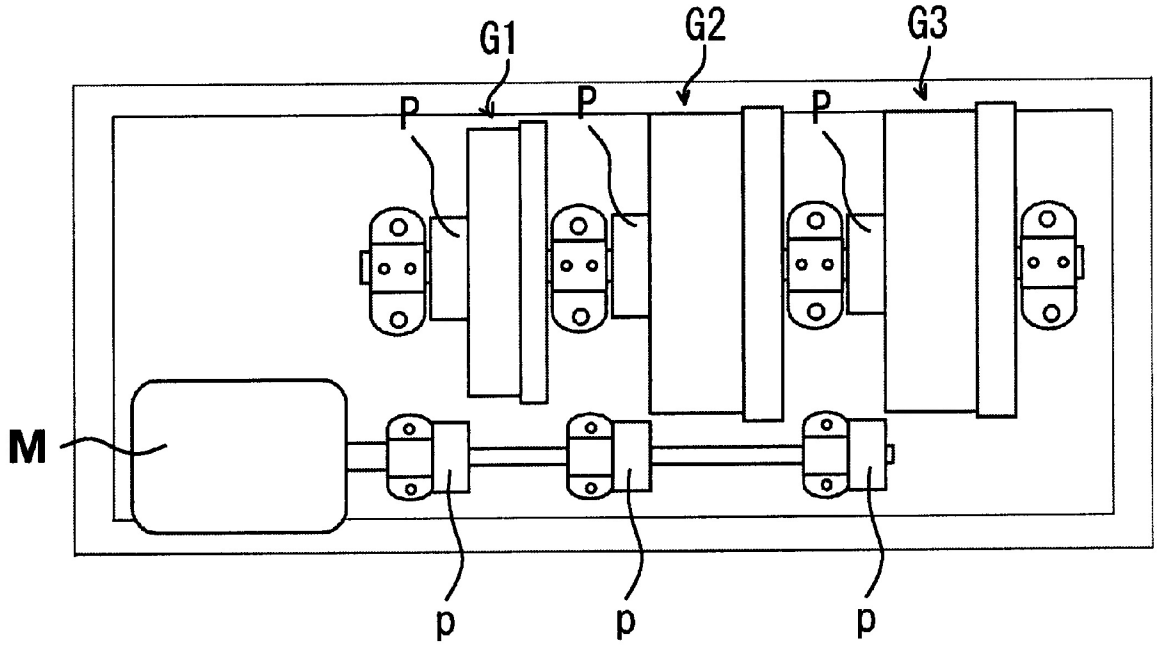

FIG. 3

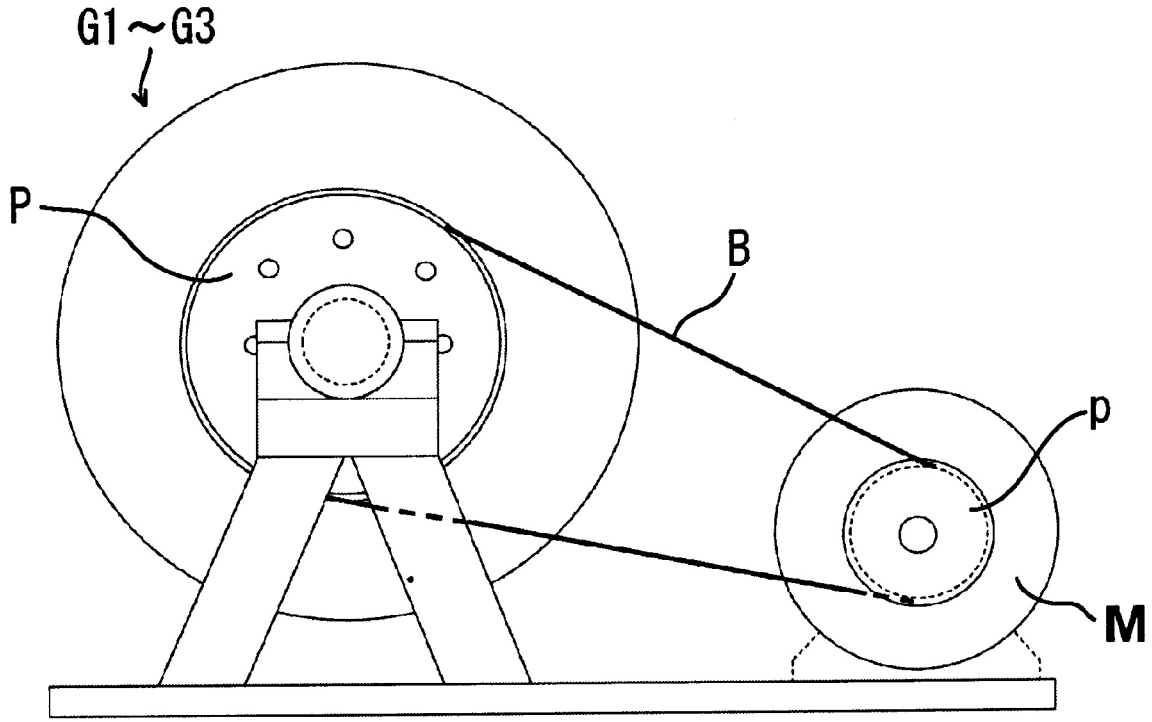

FIG. 4

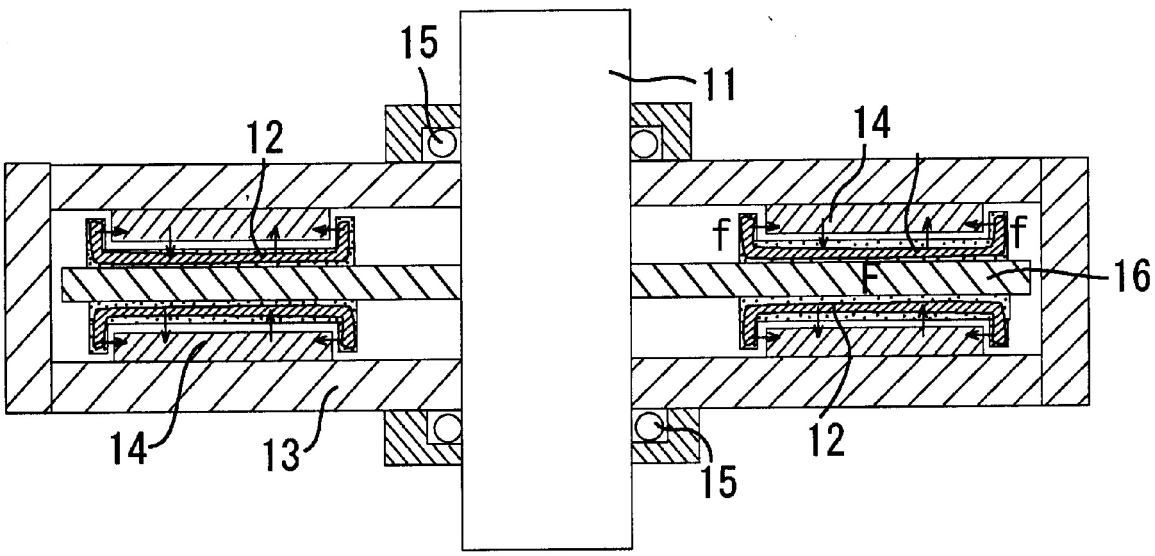

FIG. 5

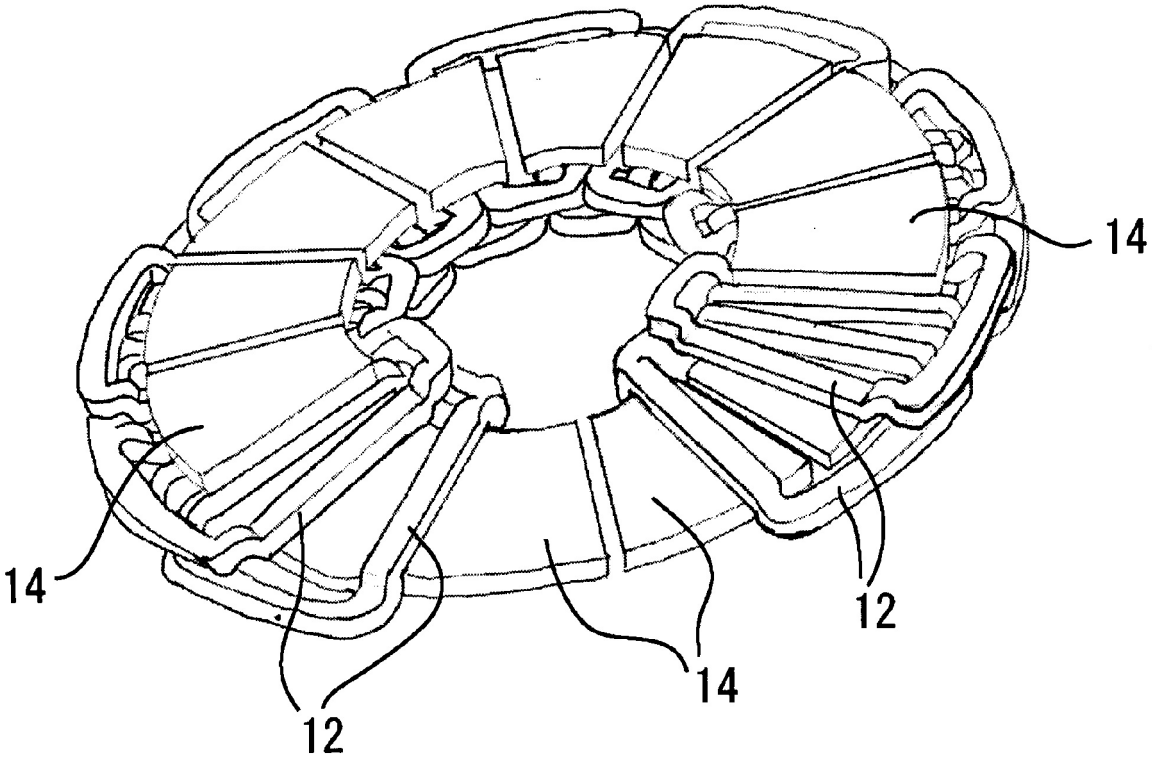

FIG. 6

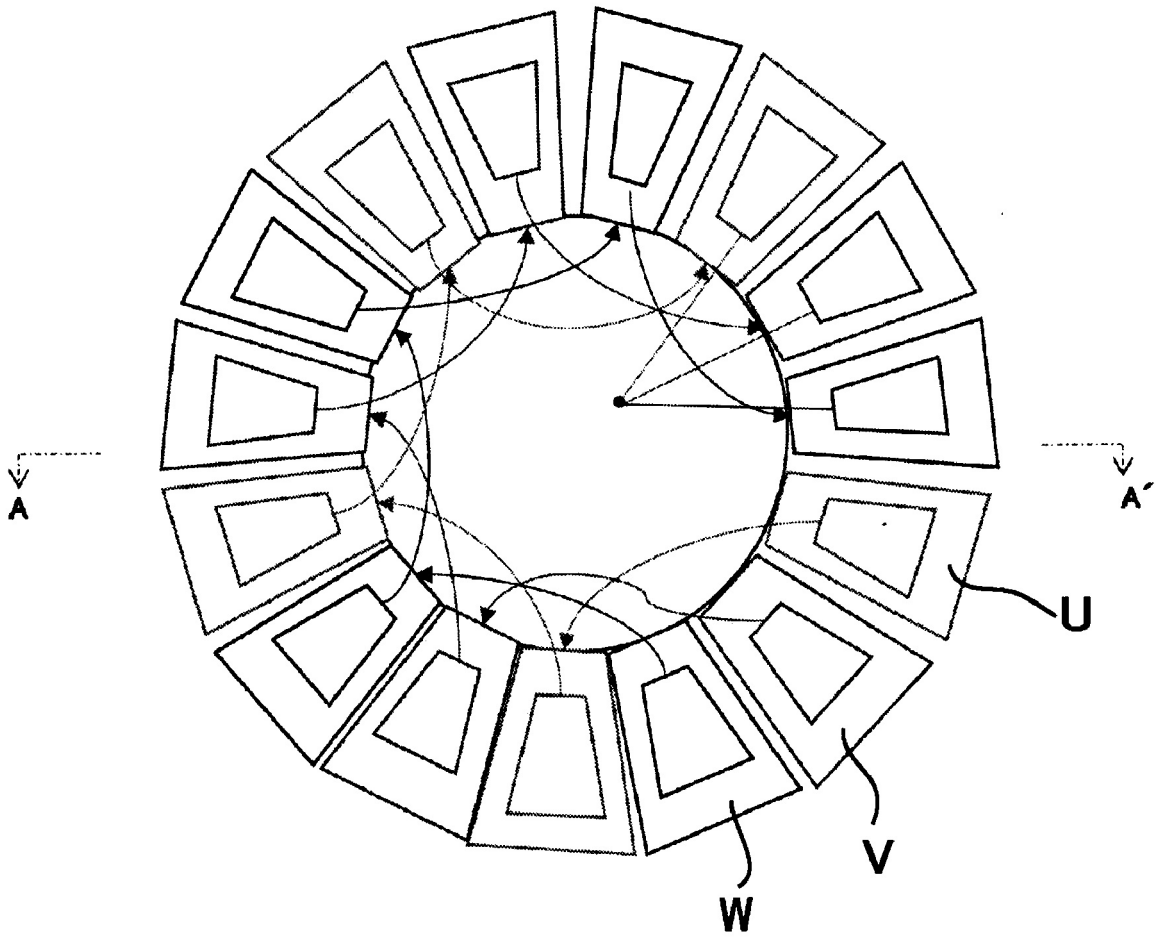

FIG. 7

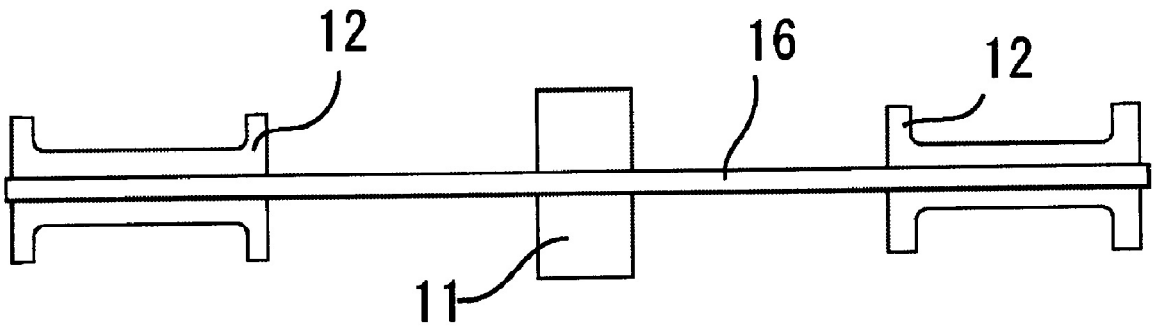

FIG. 8

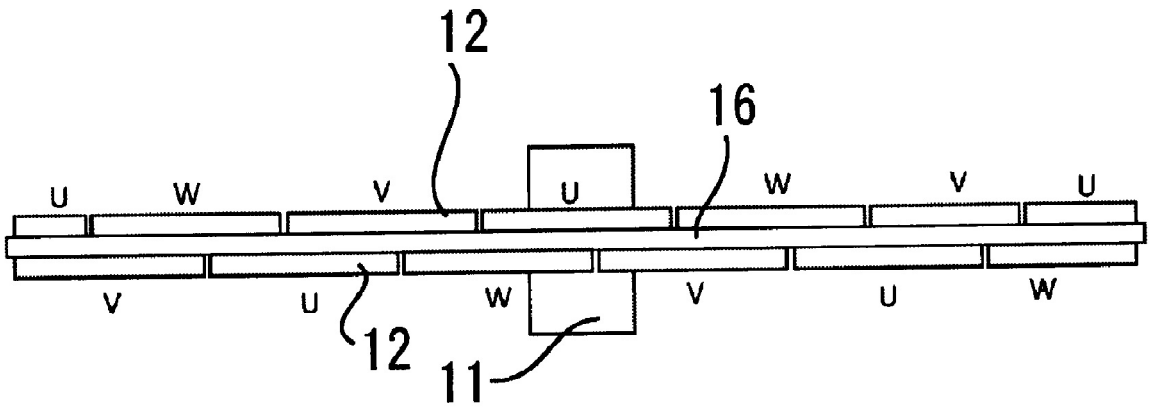

FIG. 9