


FIG. 1A

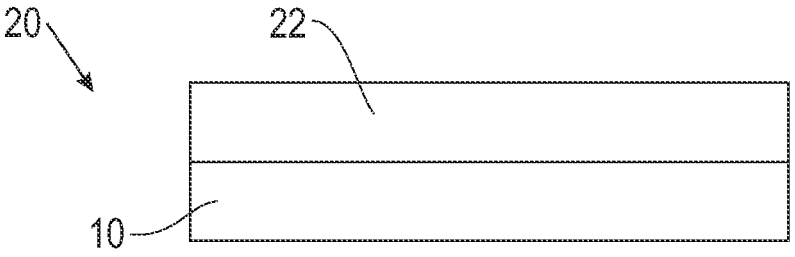


FIG. 1B

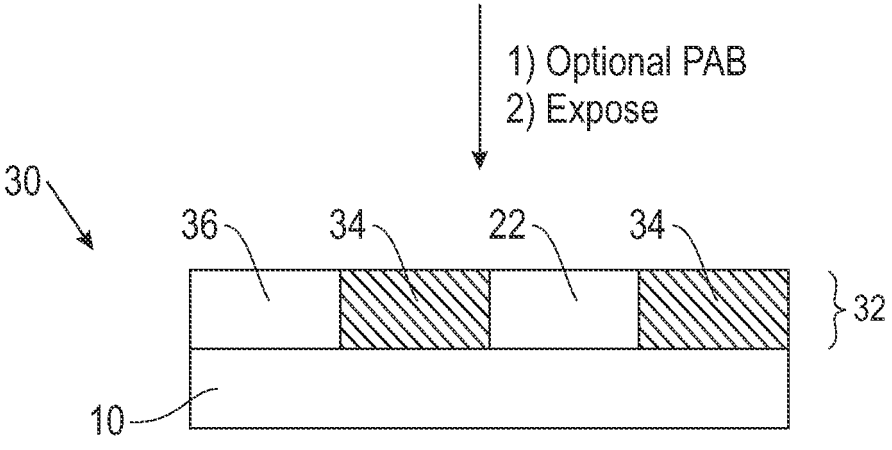


FIG. 1C

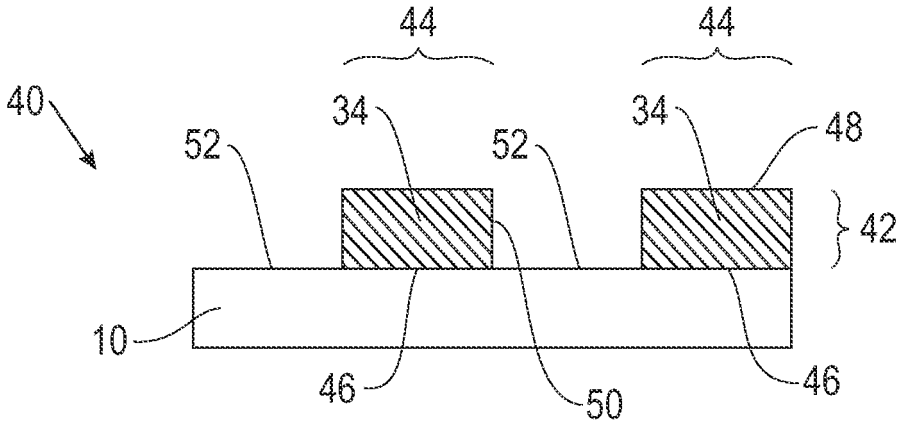
44
44
40
34
34
48
52
52
42
10
46
50
46

FIG. 1D

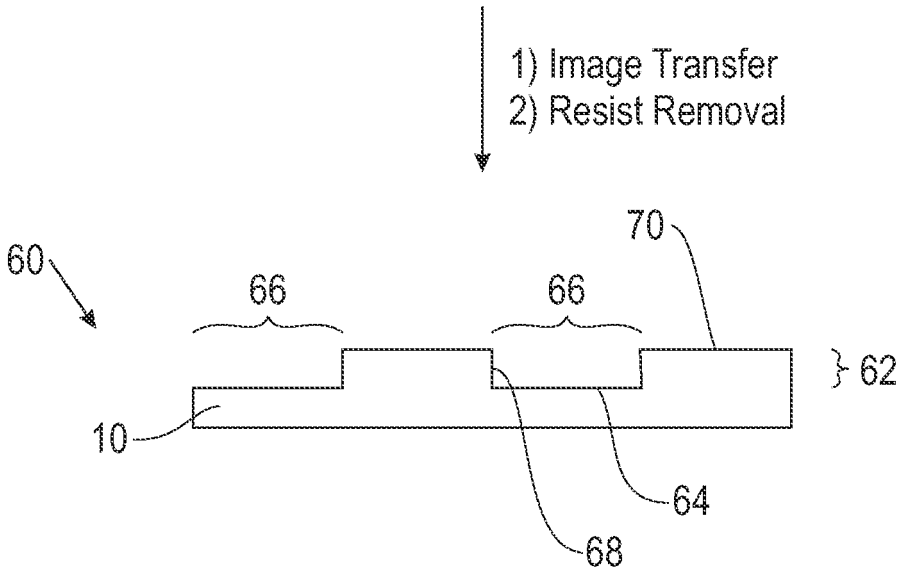
1) Image Transfer
2) Resist Removal
70
60
66
66
62
10
64
68

FIG. 1E

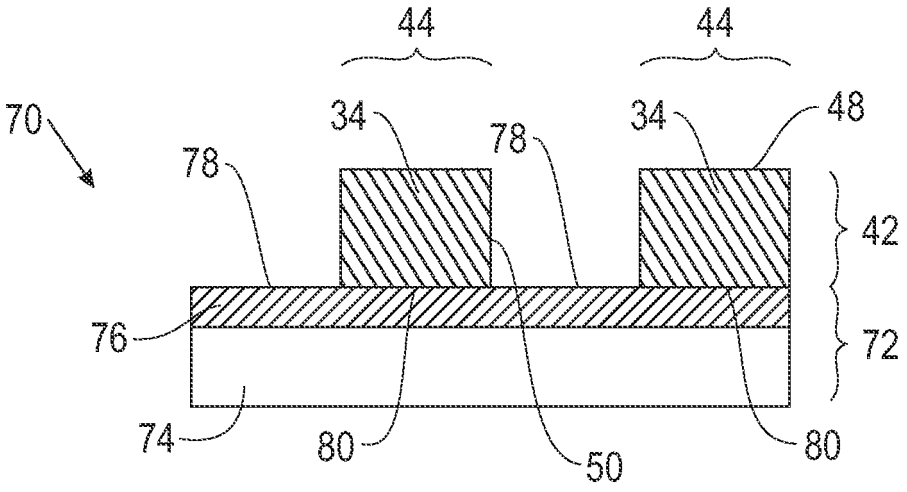


FIG. 2

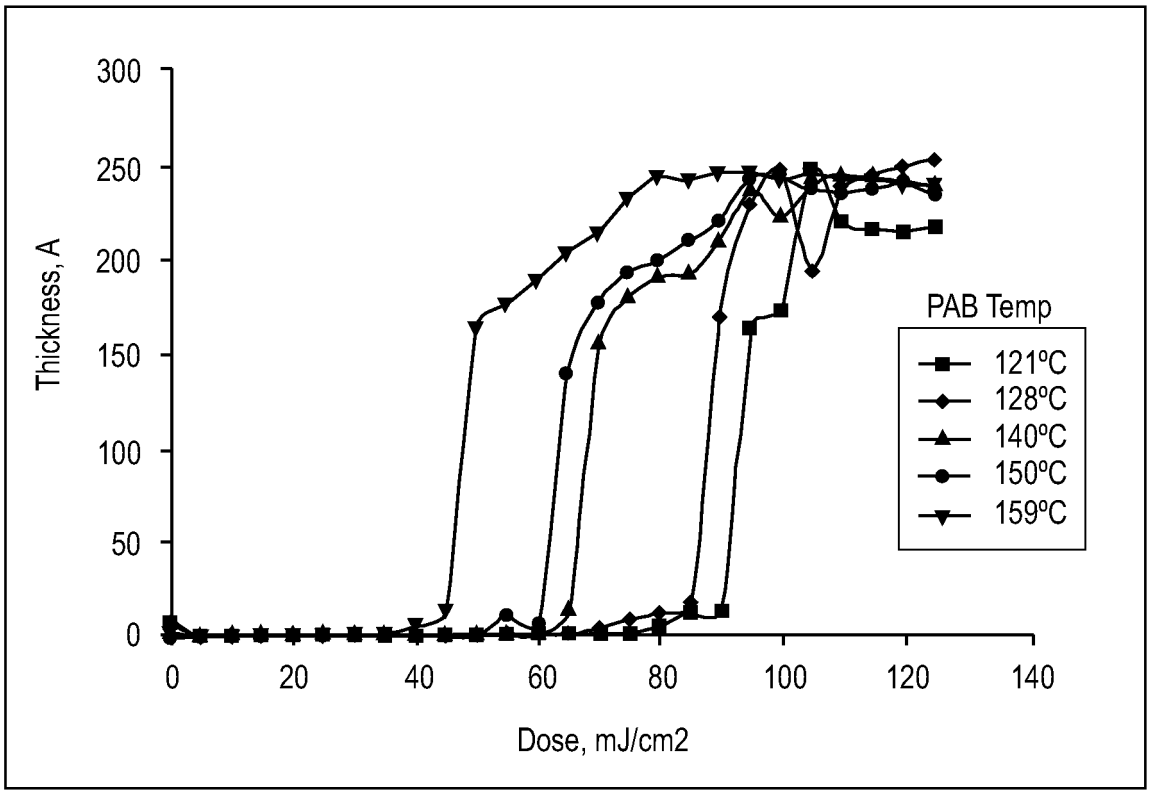
300
250
200
150
100
50
0
Thickness, A
0
20
40
60
80
100
120
140
Dose, mJ/cm2
PAB Temp
121ºC
128ºC
140ºC
150ºC
159ºC

FIG. 3

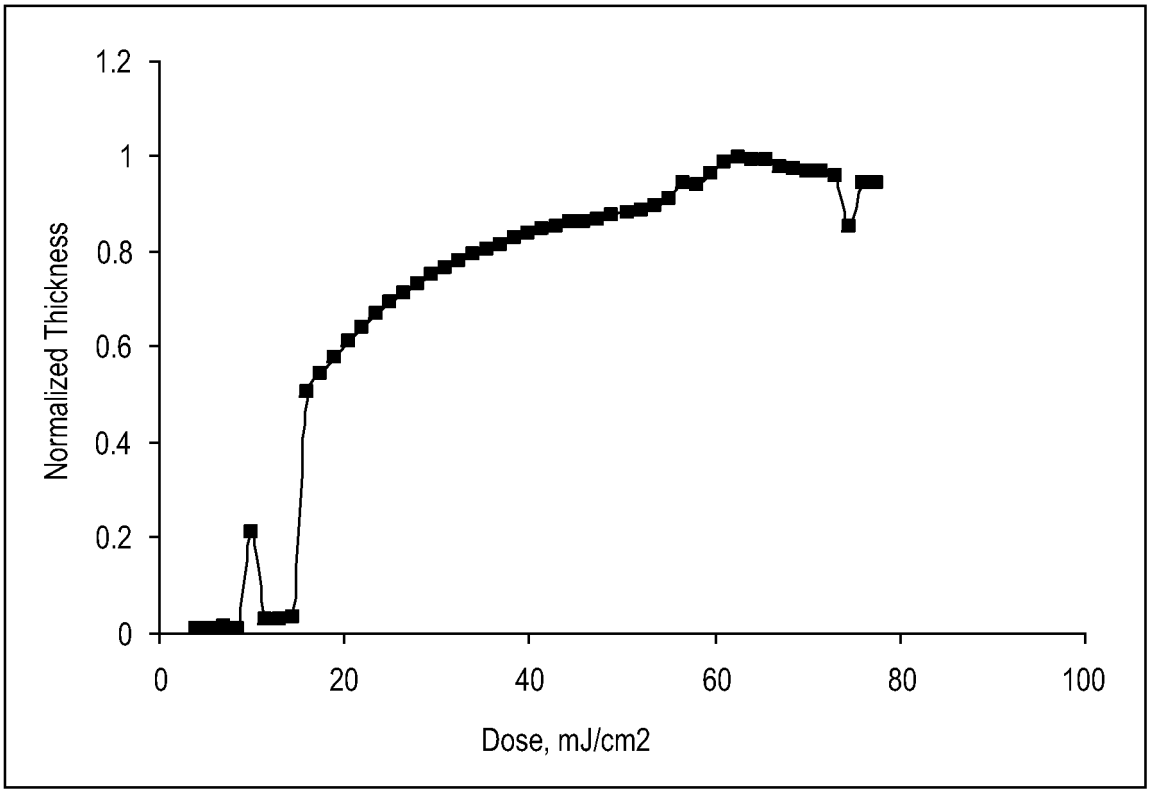
1.2
1
0.8
0.6
0.4
0.2
0
Normalized Thickness
0
20
40
60
80
100
Dose, mJ/cm2

FIG. 4

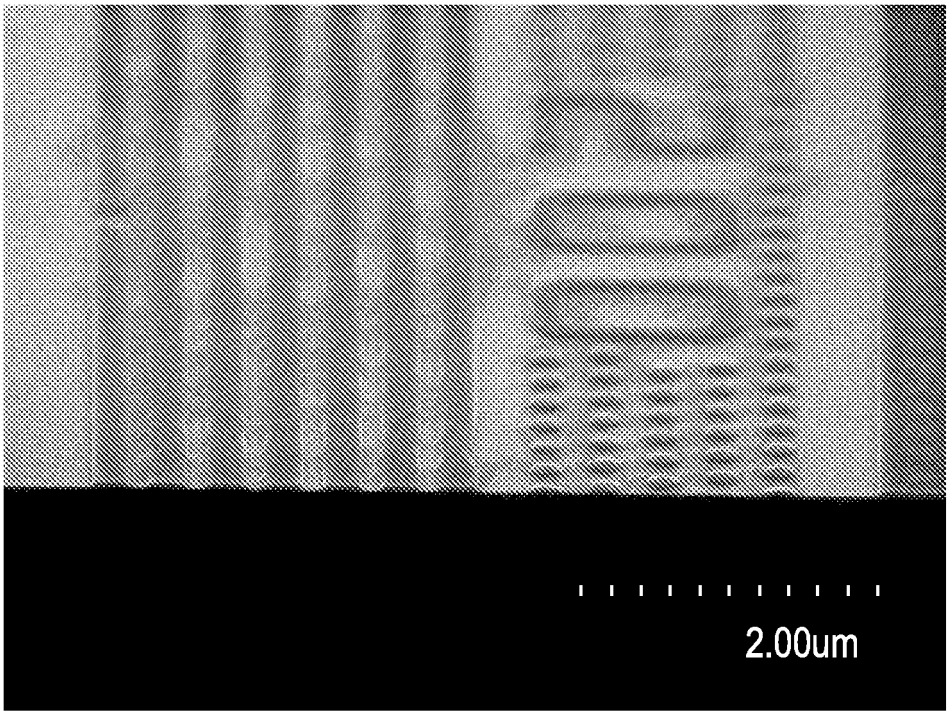


FIG. 5

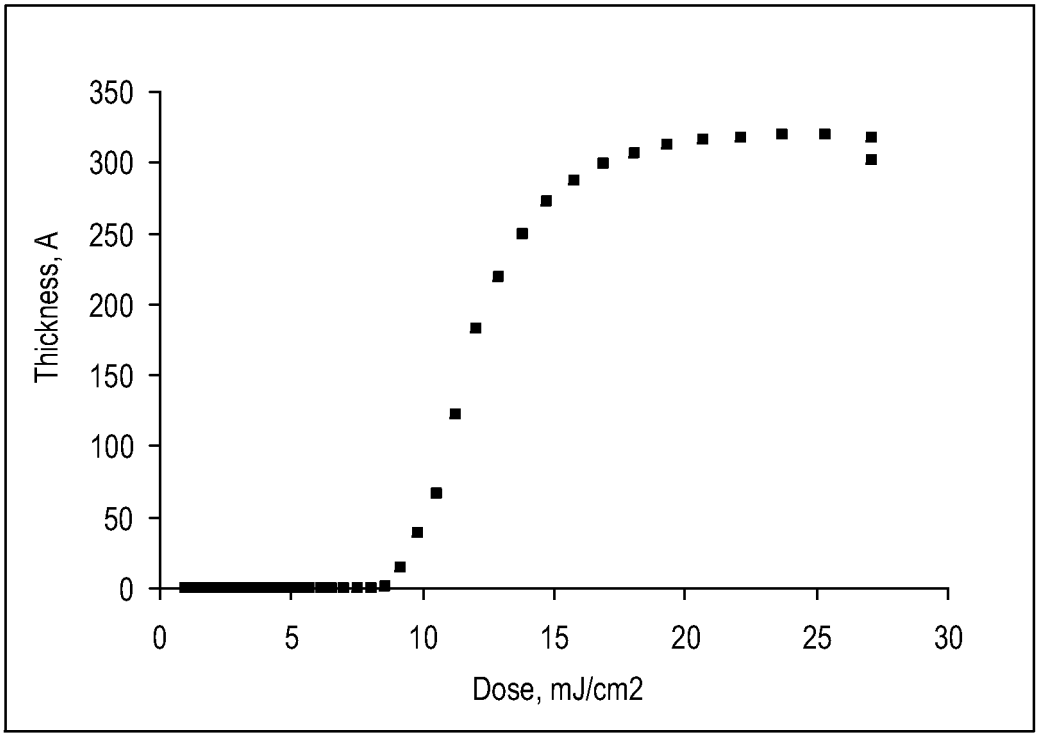
350
300
250
200
150
100
50
0
Thickness, A
0
5
10
15
20
25
30
Dose, mJ/cm2

FIG. 6

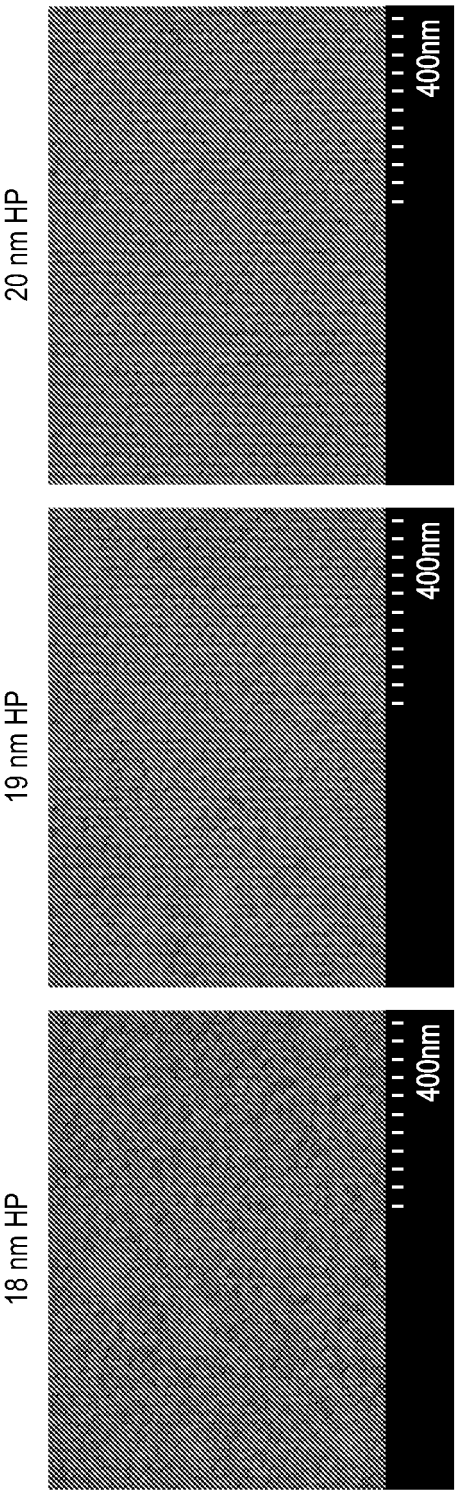


FIG. 7A

FIG. 7B

FIG. 7C

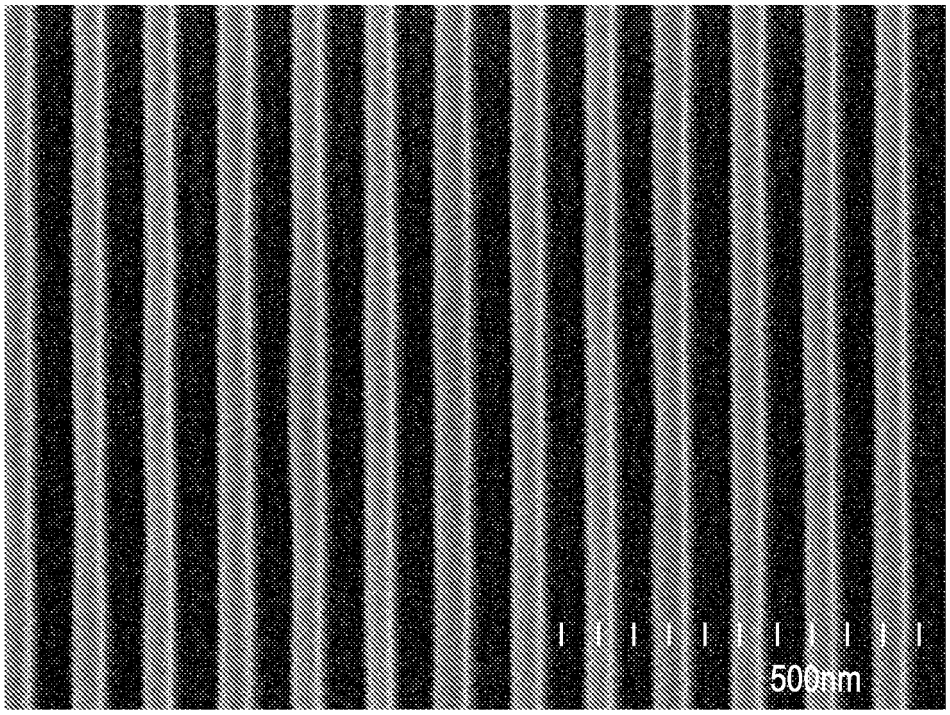


FIG. 8

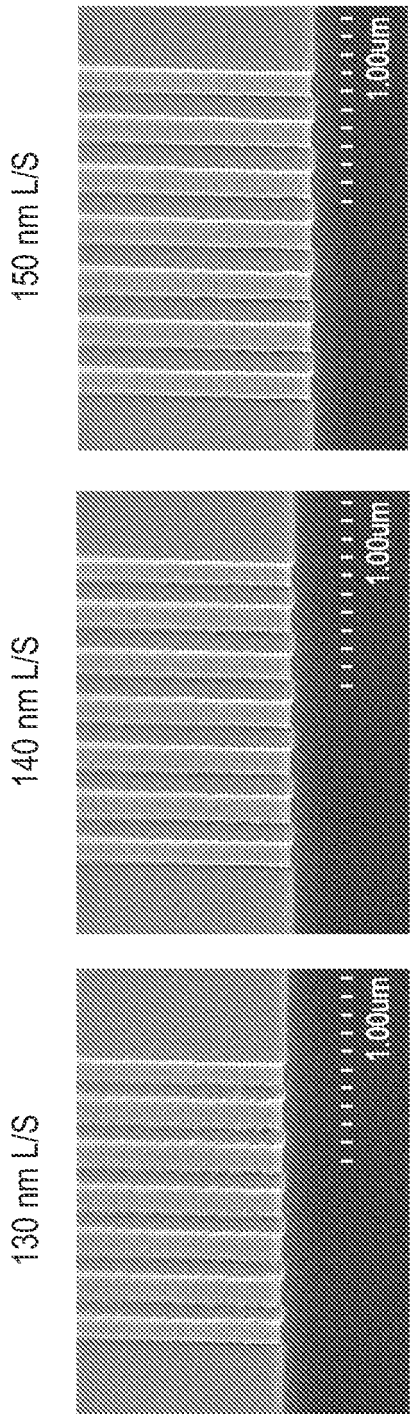


FIG. 9A

FIG. 9B

FIG. 9C

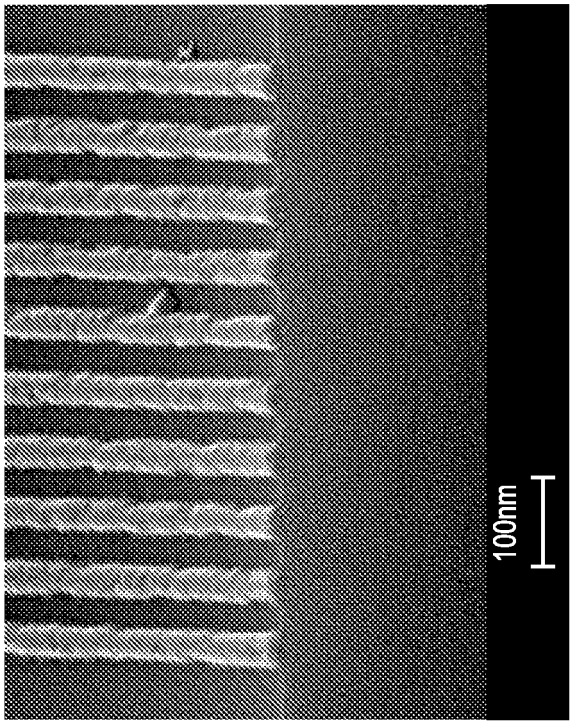


FIG. 10B

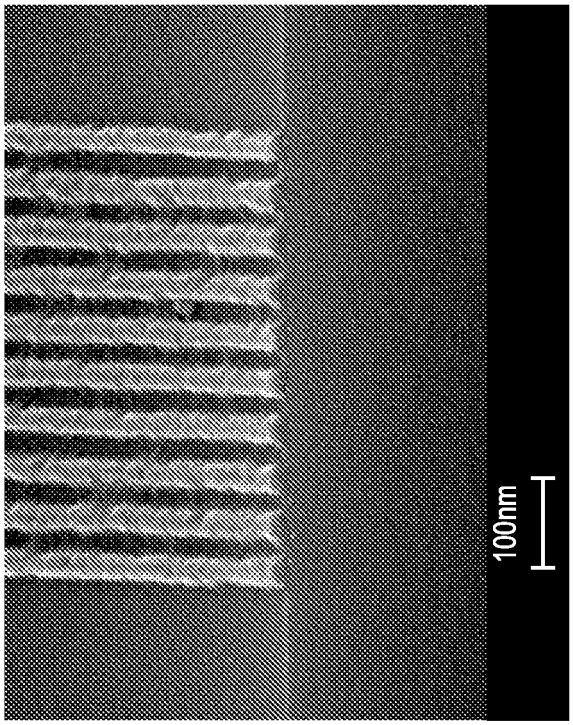


FIG. 10A

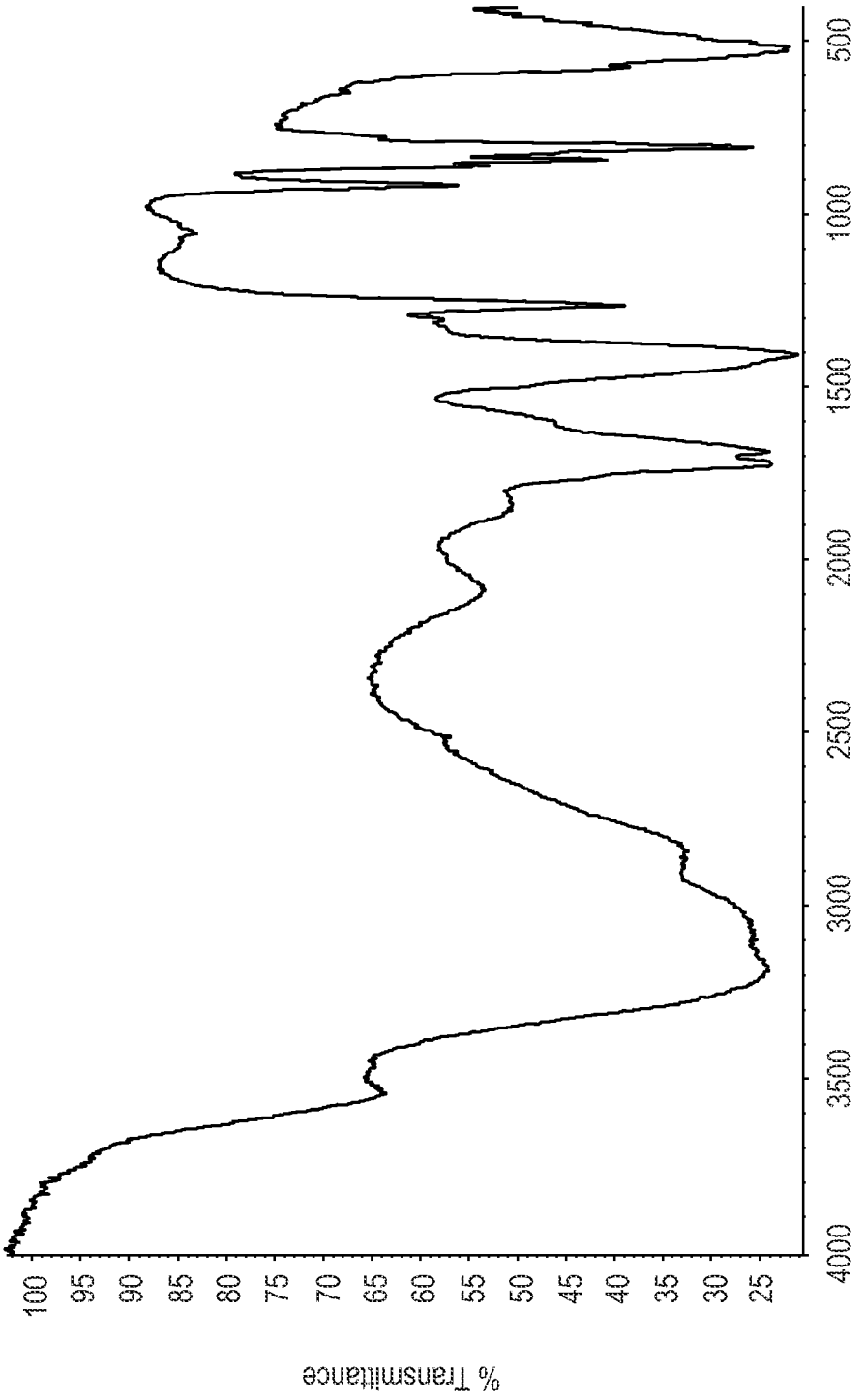
% Transmittance
100
95
90
85
80
75
70
65
60
55
50
45
40
35
30
25
4000
3500
3000
2500
2000
1500
1000
500
Wavenumbers (cm-1)

FIG. 11

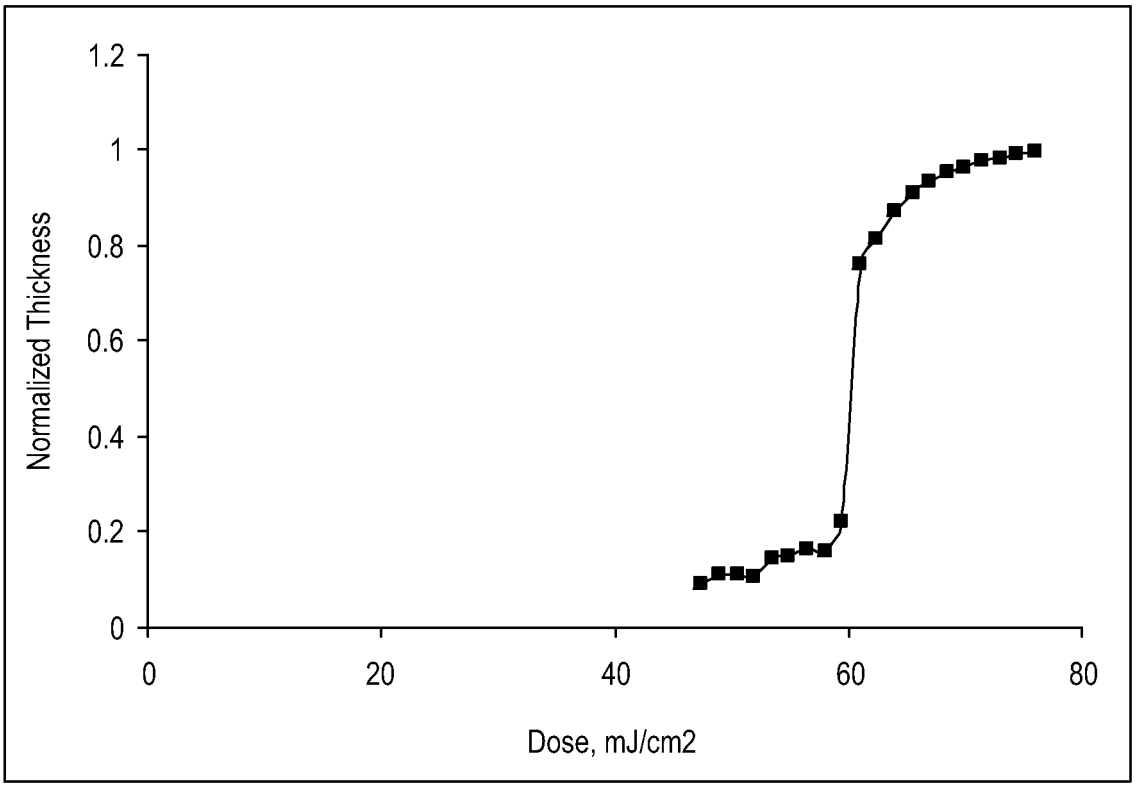


FIG. 12

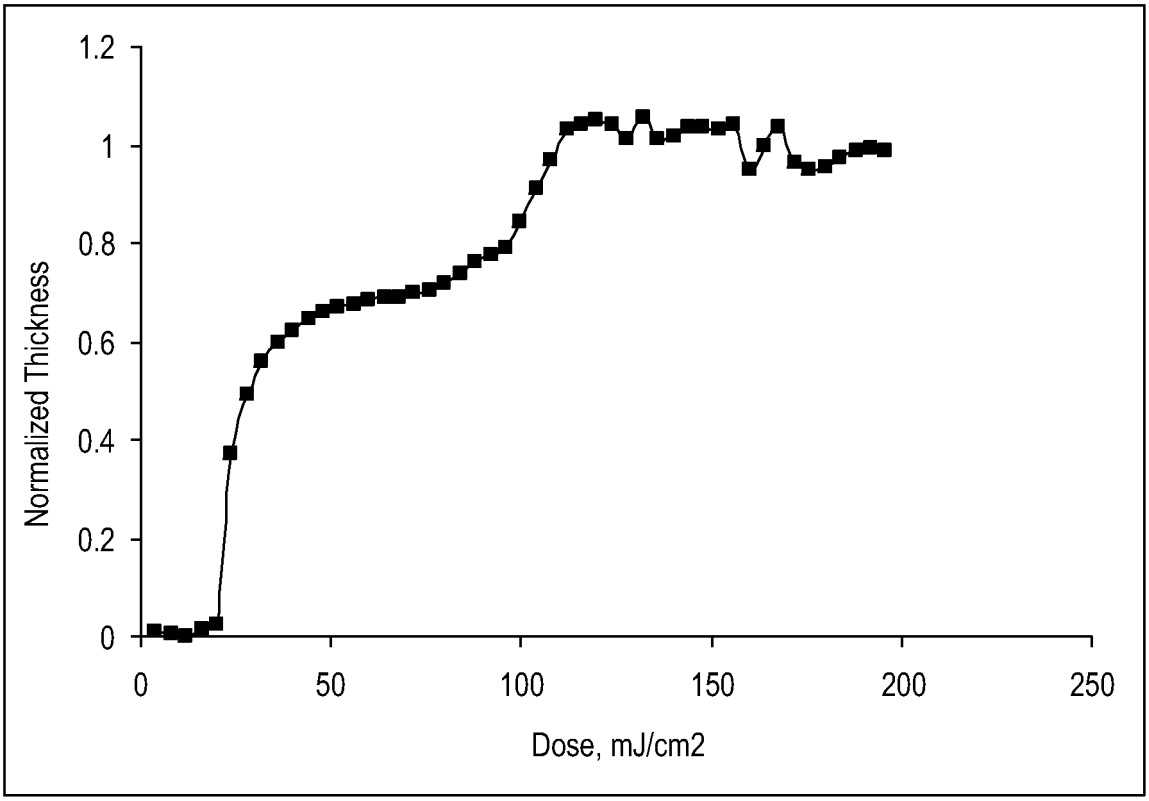
1.2
1
0.8
0.6
0.4
0.2
0
Normalized Thickness
0
50
100
150
200
250
Dose, mJ/cm2

FIG. 13

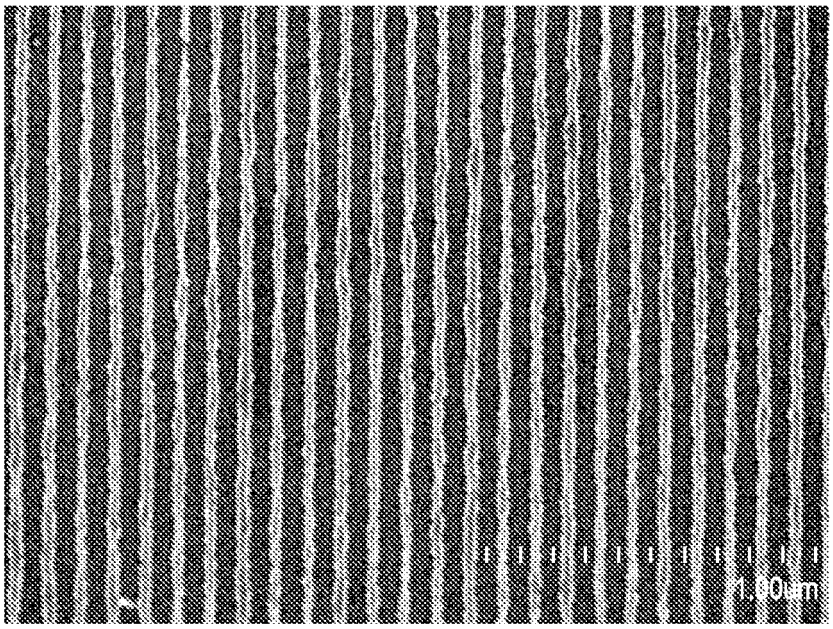


FIG. 14