(12) INTERNATIONAL APPLICATION PUBLISHED UNDER THE PATENT COOPERATION TREATY (PCT)

(19) World Intellectual Property Organization
International Bureau

(43) International Publication Date
28 August 2025 (28.08.2025)

WIPO | PCT

(10) International Publication Number
WO 2025/179163 A1

(51) International Patent Classification:
B01L 3/00 (2006.01)

(21) International Application Number:
PCT/US2025/016824

(22) International Filing Date:
21 February 2025 (21.02.2025)

(25) Filing Language: English

(26) Publication Language: English

(30) Priority Data:
63/556,556 22 February 2024 (22.02.2024) US

(71) Applicant: **10X GENOMICS, INC.** [US/US]; 6230 Stoneridge Mall Road, Pleasanton, California 94588-3260 (US).

(72) Inventors: **ZHANG, Yiran**; 6230 Stoneridge Mall Road, Pleasanton, California 94588-3260 (US). **WHEELER, Tobias Daniel**; 6230 Stoneridge Mall Road, Pleasanton, California 94588-3260 (US). **SHI, Xueda**; 6230 Stoneridge Mall Road, Pleasanton, California 94588-3260 (US). **BROWN, Brenden Janatpour**; 6230 Stoneridge Mall Road, Pleasanton, California 94588-3260 (US). **PENNELL, Marissa**; 6230 Stoneridge Mall Road, Pleasanton, California 94588-3260 (US).

(74) Agent: **KENNY, Stephen J.** et al.; Foley Hoag LLP, 155 Seaport Boulevard, Boston, Massachusetts 02210-2600 (US).

(81) Designated States *(unless otherwise indicated, for every kind of national protection available)*: AE, AG, AL, AM, AO, AT, AU, AZ, BA, BB, BG, BH, BN, BR, BW, BY, BZ, CA, CH, CL, CN, CO, CR, CU, CV, CZ, DE, DJ, DK, DM, DO, DZ, EC, EE, EG, ES, FI, GB, GD, GE, GH, GM, GT, HN, HR, HU, ID, IL, IN, IQ, IR, IS, IT, JM, JO, JP, KE, KG, KH, KN, KP, KR, KW, KZ, LA, LC, LK, LR, LS, LU, LY, MA, MD, MG, MK, MN, MU, MW, MX, MY, MZ, NA,

(54) Title: SYSTEMS AND METHODS FOR THERMAL, EVAPORATION AND VOLUME CONTROL IN A FLOW CELL

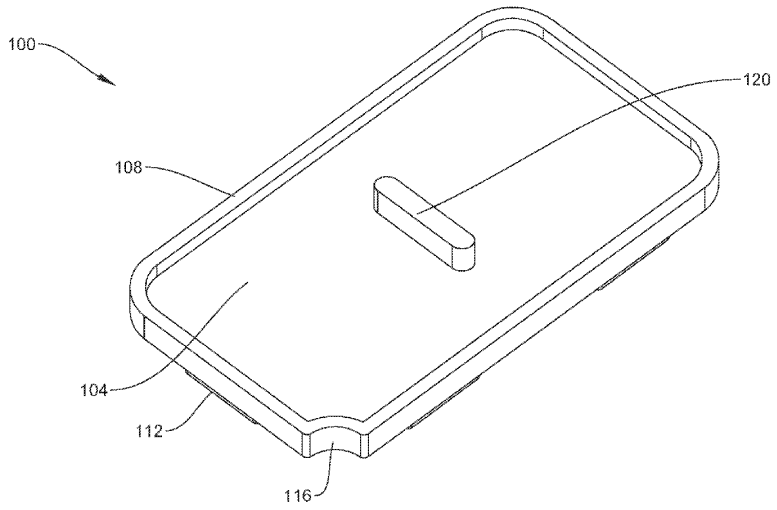

FIG. 1A

(57) Abstract: An adapter for incorporation into an open well flow cell, the adapter including a body having an upper surface, a lower surface spaced from the upper surface defining a thickness profile therebetween, at least one side extending about a perimeter of the body, an inlet formed in the body extending through the thickness of the upper surface and the lower surface, at least one foot extending from the lower surface, each foot of the at least one foot extending a vertical distance away from the lower surface and a protrusion extending from the upper surface. The adaptor configured to be placed over, or onto, an open well flow cell to form an effectively closed, and reversible, flow cell. A variety of structural features are included to inhibit/prohibit gas bubbles from evaporating from the fluid reagent within the cell, and/or providing egress or venting of such bubbles.

WO 2025/179163 A1

[Continued on next page]

NG, NI, NO, NZ, OM, PA, PE, PG, PH, PL, PT, QA, RO, RS, RU, RW, SA, SC, SD, SE, SG, SK, SL, ST, SV, SY, TH, TJ, TM, TN, TR, TT, TZ, UA, UG, US, UY, UZ, VC, VN, WS, ZA, ZM, ZW.

(84) **Designated States** *(unless otherwise indicated, for every kind of regional protection available)*: ARIPO (BW, CV, GH, GM, KE, LR, LS, MW, MZ, NA, RW, SC, SD, SL, ST, SZ, TZ, UG, ZM, ZW), Eurasian (AM, AZ, BY, KG, KZ, RU, TJ, TM), European (AL, AT, BE, BG, CH, CY, CZ, DE, DK, EE, ES, FI, FR, GB, GR, HR, HU, IE, IS, IT, LT, LU, LV, MC, ME, MK, MT, NL, NO, PL, PT, RO, RS, SE, SI, SK, SM, TR), OAPI (BF, BJ, CF, CG, CI, CM, GA, GN, GQ, GW, KM, ML, MR, NE, SN, TD, TG).

Published:

— *with international search report (Art. 21(3))*

— *before the expiration of the time limit for amending the claims and to be republished in the event of receipt of amendments (Rule 48.2(h))*