REGISTRY OF TRADE MARKS & PATENTS SINGAPORE

11 NOV 1997

WORLD INTELLECTUAL PROPERTY ORGANIZATION
International Bureau

9704993-6

RTMPS copy

PCT

INTERNATIONAL APPLICATION PUBLISHED UNDER THE PATENT COOPERATION TREATY (PCT)

(51) International Patent Classification: A62D 3/00, B01D 1/00, F23G 7/00, 7/14, B02C 17/00, 17/04, 17/18, 23/00, B09B 3/00, B09C 1/06

A1

(11) International Publication Number: WO 96/27411

(43) International Publication Date: 12 September 1996 (12.09.96)

(21) International Application Number: PCT/CA96/00146

(22) International Filing Date: 6 March 1996 (06.03.96)

(30) Priority Data:
08/399,224 6 March 1995 (06.03.95) US

(60) Parent Application or Grant
(63) Related by Continuation
US 08/399,224 (CIP)
Filed on 6 March 1995 (06.03.95)

(71) Applicant (*for all designated States except US*): ELI ECO LOGIC INC. [CA/CA]; 143 Dennis Street, Rockwood, Ontario N0B 2K0 (CA).

(72) Inventors; and
(75) Inventors/Applicants (*for US only*): HALLETT, Douglas, J. [CA/CA]; R.R. #2, Acton, Ontario L7J 2L8 (CA). CAMPBELL, Kelvin, R. [CA/CA]; 49 Meyer Drive, Guelph, Ontario N1E 4H1 (CA).

(74) Agent: HUNT, John, C.; Blake, Cassels & Graydon, Box 25, Commerce Court West, Toronto, Ontario M5L 1A9 (CA).

(81) Designated States: AL, AM, AT, AU, AZ, BB, BG, BR, BY, CA, CH, CN, CZ, DE, DK, EE, ES, FI, GB, GE, HU, IS, JP, KE, KG, KP, KR, KZ, LK, LR, LS, LT, LU, LV, MD, MG, MK, MN, MW, MX, NO, NZ, PL, PT, RO, RU, SD, SE, SG, SI, SK, TJ, TM, TR, TT, UA, UG, US, UZ, VN, ARIPO patent (KE, LS, MW, SD, SZ, UG), Eurasian patent (AM, AZ, BY, KG, KZ, MD, RU, TJ, TM), European patent (AT, BE, CH, DE, DK, ES, FI, FR, GB, GR, IE, IT, LU, MC, NL, PT, SE), OAPI patent (BF, BJ, CF, CG, CI, CM, GA, GN, ML, MR, NE, SN, TD, TG).

Published
With international search report.
Before the expiration of the time limit for amending the claims and to be republished in the event of the receipt of amendments.

(54) Title: METHOD AND APPARATUS FOR TREATMENT OF ORGANIC WASTE MATERIAL

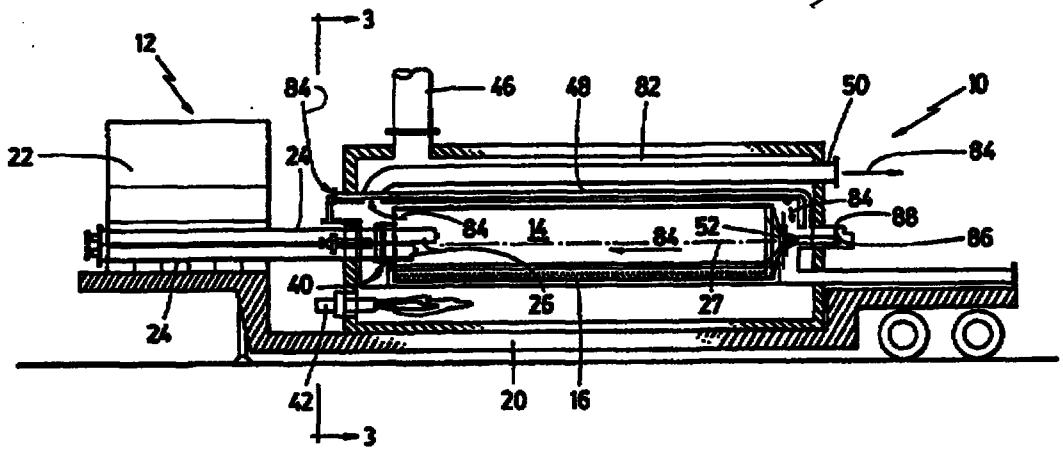

(57) Abstract

A process and an apparatus for separation of relatively volatile from non-volatile material, typically an organic component of agglomerate waste material from an inorganic solid component of the waste. The process includes milling material in a container partially immersed or floating in a bath of molten material to break up the material, typically an agglomerate, and thermally releasing the relatively volatile component as vapour therefrom. The apparatus relates to a desorption vessel at least partially immersed in a molten tin bath for heat transfer from the bath to the interior of the vessel for desorption of the relatively volatile component from such material.