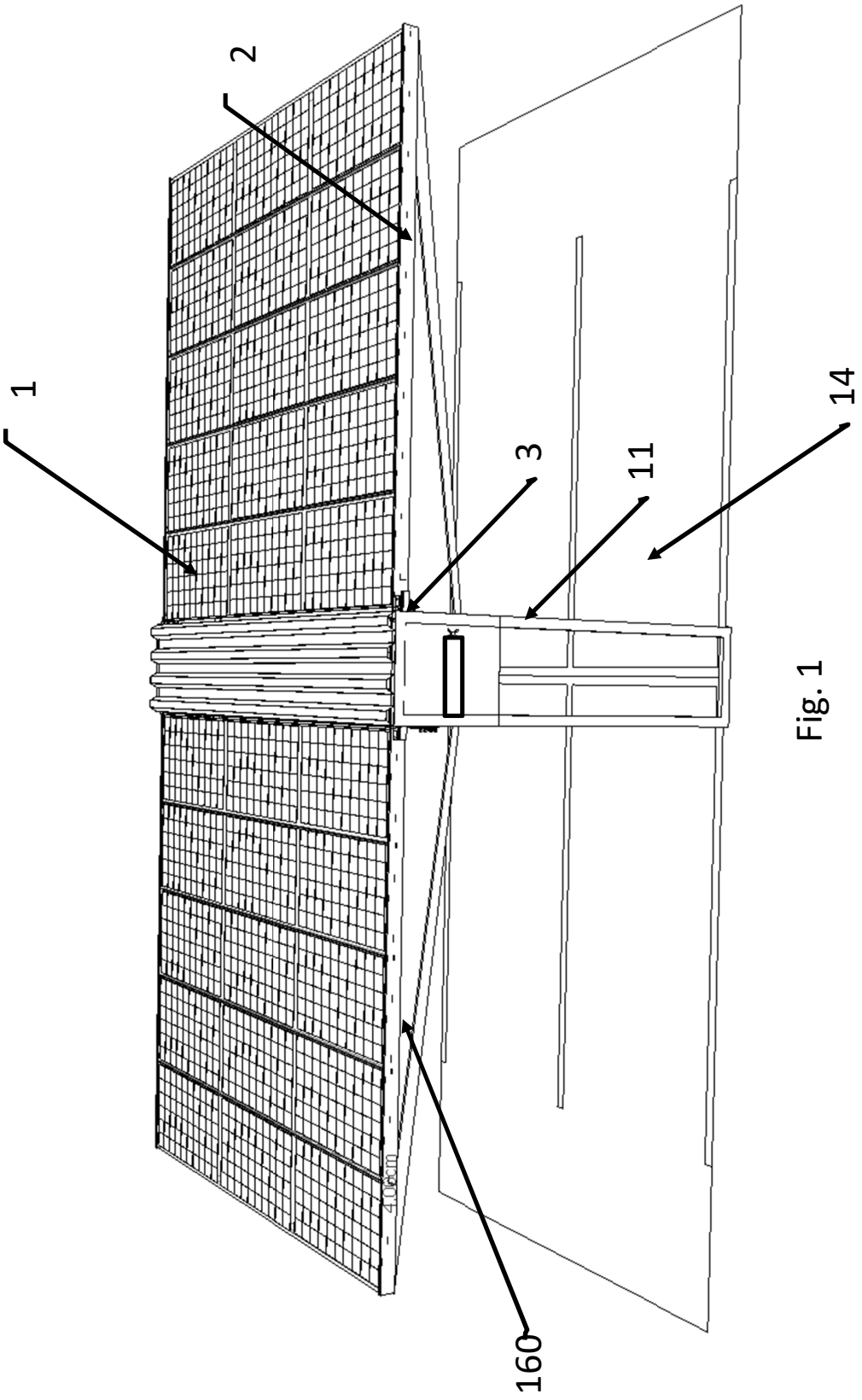

Fig. 1

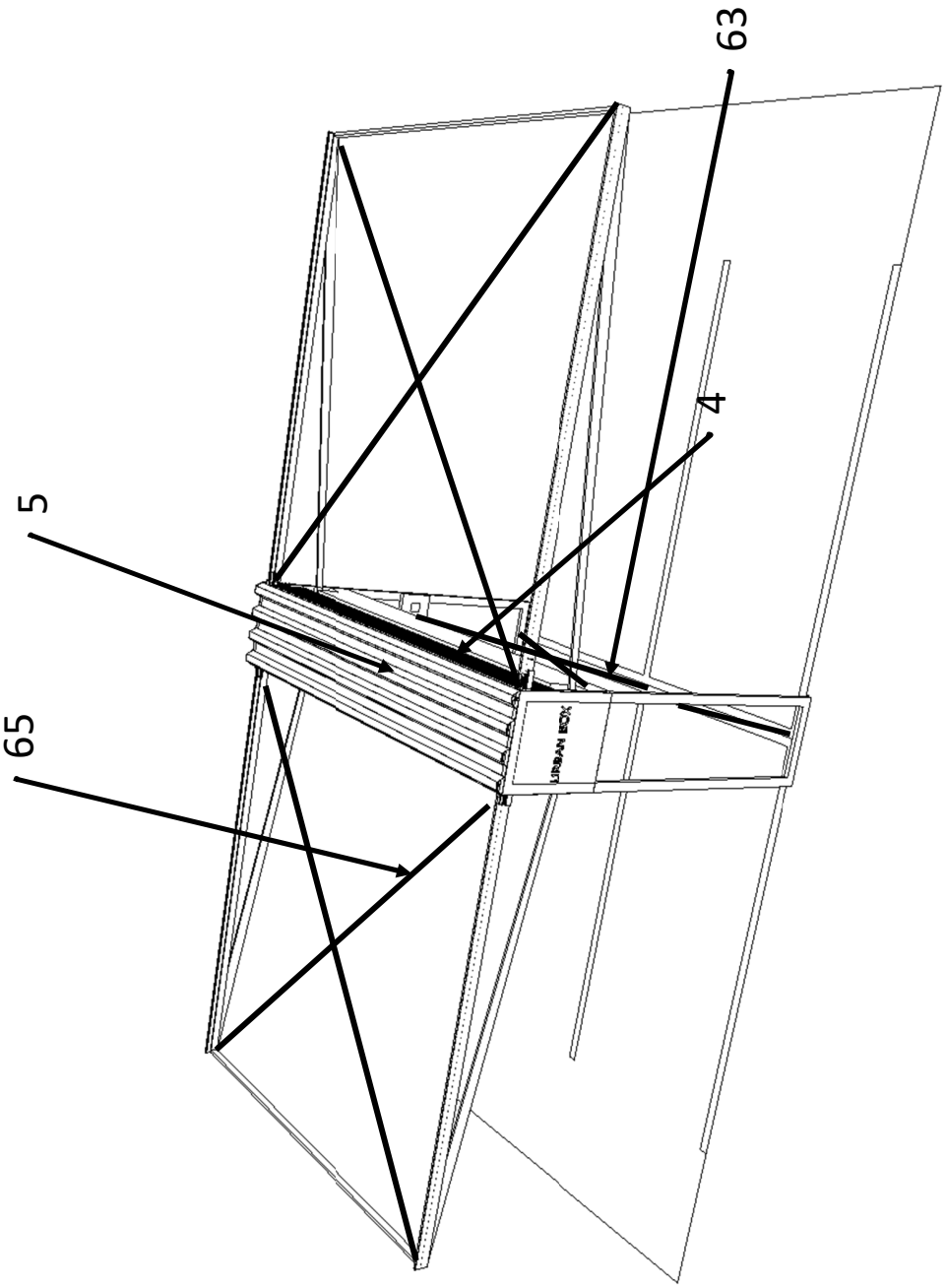

Fig. 2a

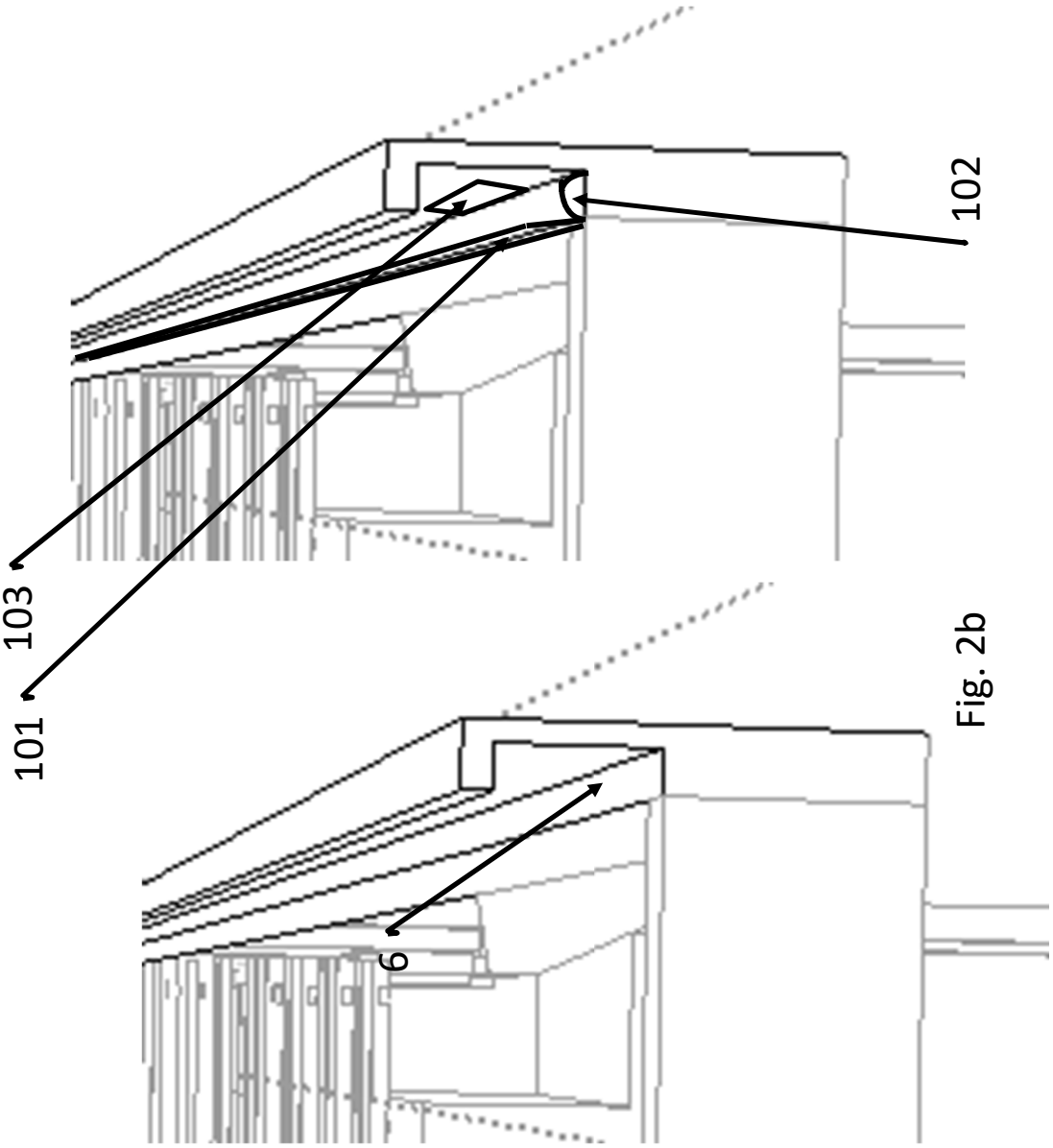

Fig. 2b

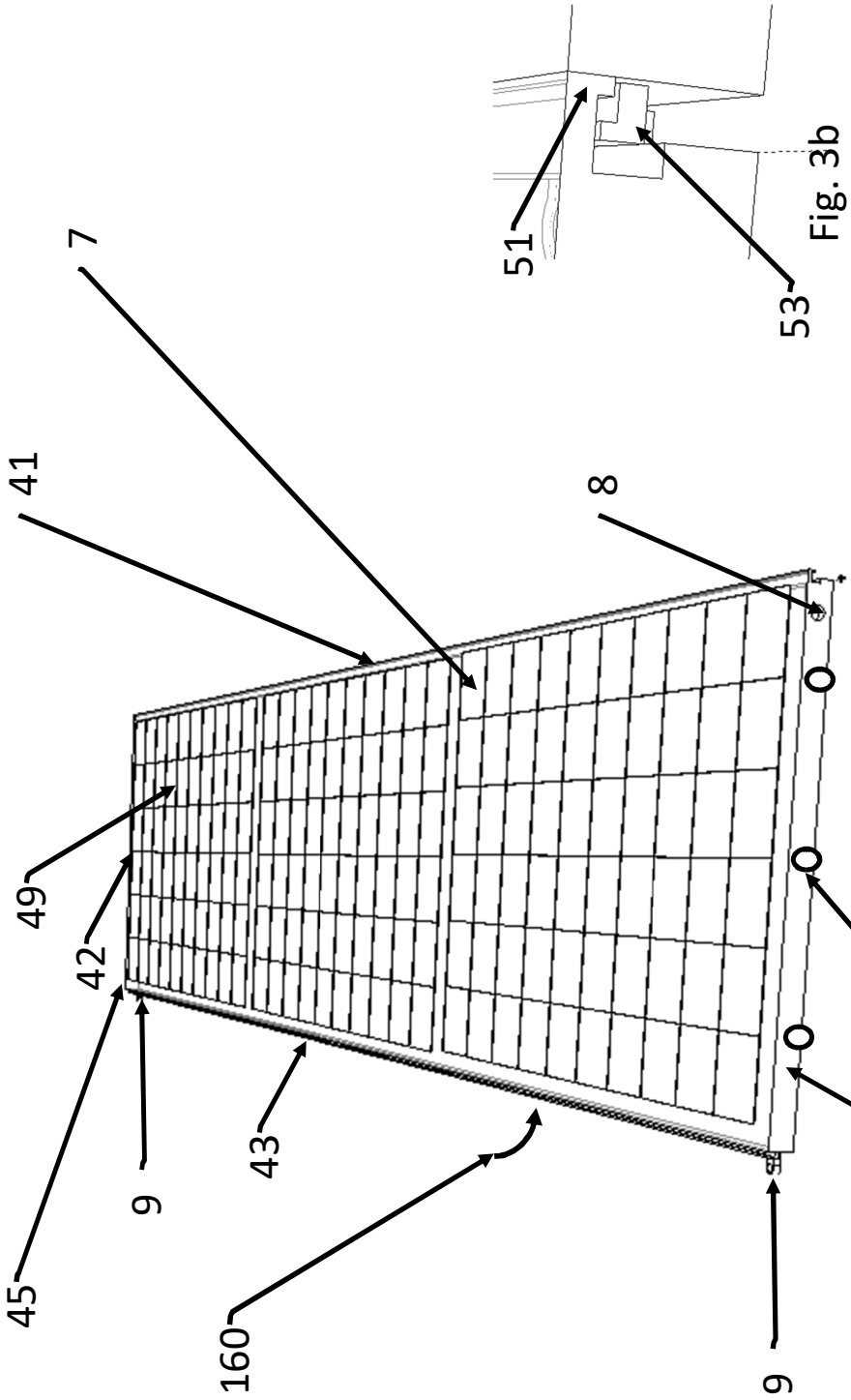

Fig. 3b

Fig. 3

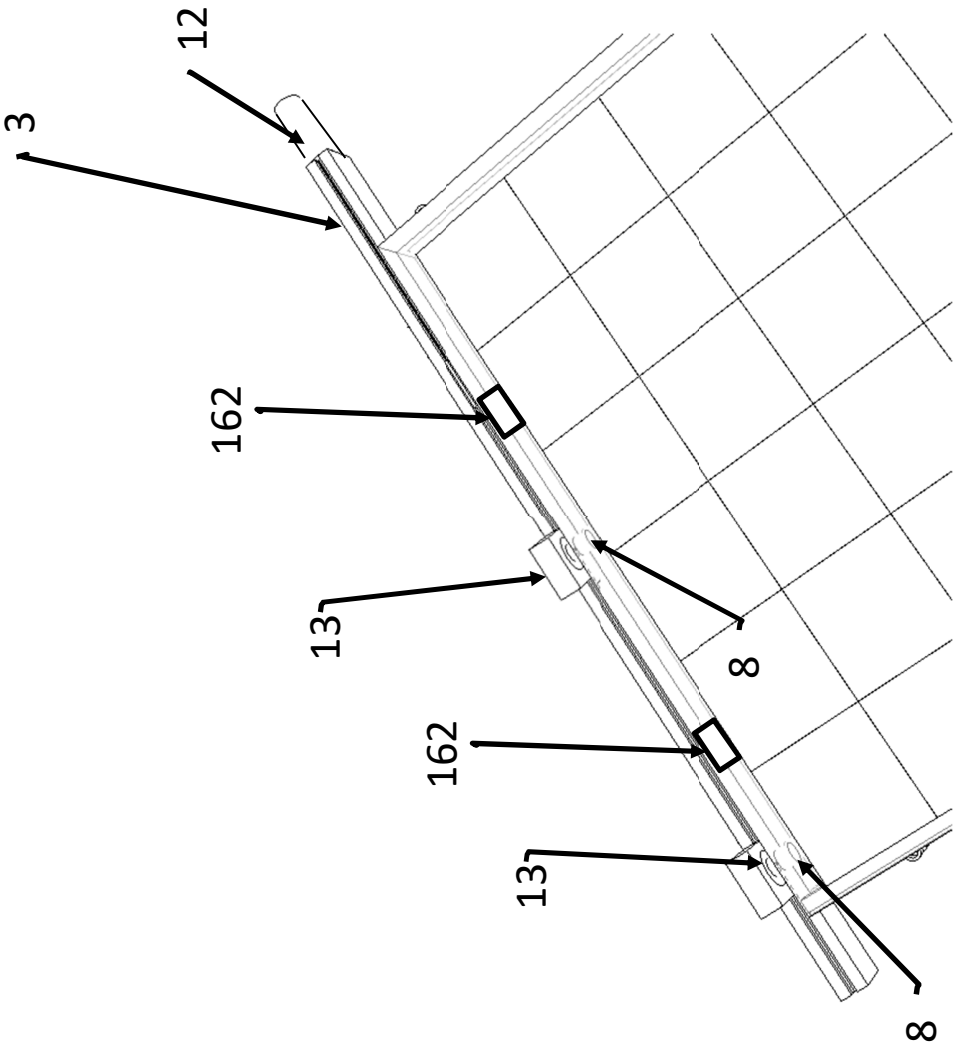

Fig. 4

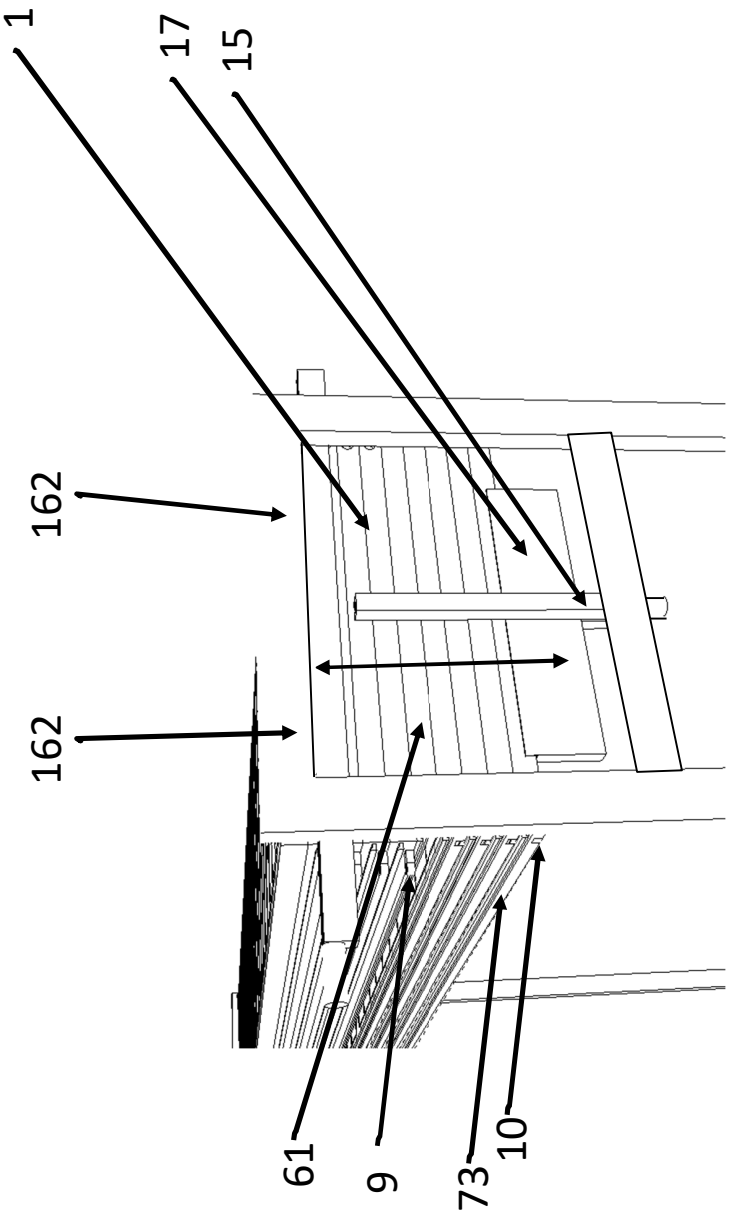

Fig. 5

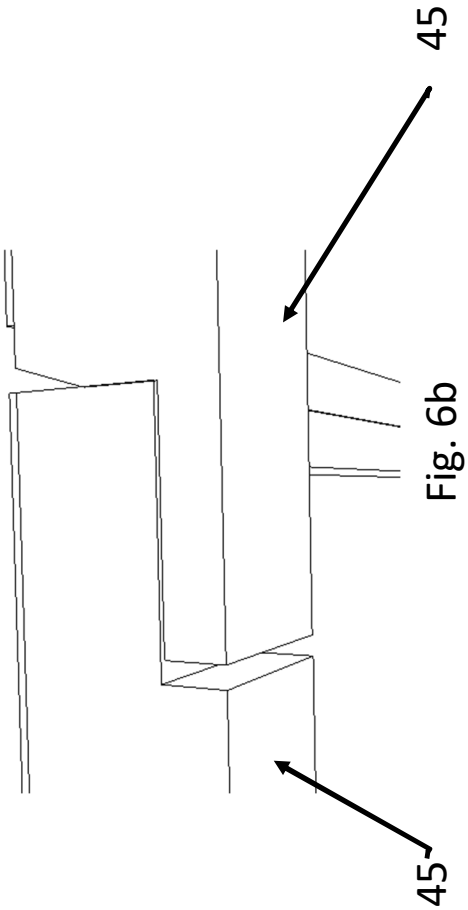

Fig. 6b

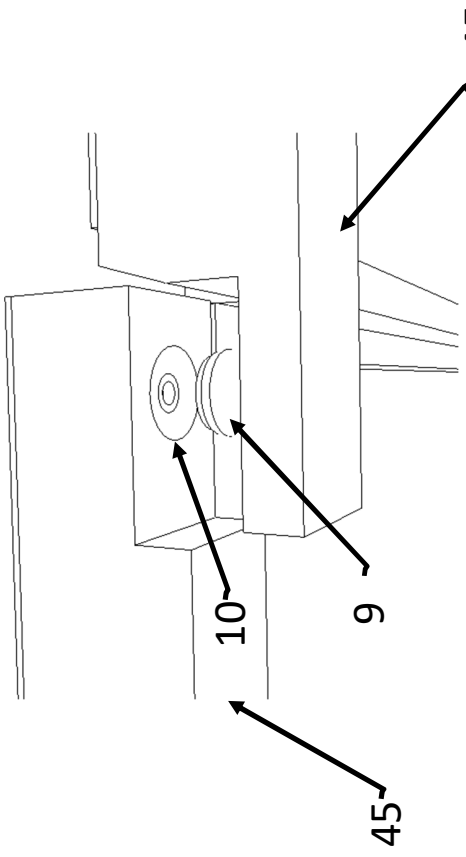

Fig. 6a

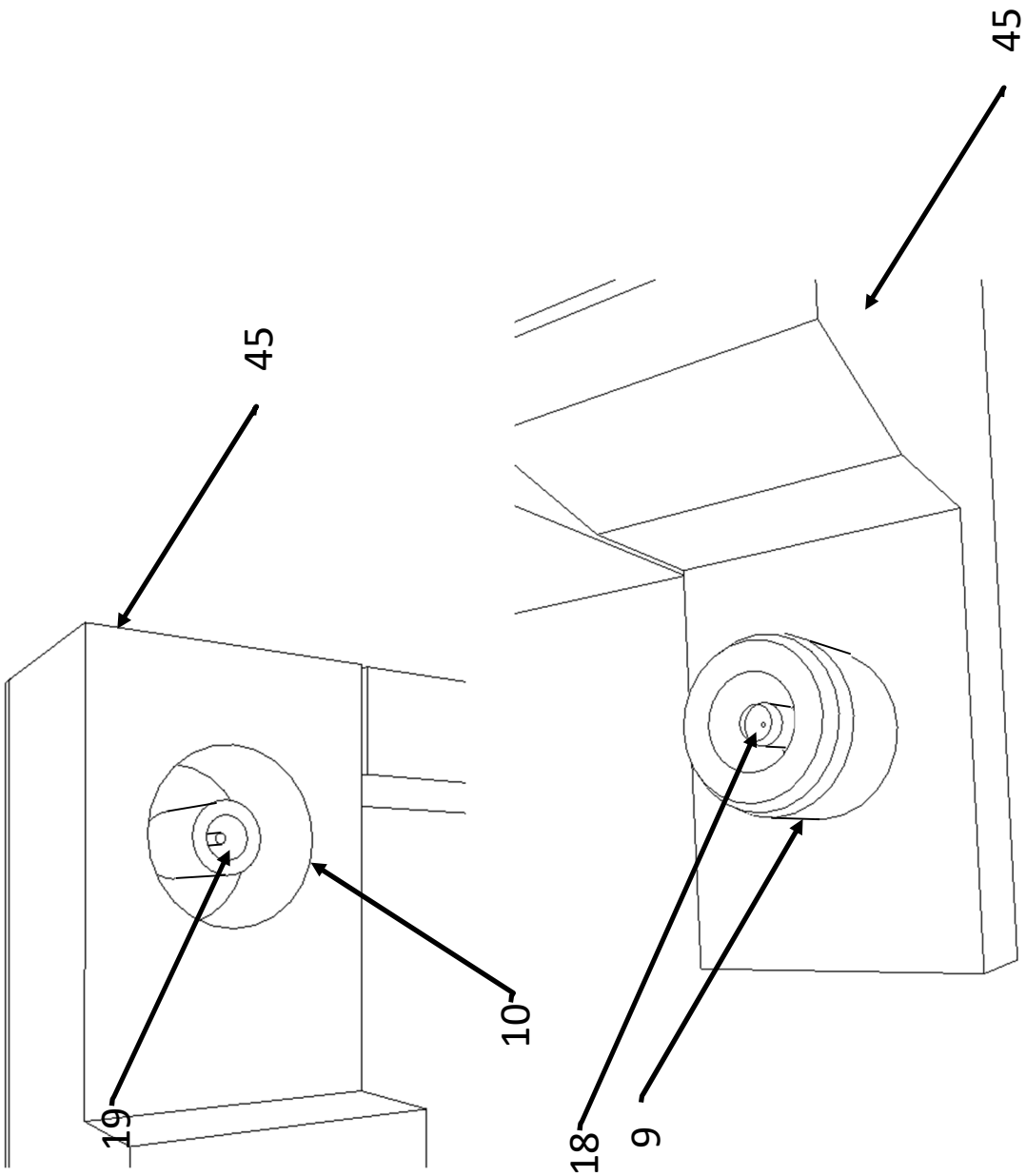

Fig. 7

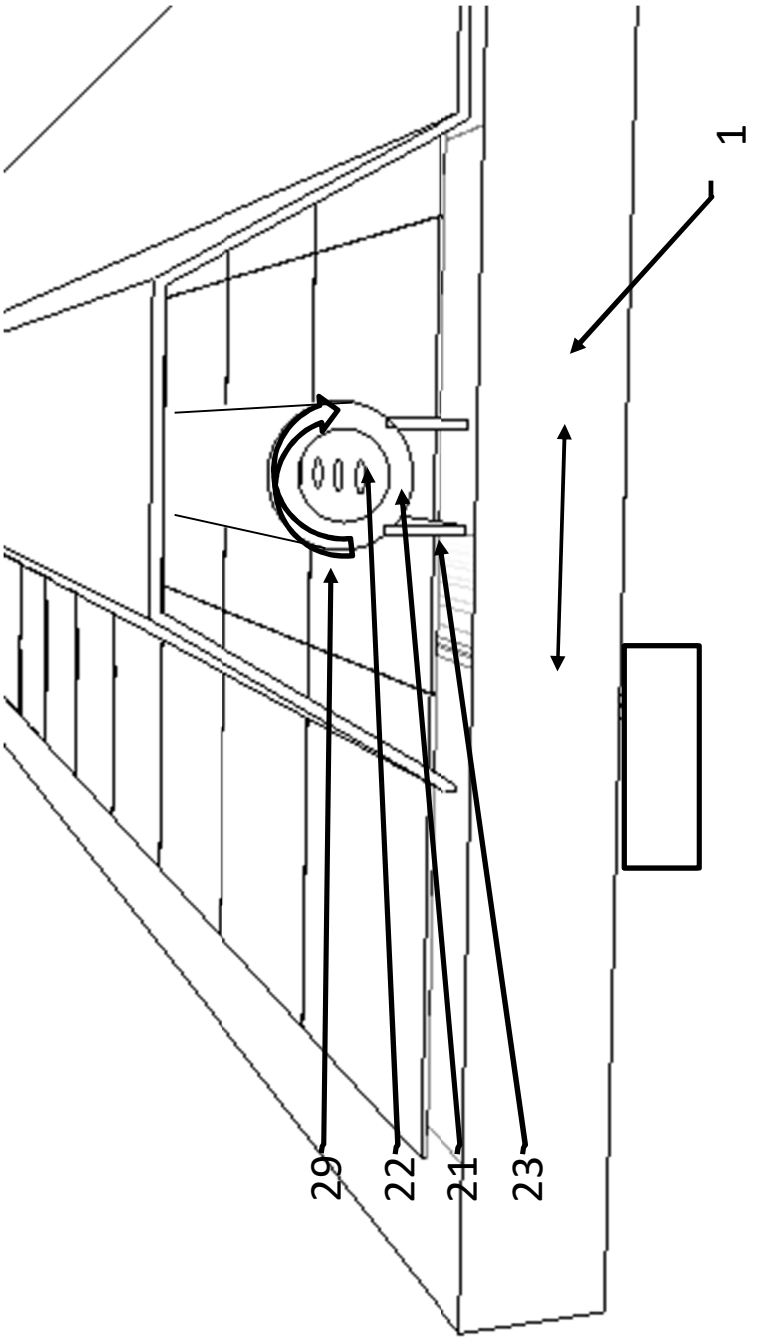

Fig. 8

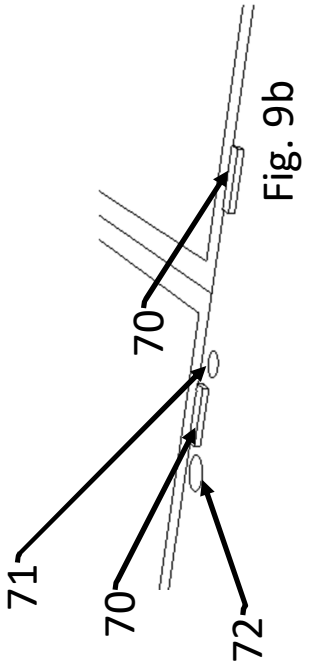

Fig. 9b

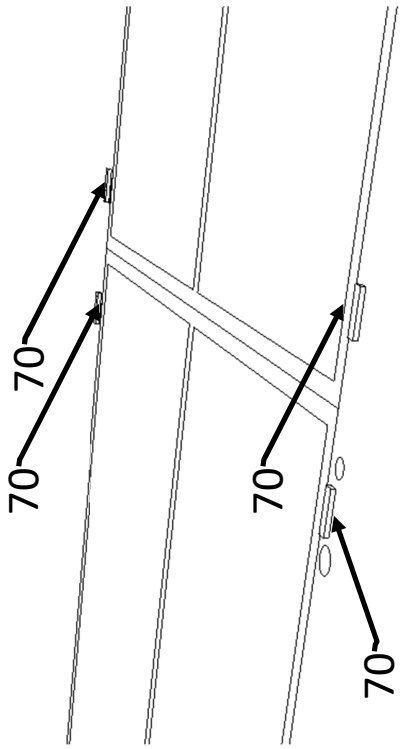

Fig. 9c

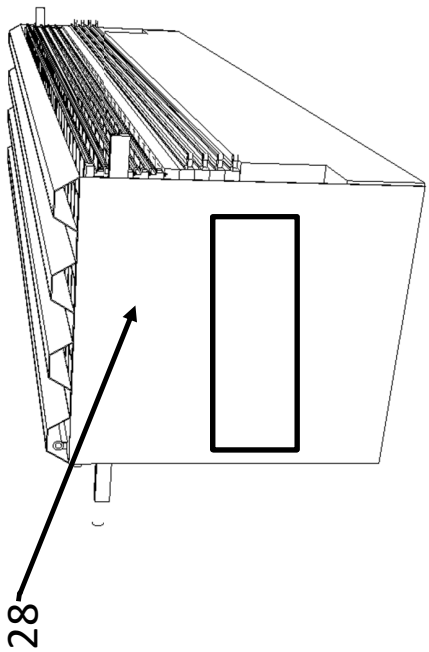

Fig. 9a

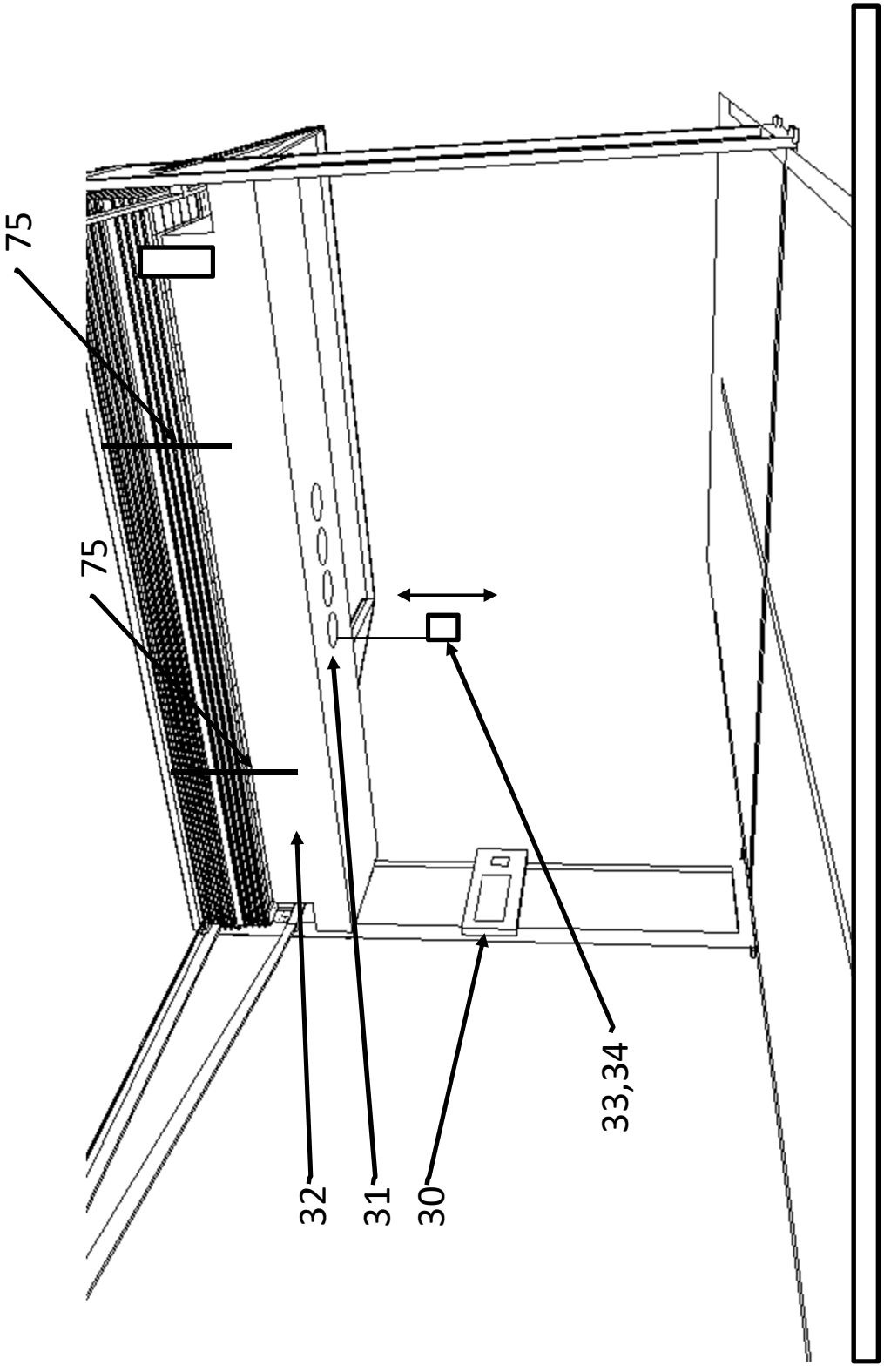

Fig. 10

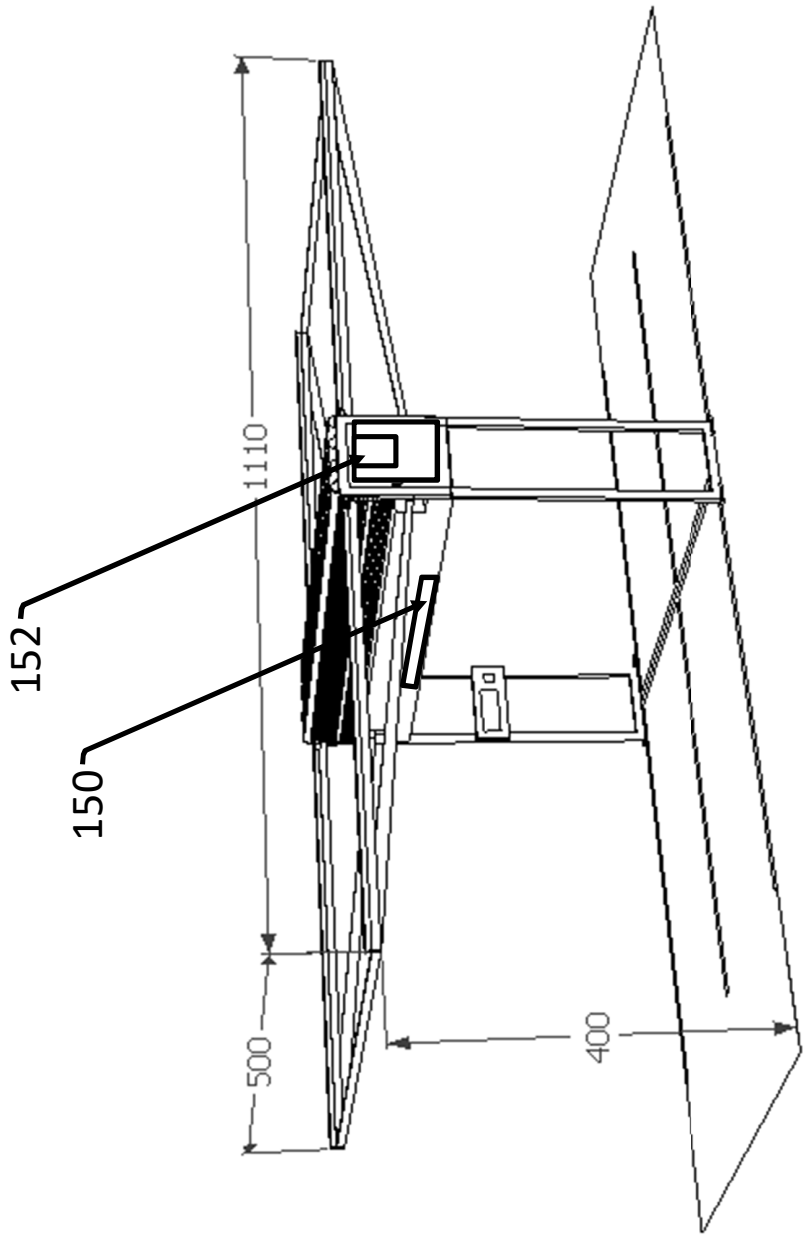

Fig. 11

Simple and fast construction of the installation

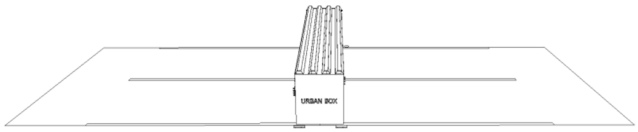

Prefabricated box at the installation site,
‘’mini’’ foundations & power connection ready

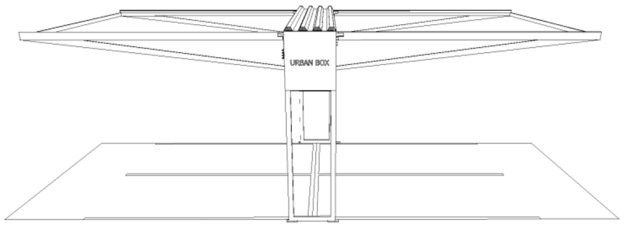

Installation of the lateral supporting elements
Lifting the box into position
Installation of the supports

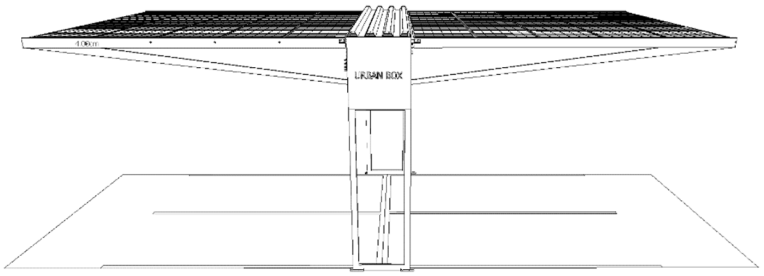

Mains connection,
In operating state

Fig. 12

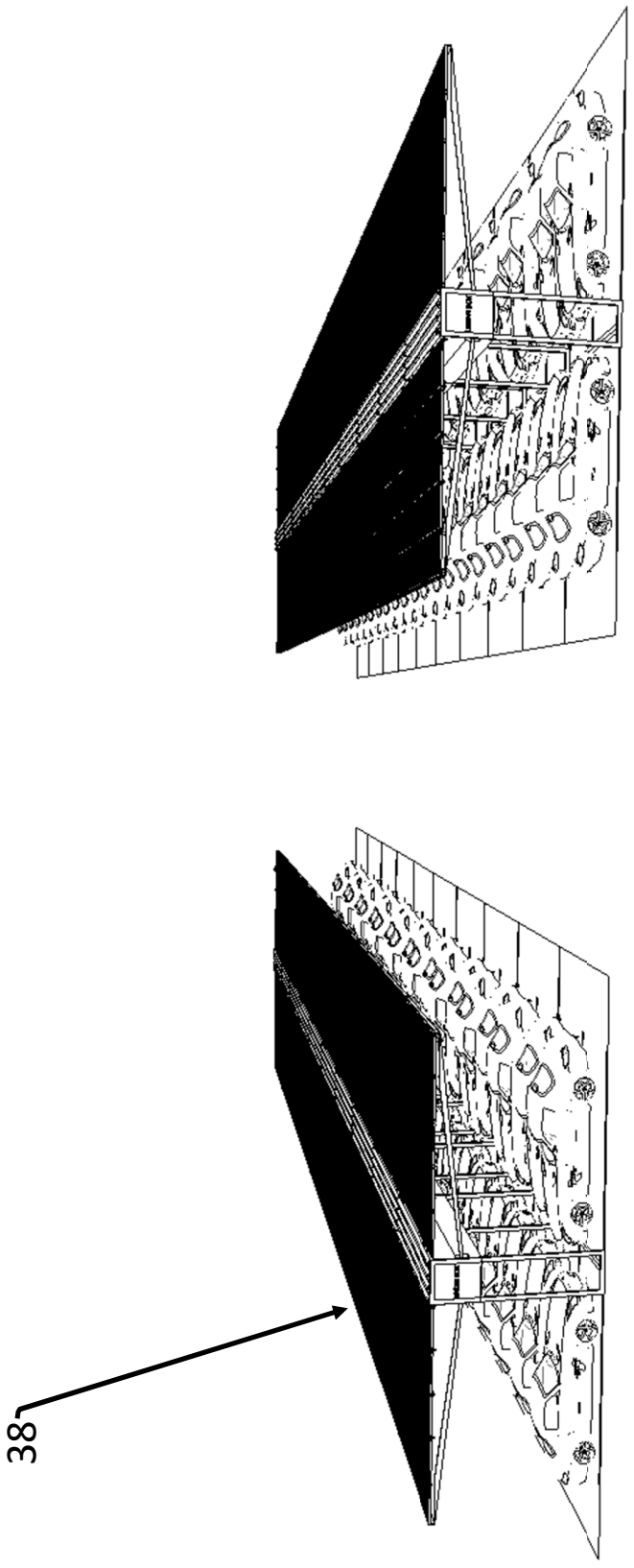

Fig. 13

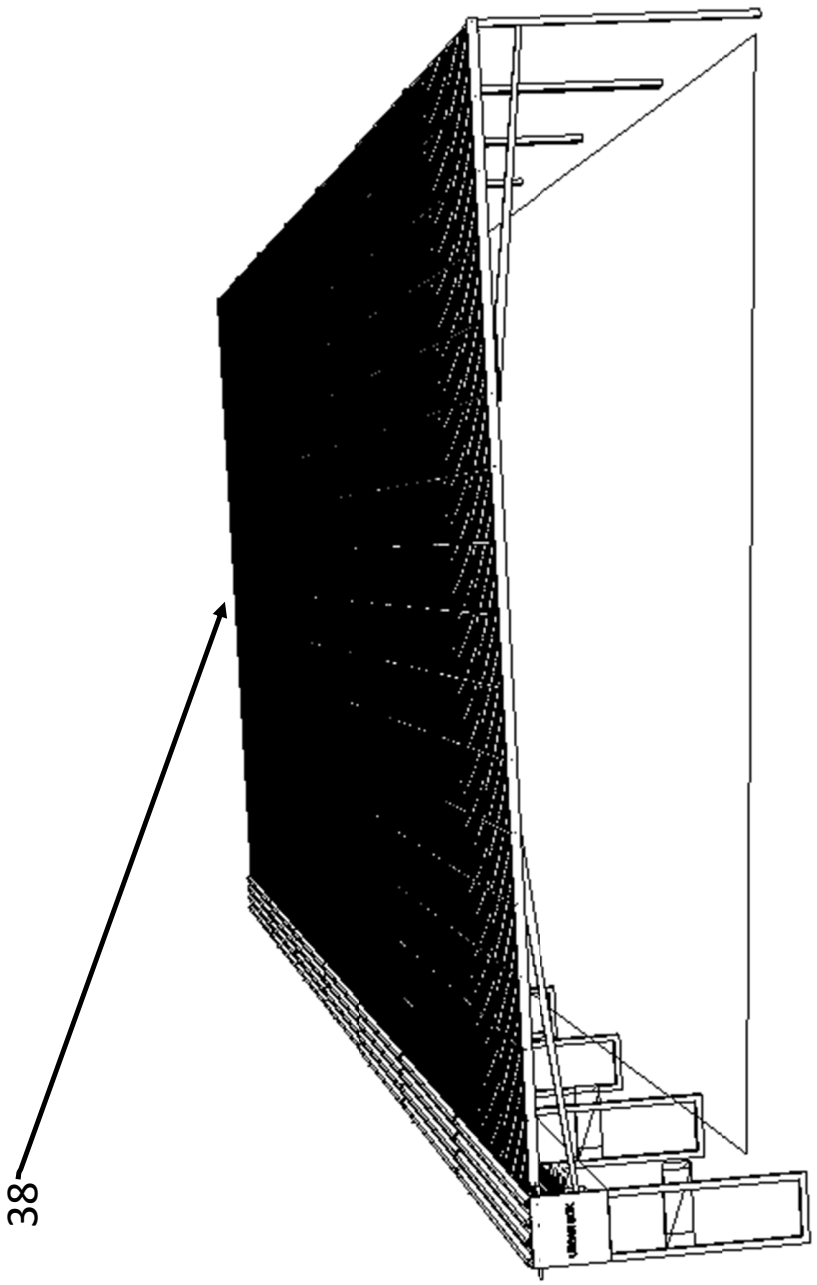

Fig. 14

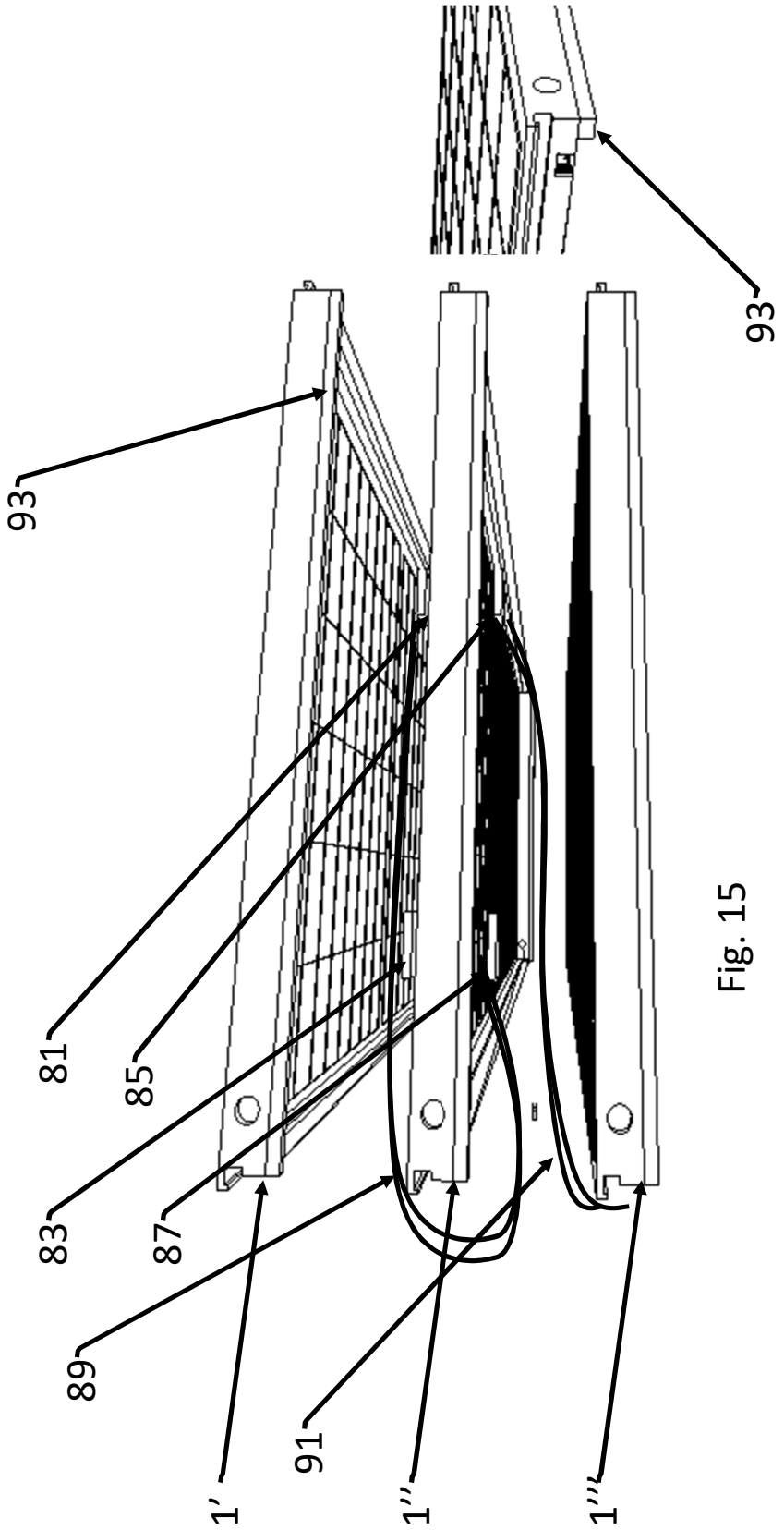

Fig. 15

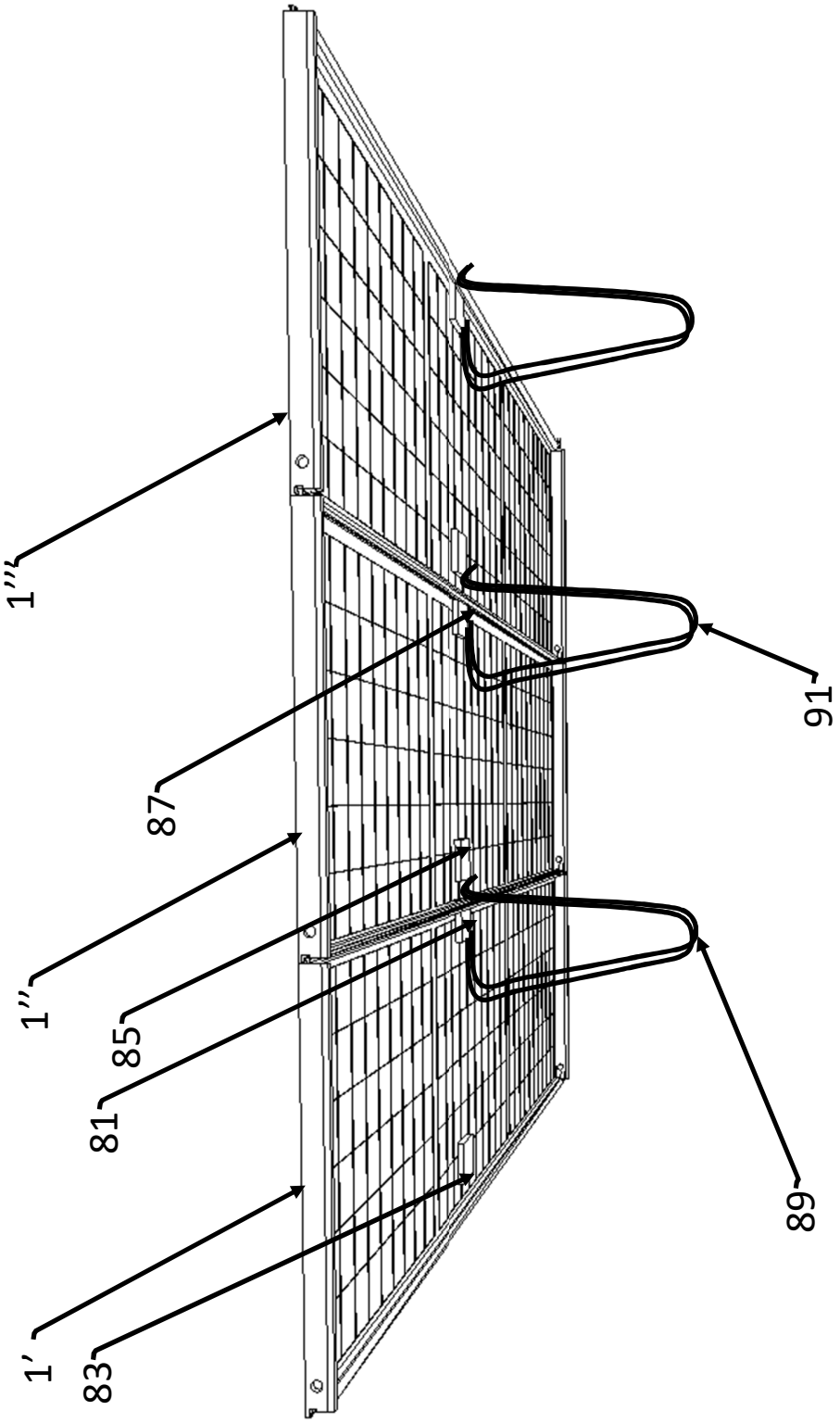

Fig. 16

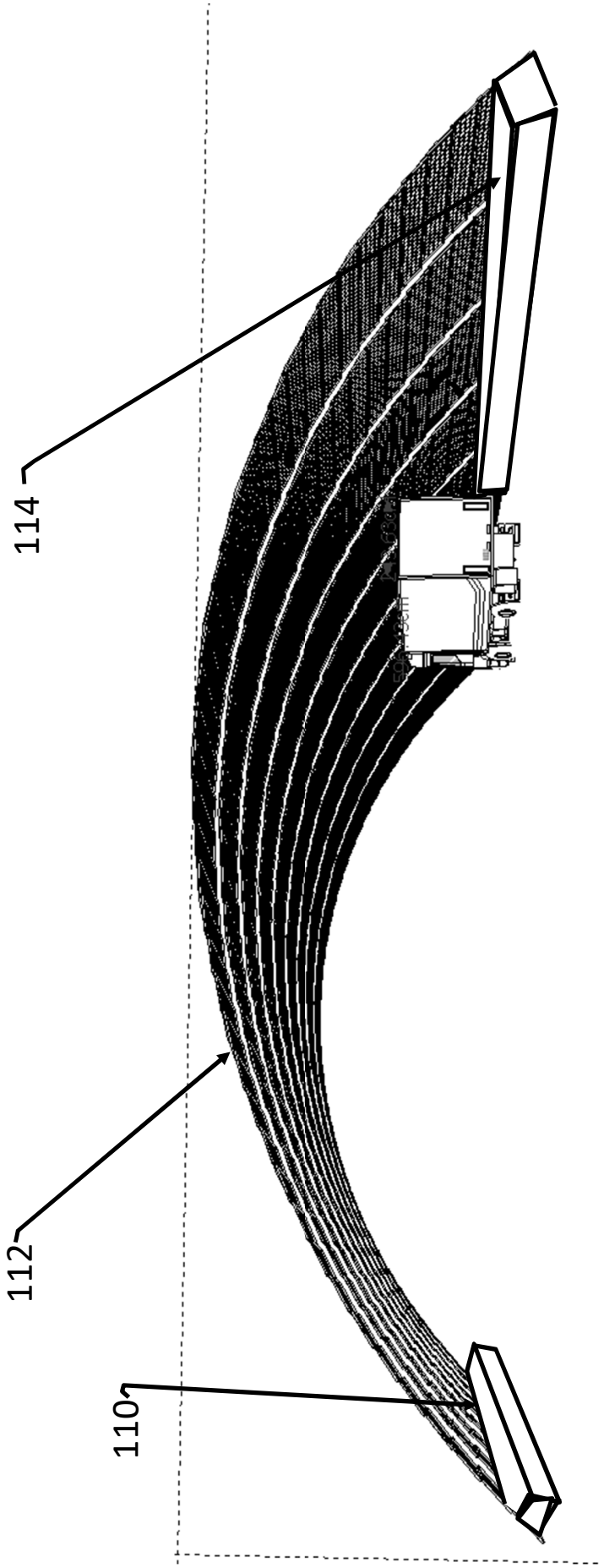

Fig. 17

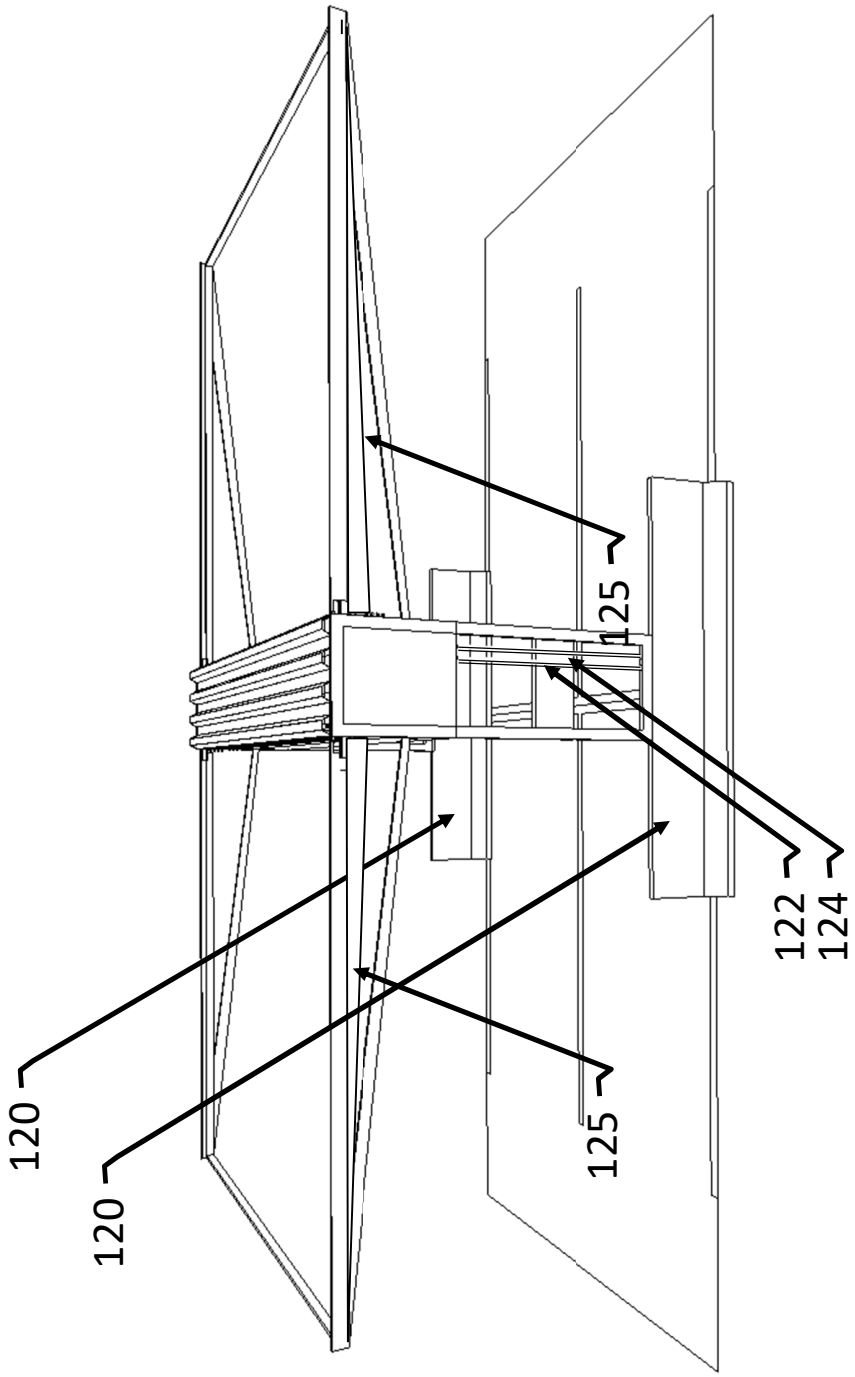

Fig. 18

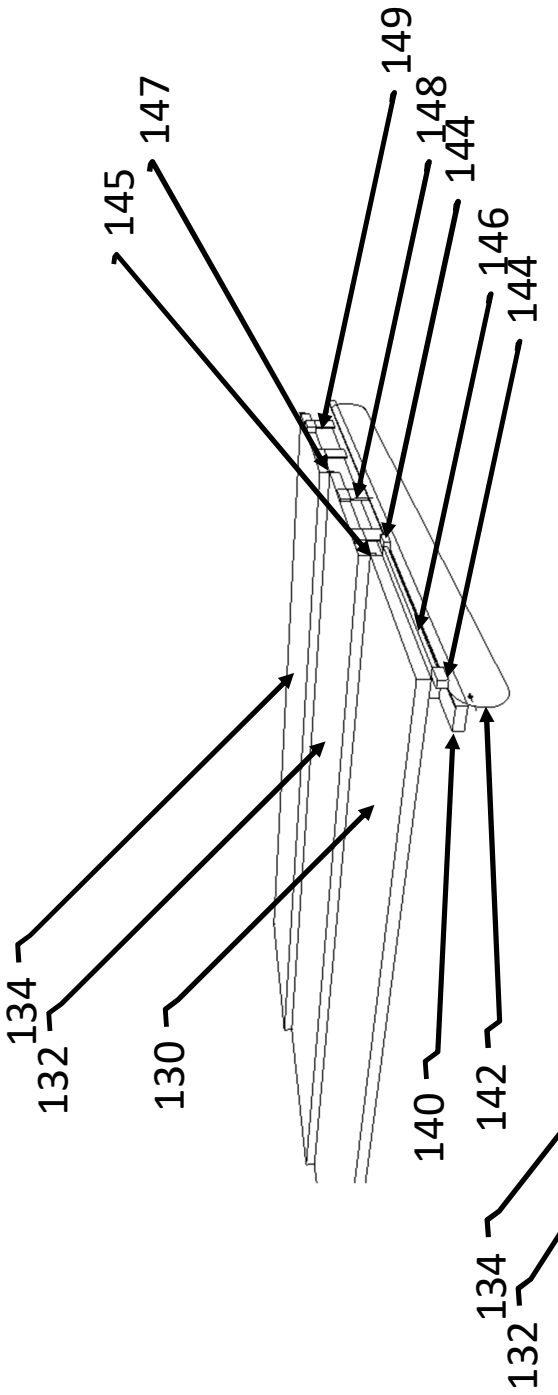

Fig. 19

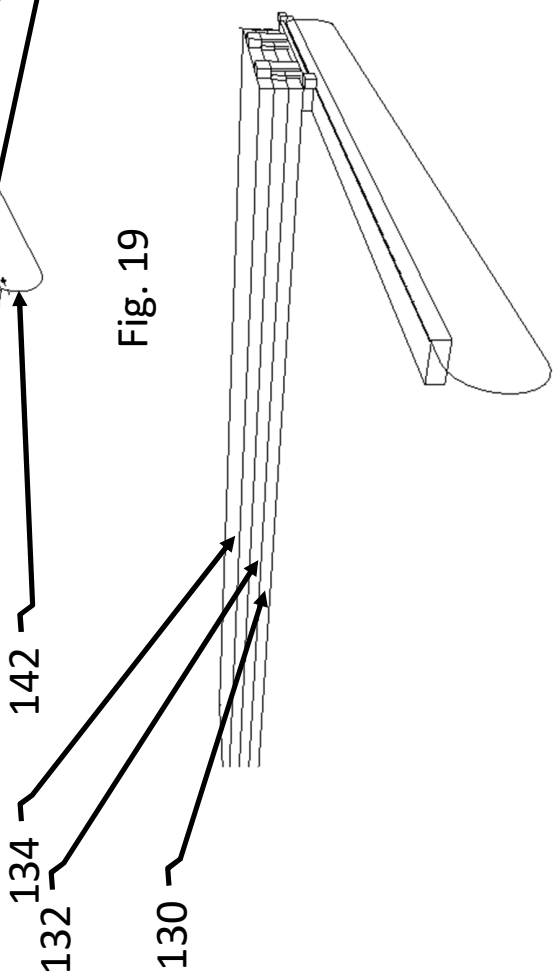

Fig. 20