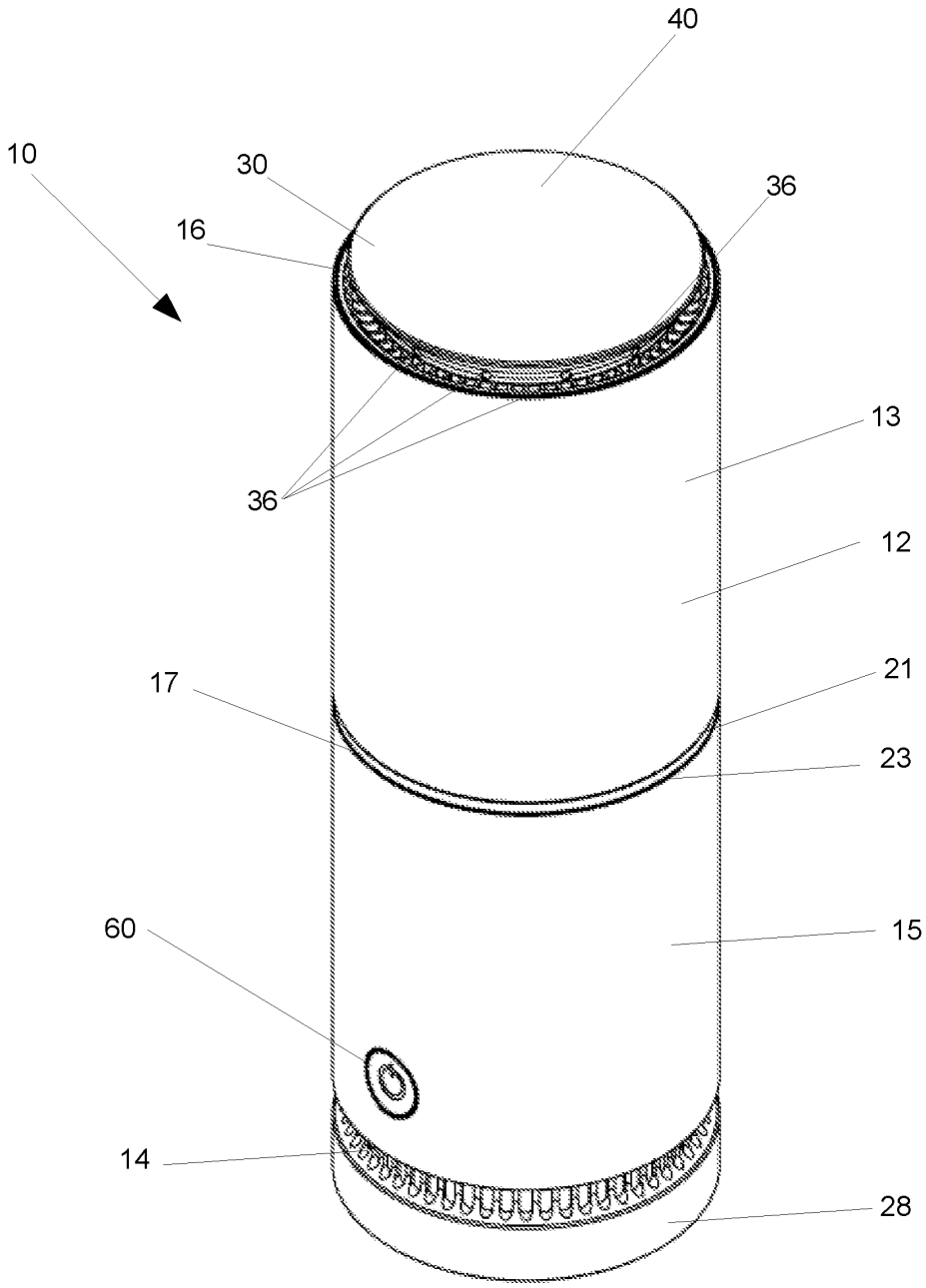

Figure 1

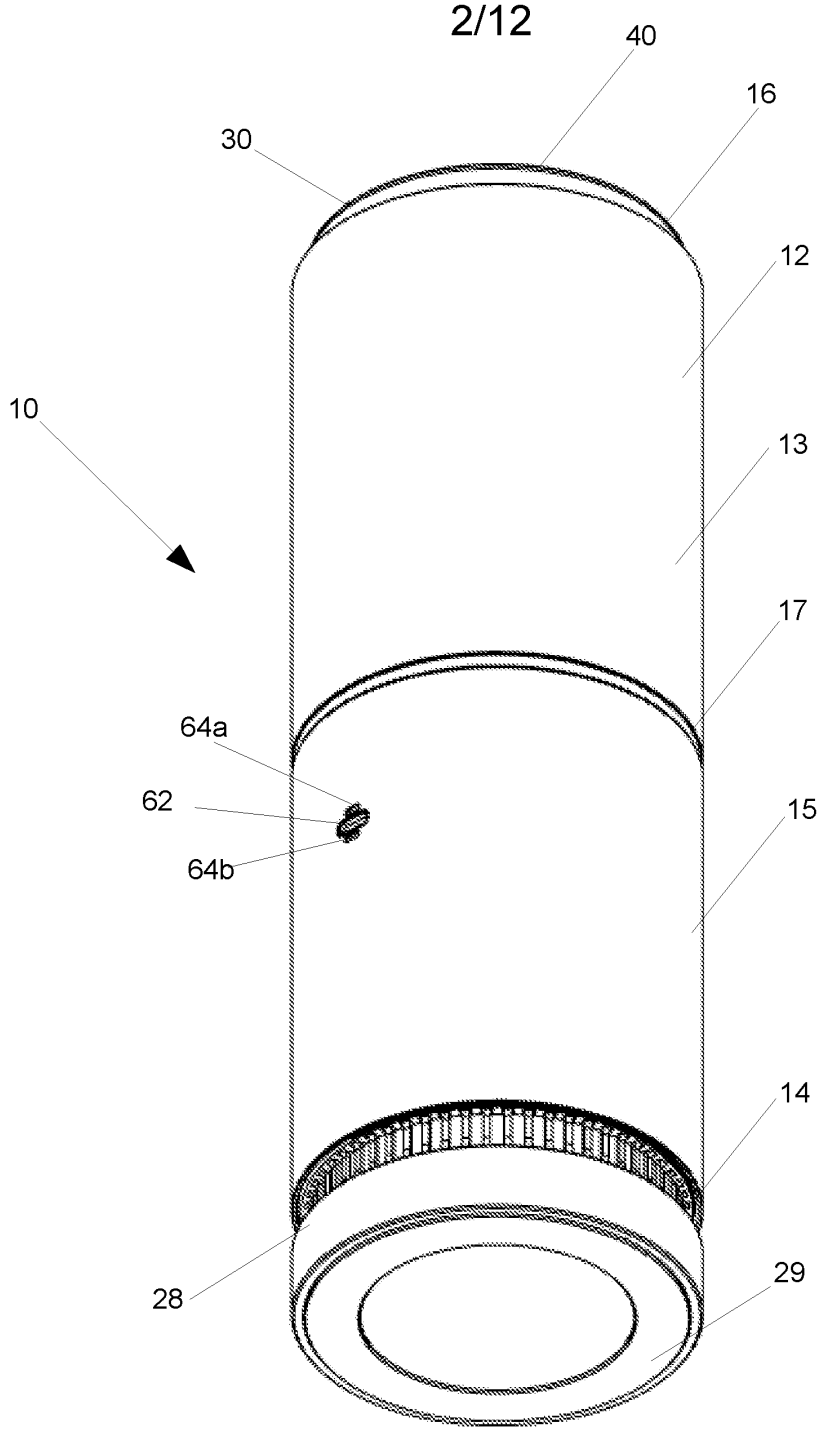

Figure 2

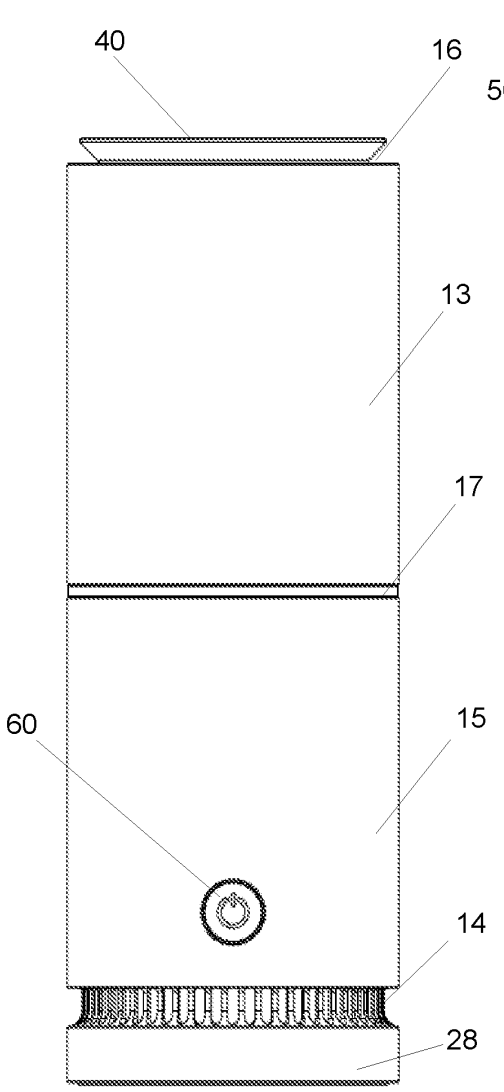

Figure 3

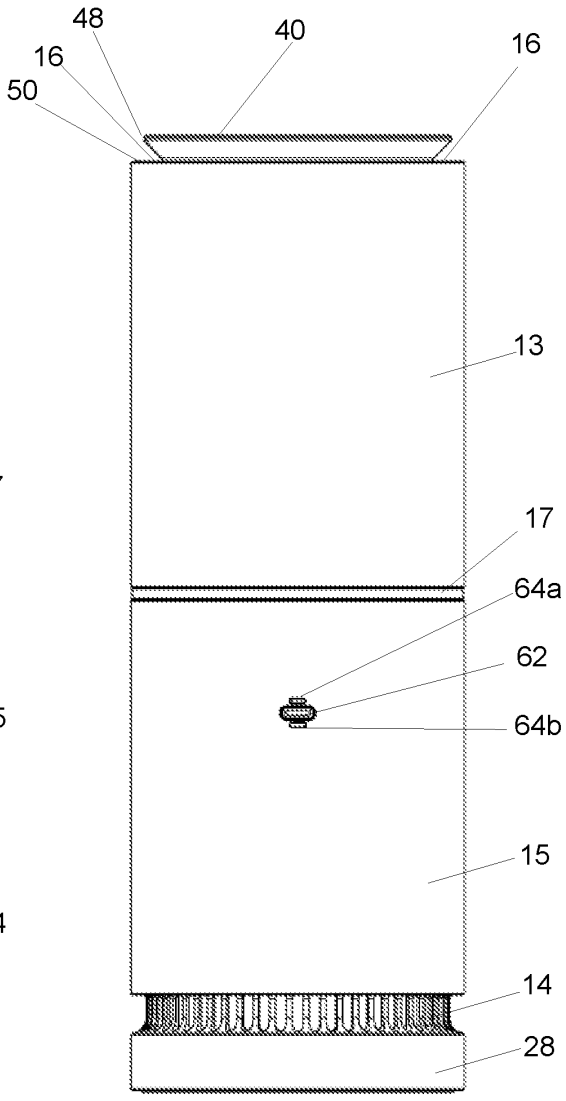

Figure 4

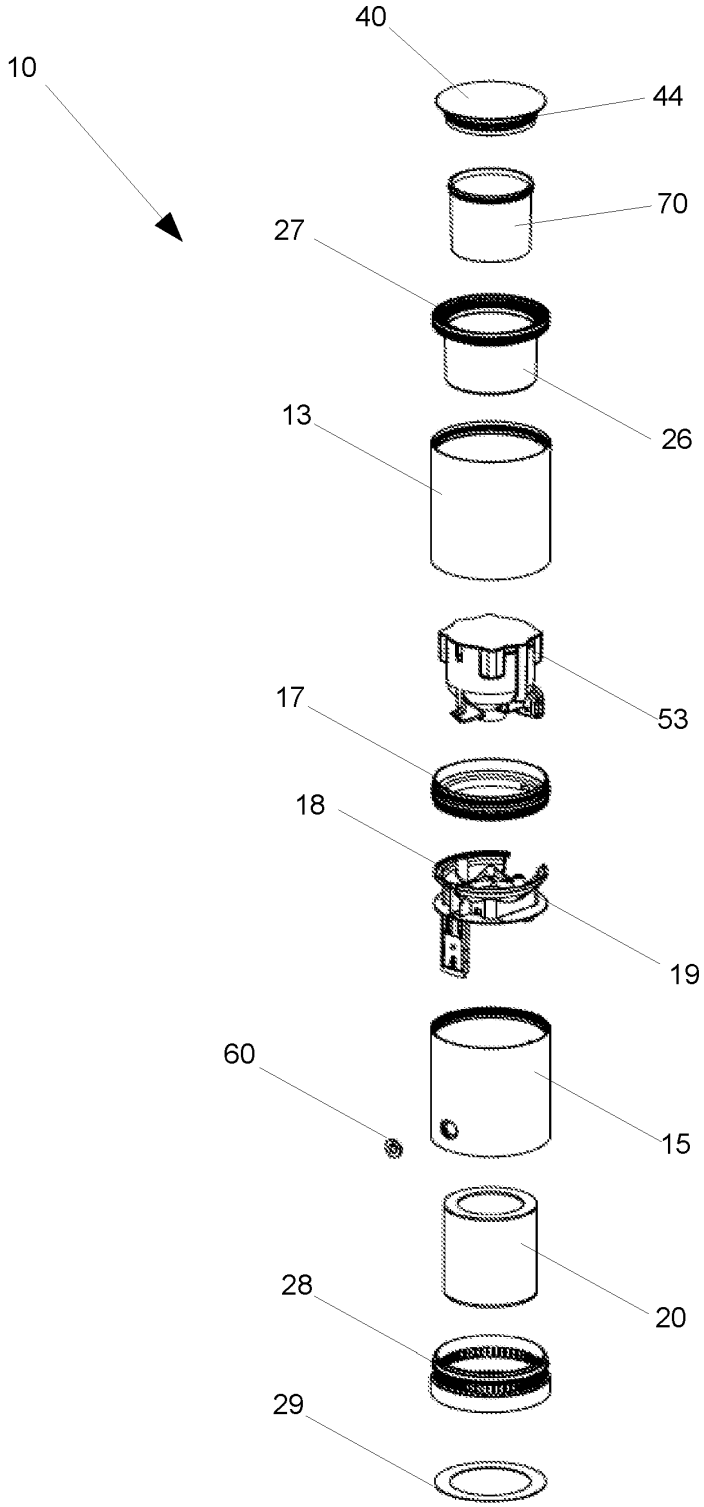

Figure 5

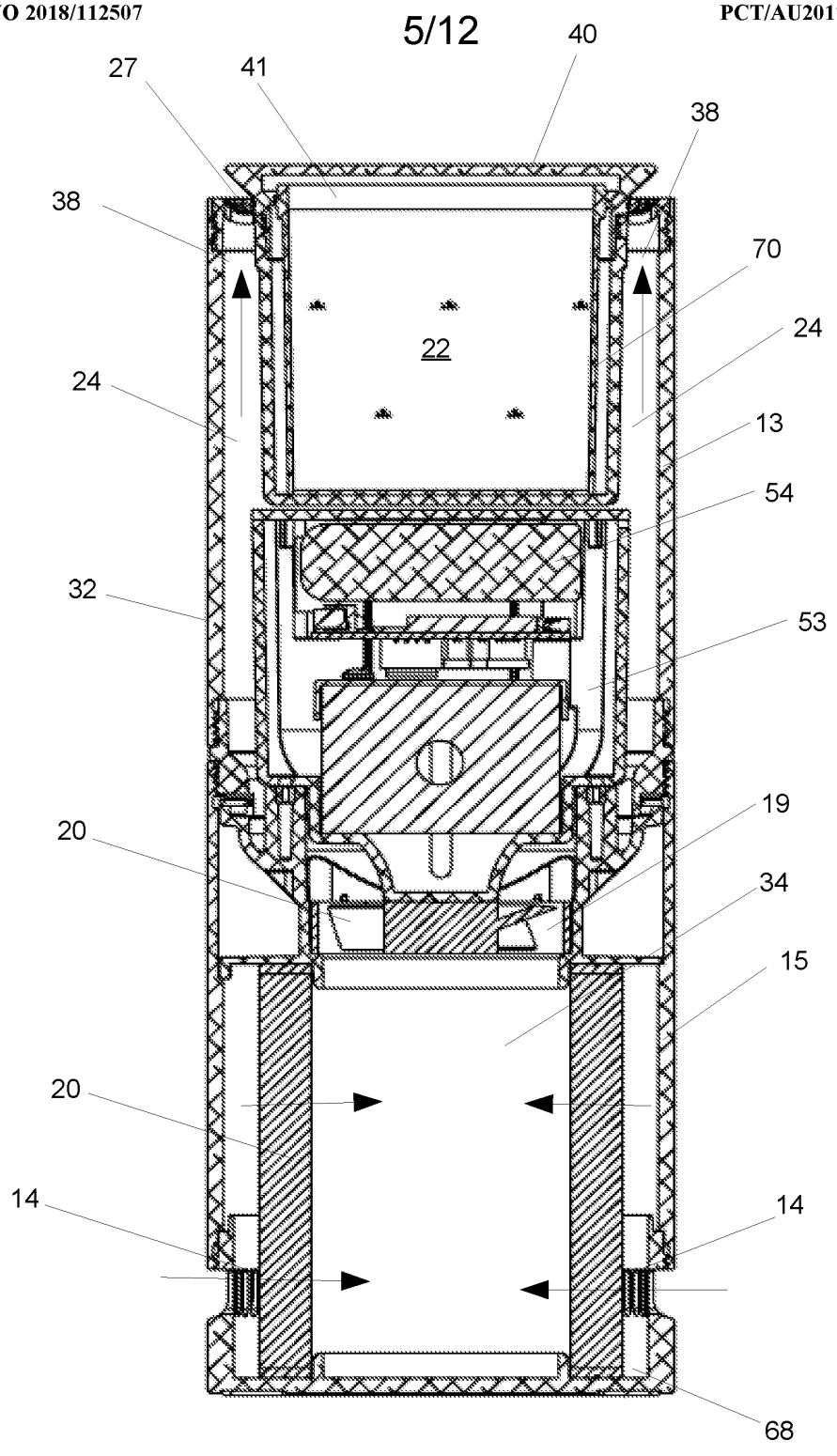

Figure 6

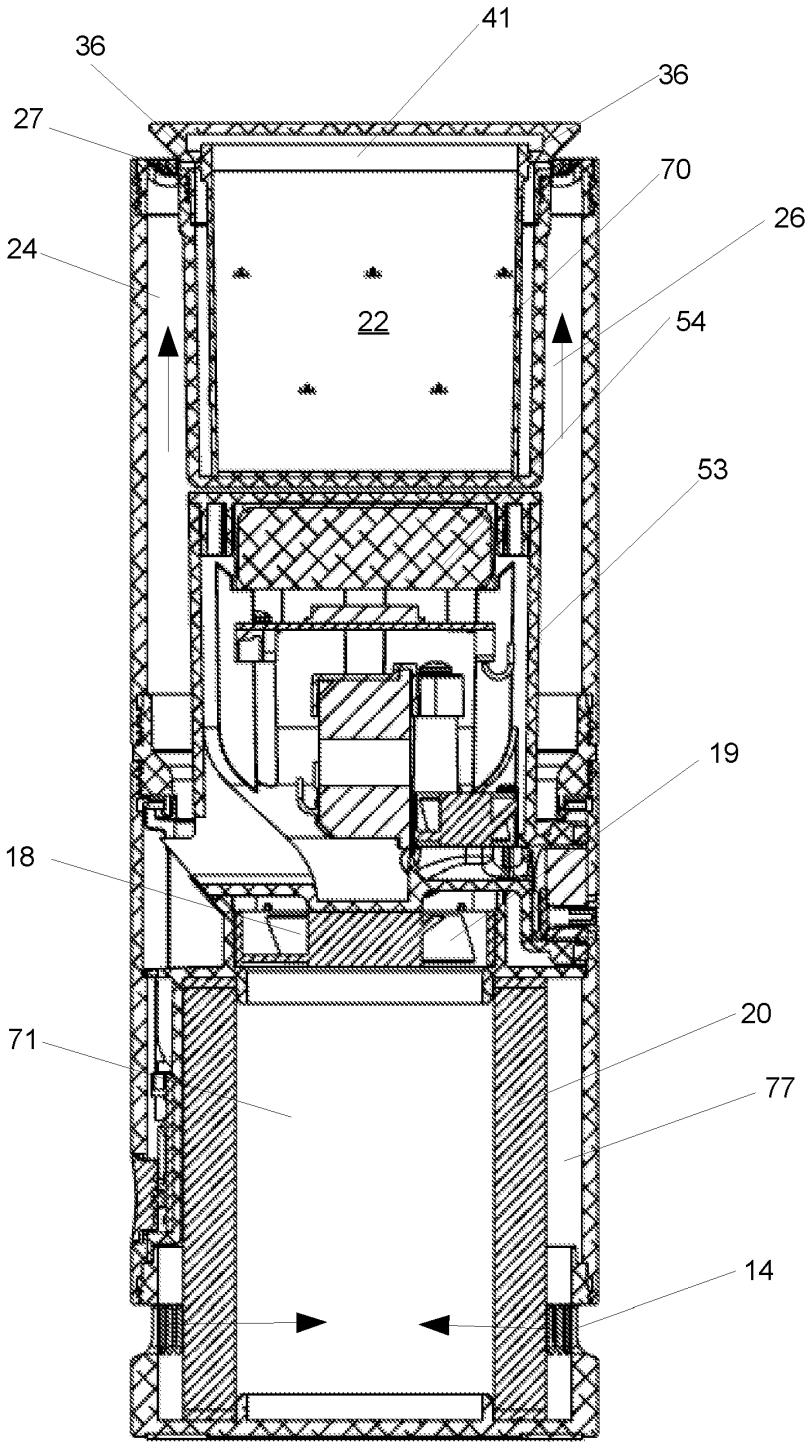

Figure 7

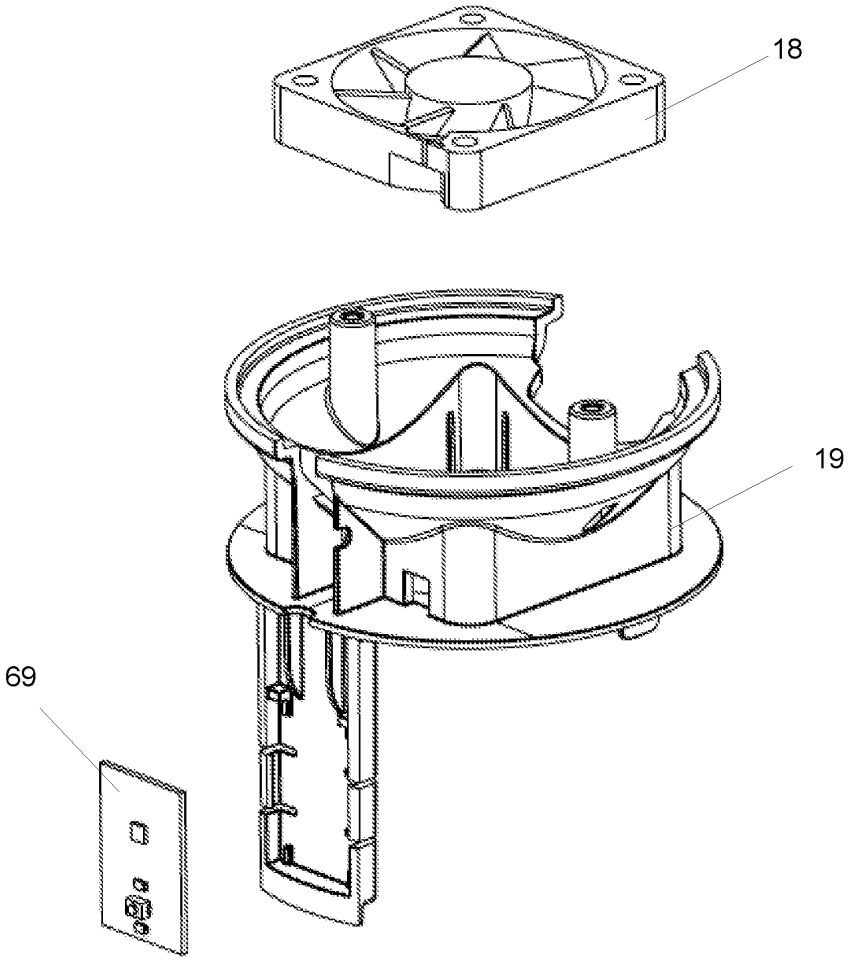

Figure 8

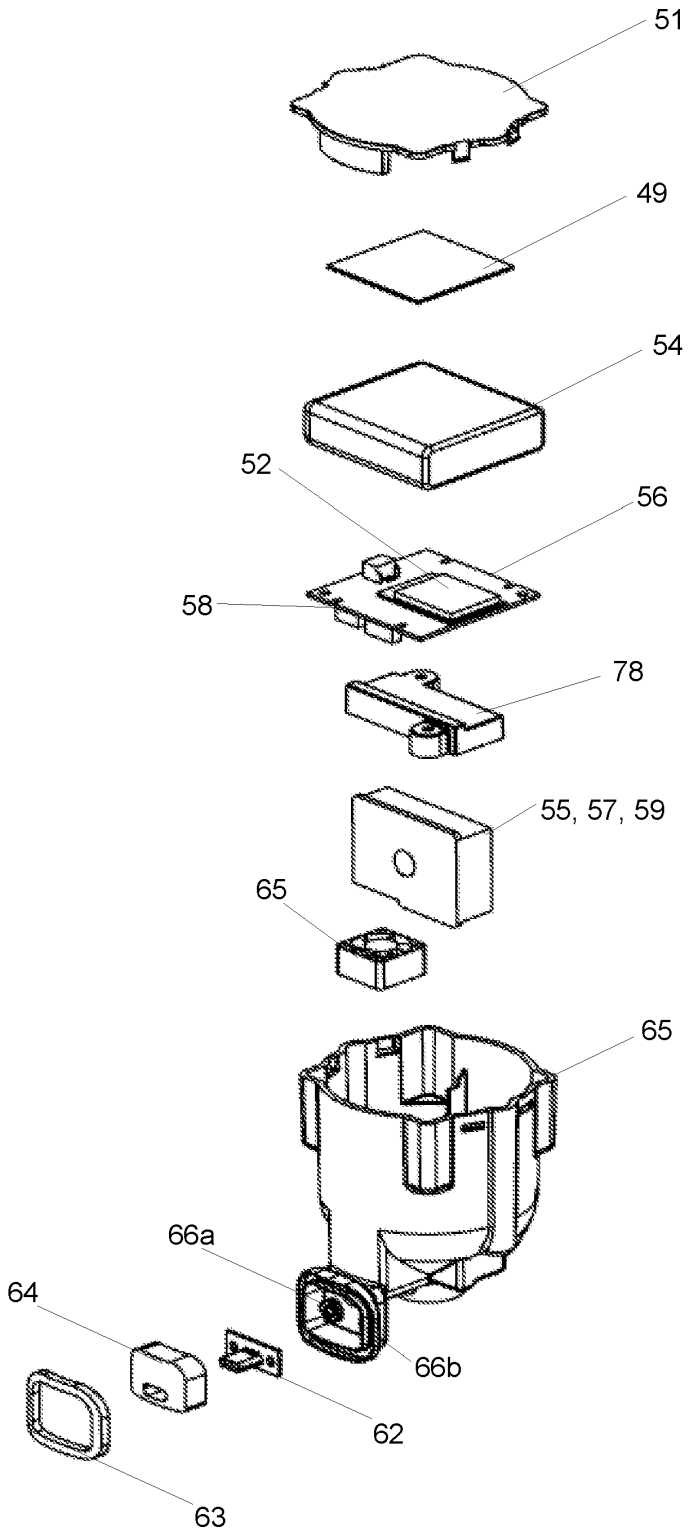

Figure 9

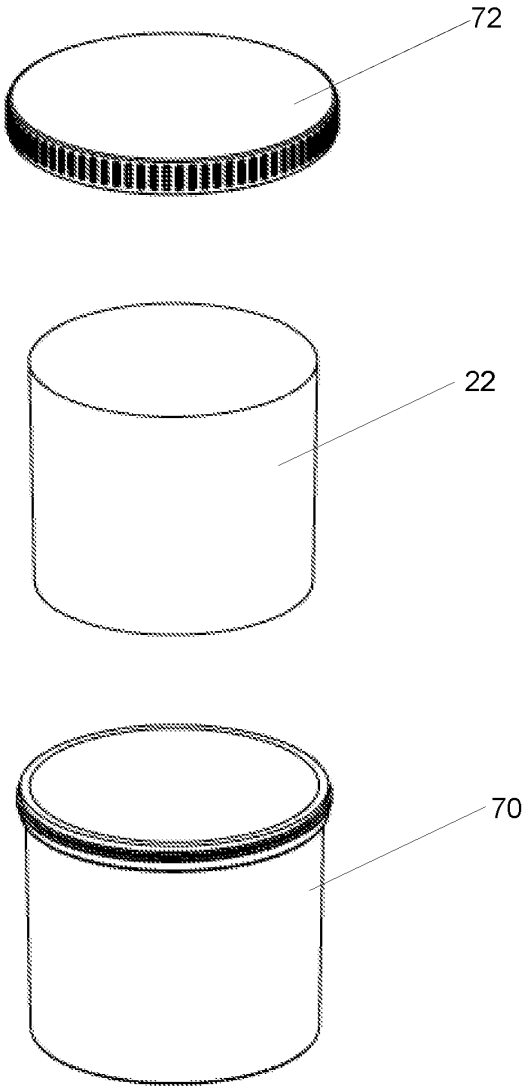

Figure 10a

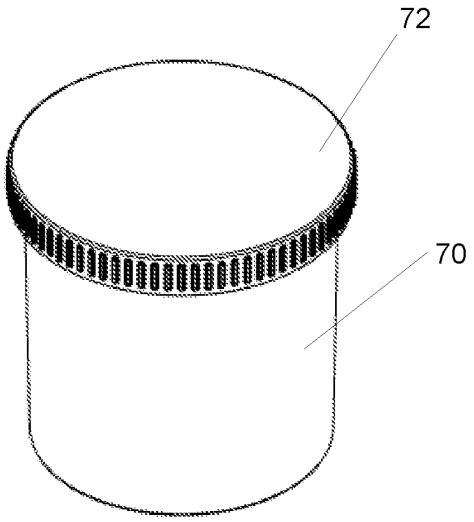

Figure 10b

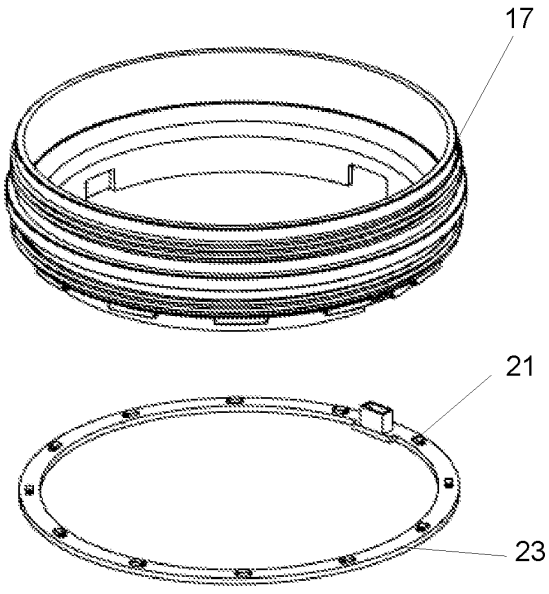

Figure 11

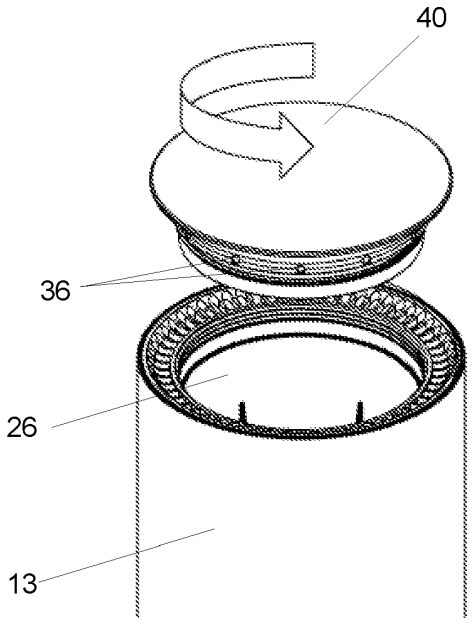

Figure 12a

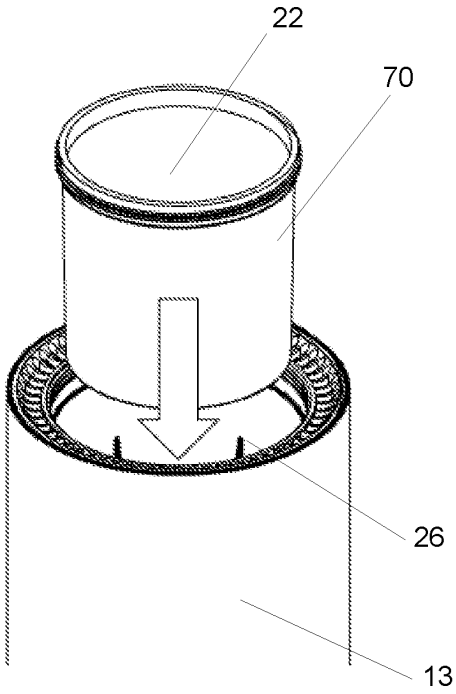

Figure 12b

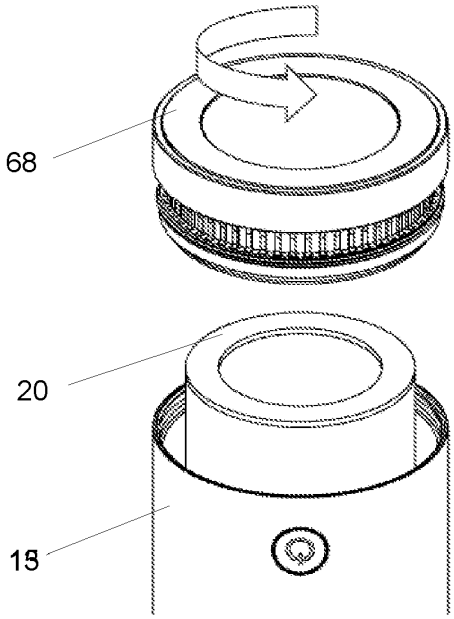

Figure 13a

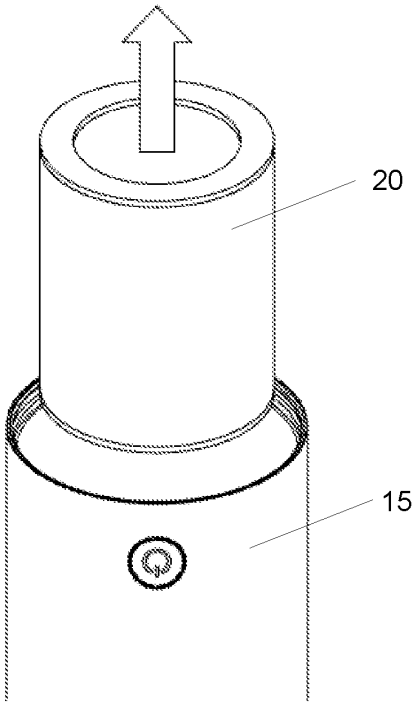

Figure 13b

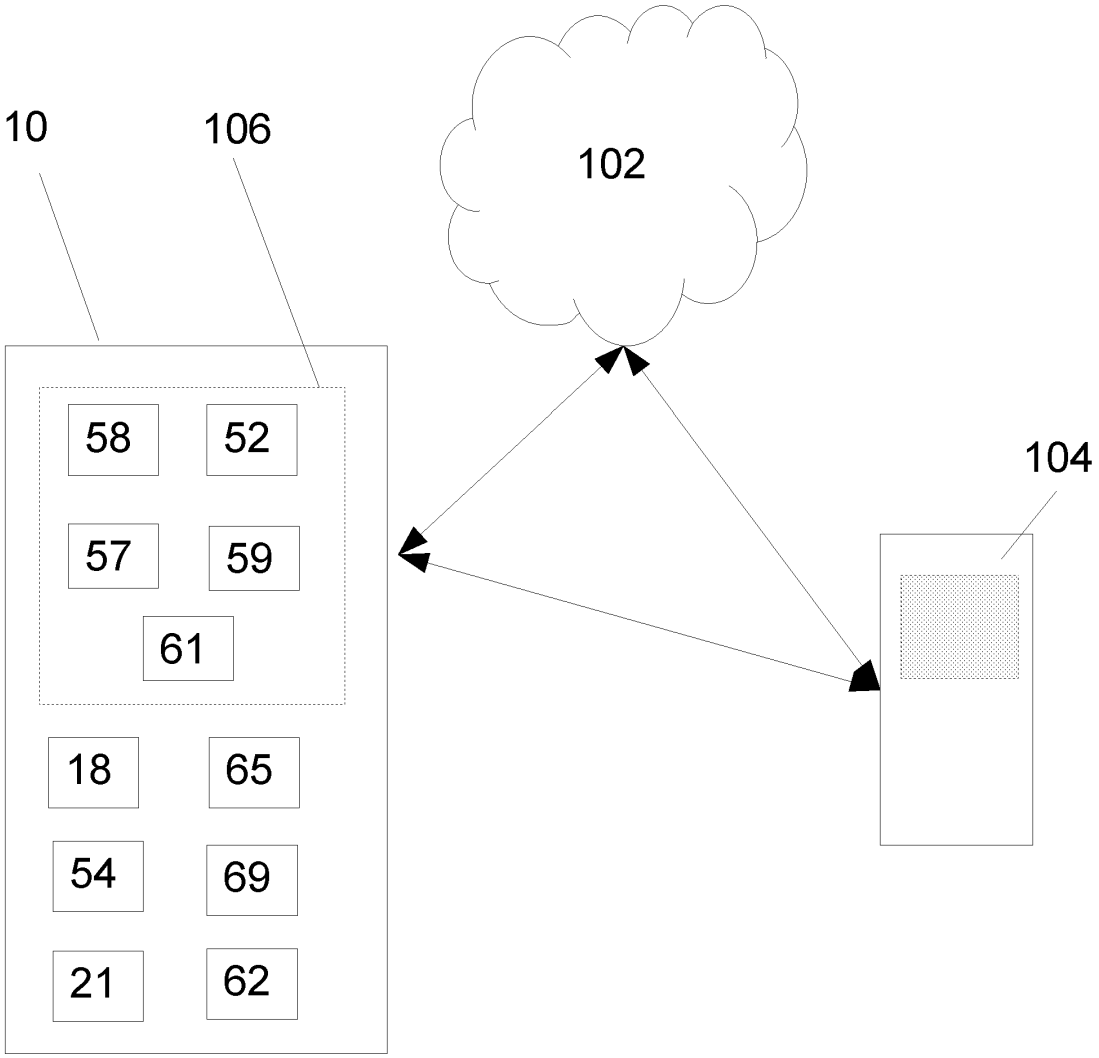

Figure 14