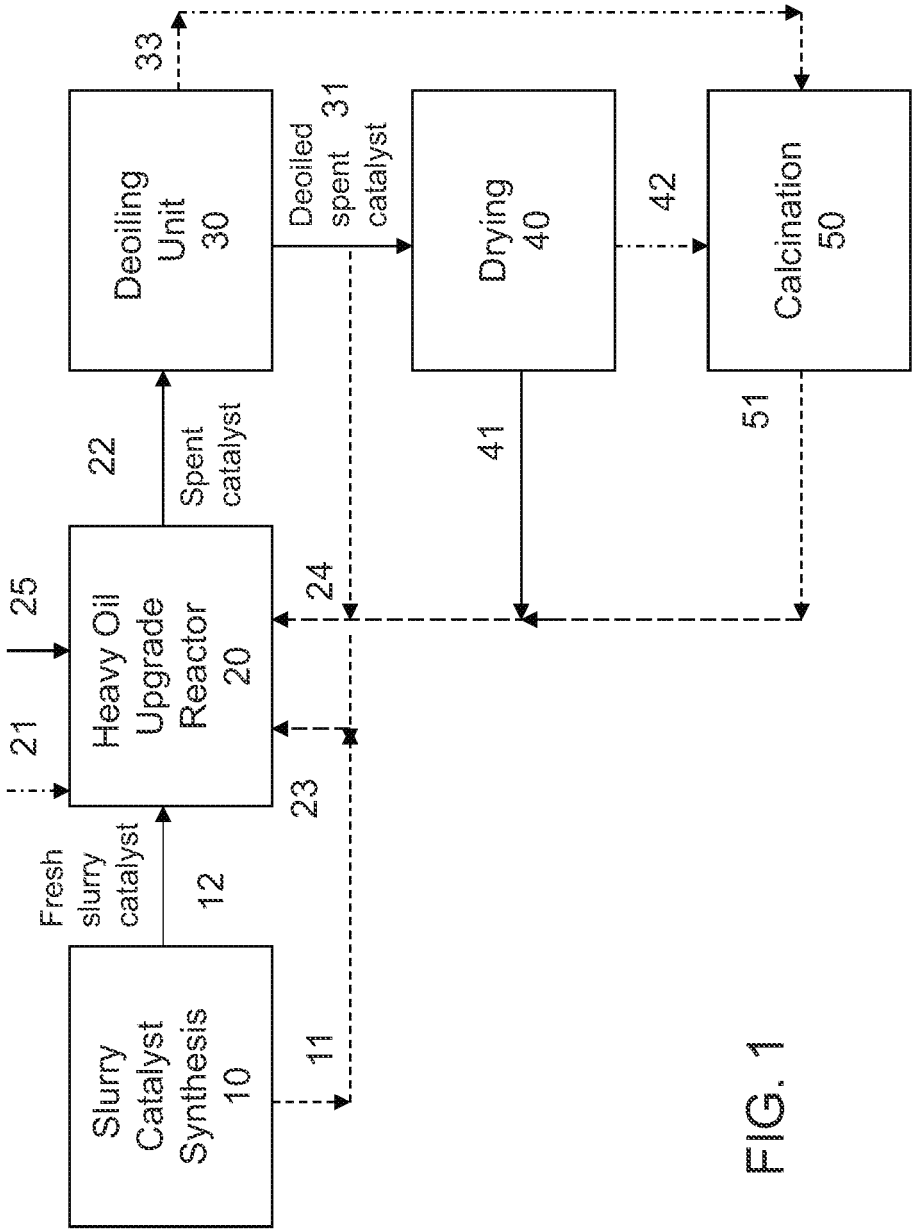
Slurry Catalyst Synthesis 10
Heavy Oil Upgrade Reactor 20
Deoiling Unit 30
Drying 40
Calcination 50
Fresh slurry catalyst
12
Spent catalyst
22
Deoiled spent catalyst
31
11
21
25
23
24
33
41
42
51

FIG. 1

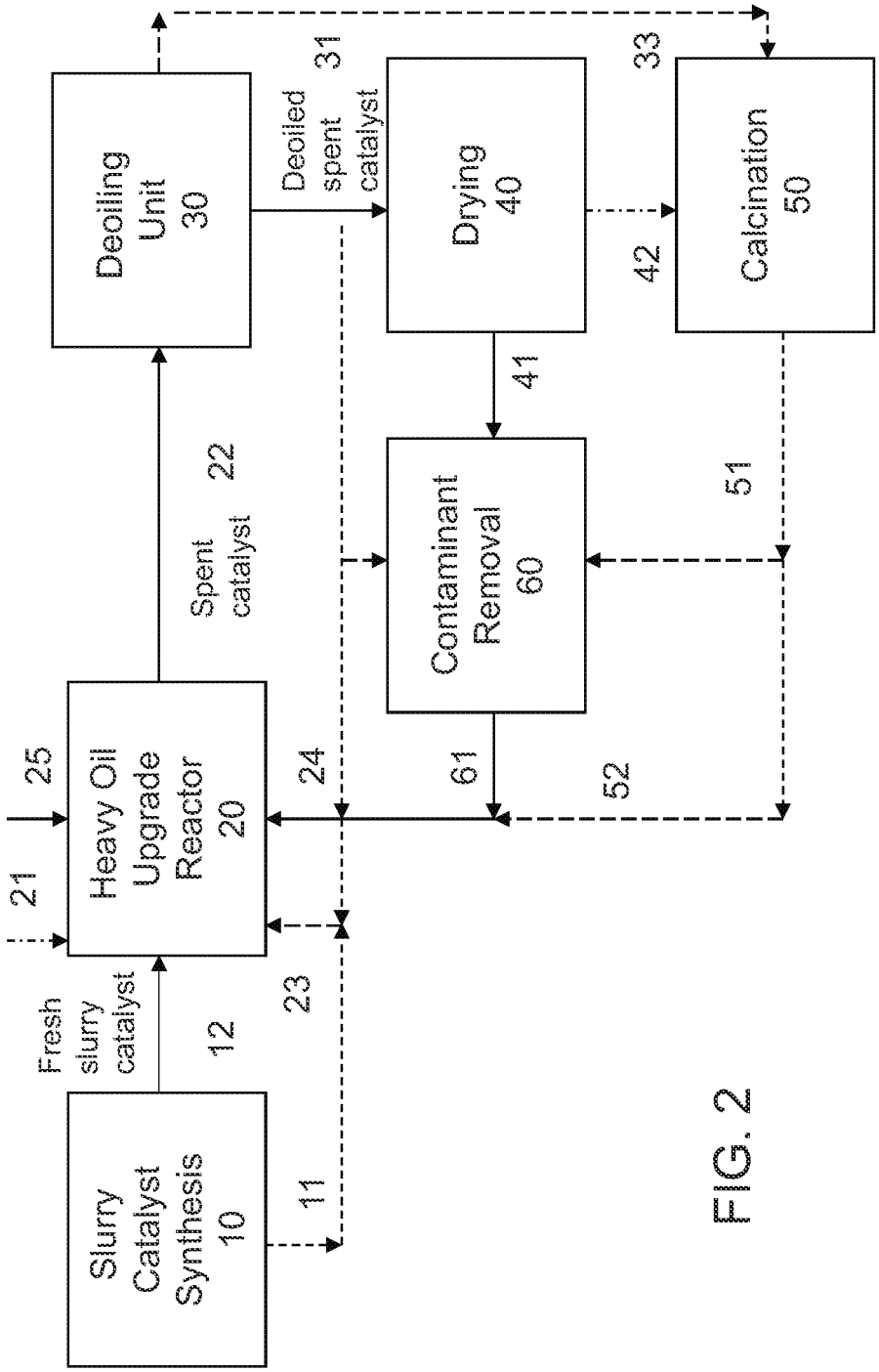
Deoiling Unit 30
Deoiled spent catalyst
31
Drying 40
33
Calcination 50
42
41
Contaminant Removal 60
51
Spent catalyst
22
25
24
61
52
Heavy Oil Upgrade Reactor 20
21
Fresh slurry catalyst
12
23
Slurry Catalyst Synthesis 10
11

FIG. 2