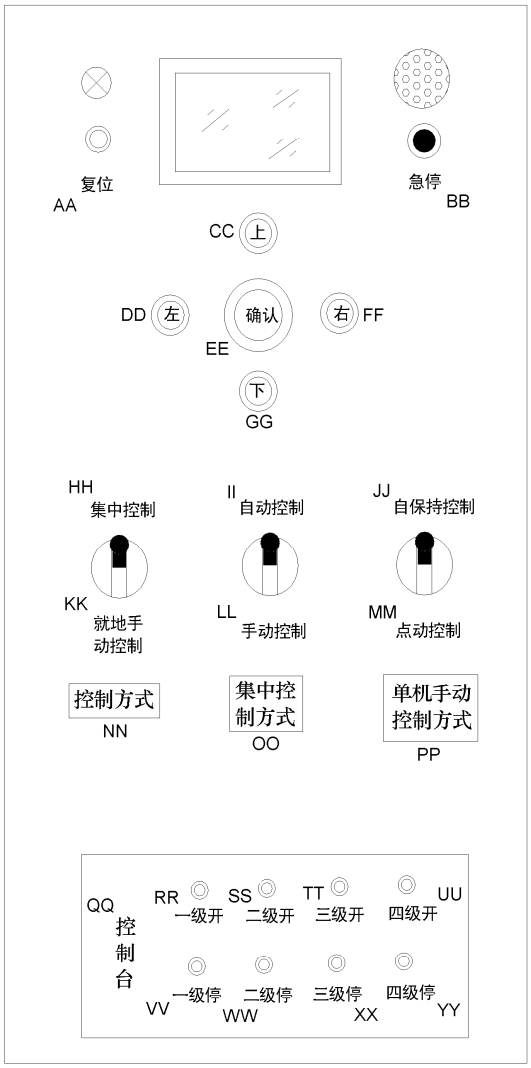

AA Reset
BB Emergency stop
CC Up
DD Left
EE Confirm
FF Left
GG Down
HH Centralized control
II Automatic control
JJ Automatic keeping control
KK Onsite manual control
LL Manual control
MM Jogging control
NN Control mode
OO Centralized control mode
PP Single-machine manual control mode
QQ Console
RR First level starts
SS Second level starts
TT Third level starts
UU Fourth level starts
VV First level stops
WW Second level stops
XX Third level stops
YY Fourth level stops

FIG.1

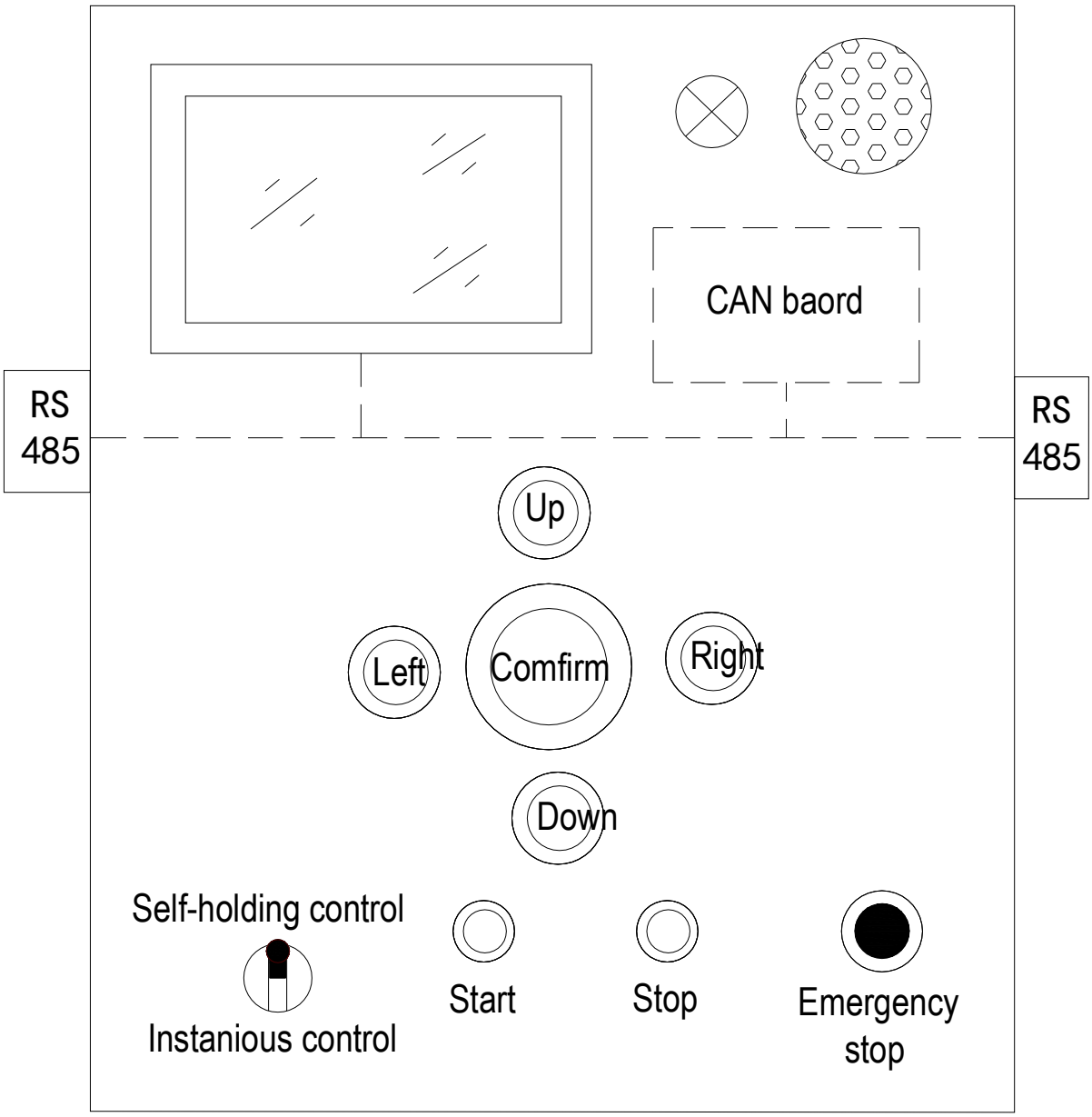
CAN baord
RS
485
RS
485
Up
Left
Comfirm
Right
Down
Self-holding control
Instanious control
Start
Stop
Emergency
stop

FIG.2

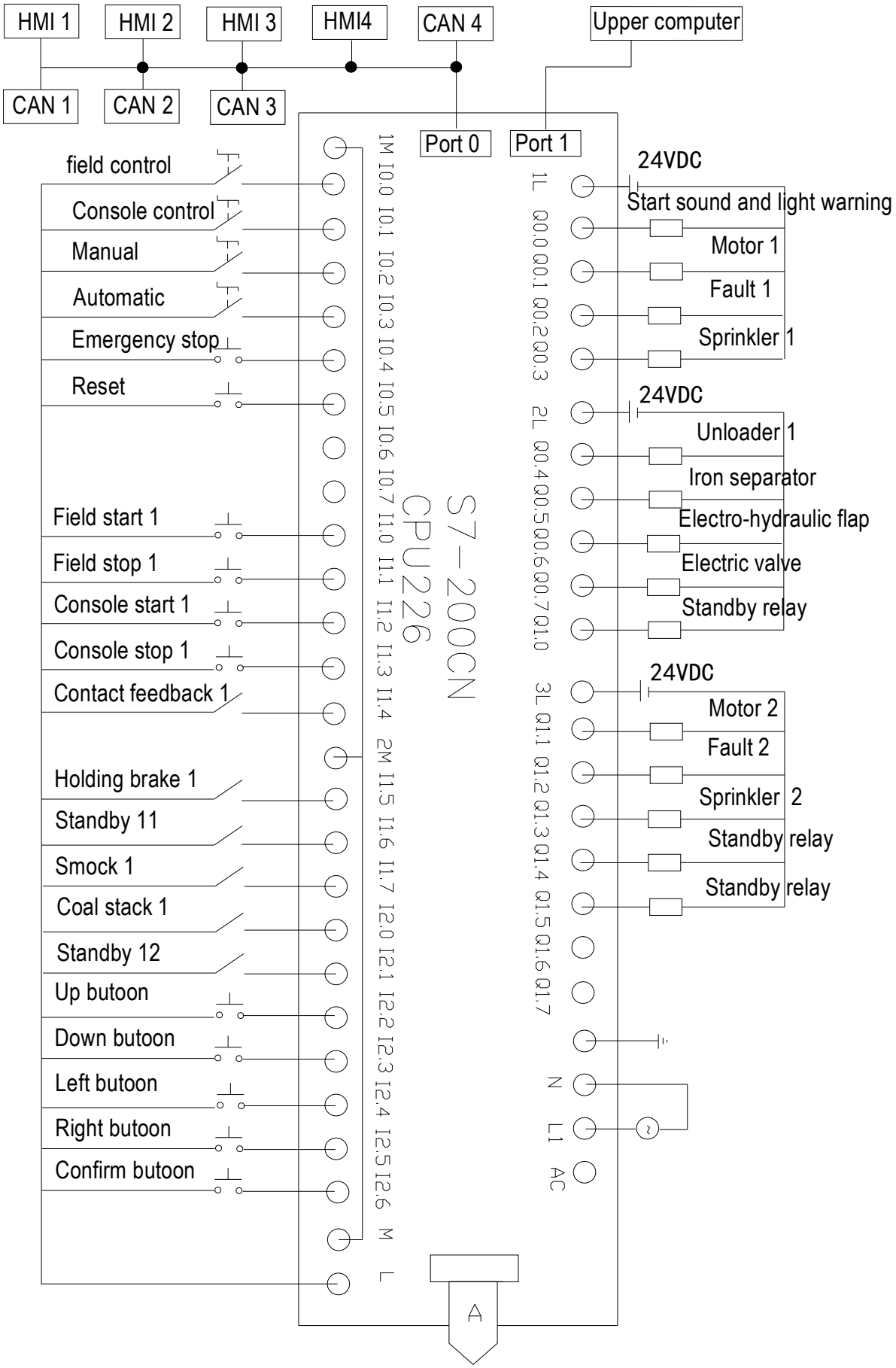
HMI 1
HMI 2
HMI 3
HMI4
CAN 4
Upper computer
CAN 1
CAN 2
CAN 3
Port 0
Port 1
field control
Console control
Manual
Automatic
Emergency stop
Reset
Field start 1
Field stop 1
Console start 1
Console stop 1
Contact feedback 1
Holding brake 1
Standby 11
Smock 1
Coal stack 1
Standby 12
Up butoon
Down butoon
Left butoon
Right butoon
Confirm butoon
1M I0.0 I0.1 I0.2 I0.3 I0.4 I0.5 I0.6 I0.7 I1.0 I1.1 I1.2 I1.3 I1.4 2M I1.5 I1.6 I1.7 I2.0 I2.1 I2.2 I2.3 I2.4 I2.5 I2.6 M L
S7-200CN
CPU226
1L Q0.0 Q0.1 Q0.2 Q0.3 2L Q0.4 Q0.5 Q0.6 Q0.7 Q1.0 3L Q1.1 Q1.2 Q1.3 Q1.4 Q1.5 Q1.6 Q1.7
N L1 AC
24VDC
Start sound and light warning
Motor 1
Fault 1
Sprinkler 1
24VDC
Unloader 1
Iron separator
Electro-hydraulic flap
Electric valve
Standby relay
24VDC
Motor 2
Fault 2
Sprinkler 2
Standby relay
Standby relay
A

FIG.3

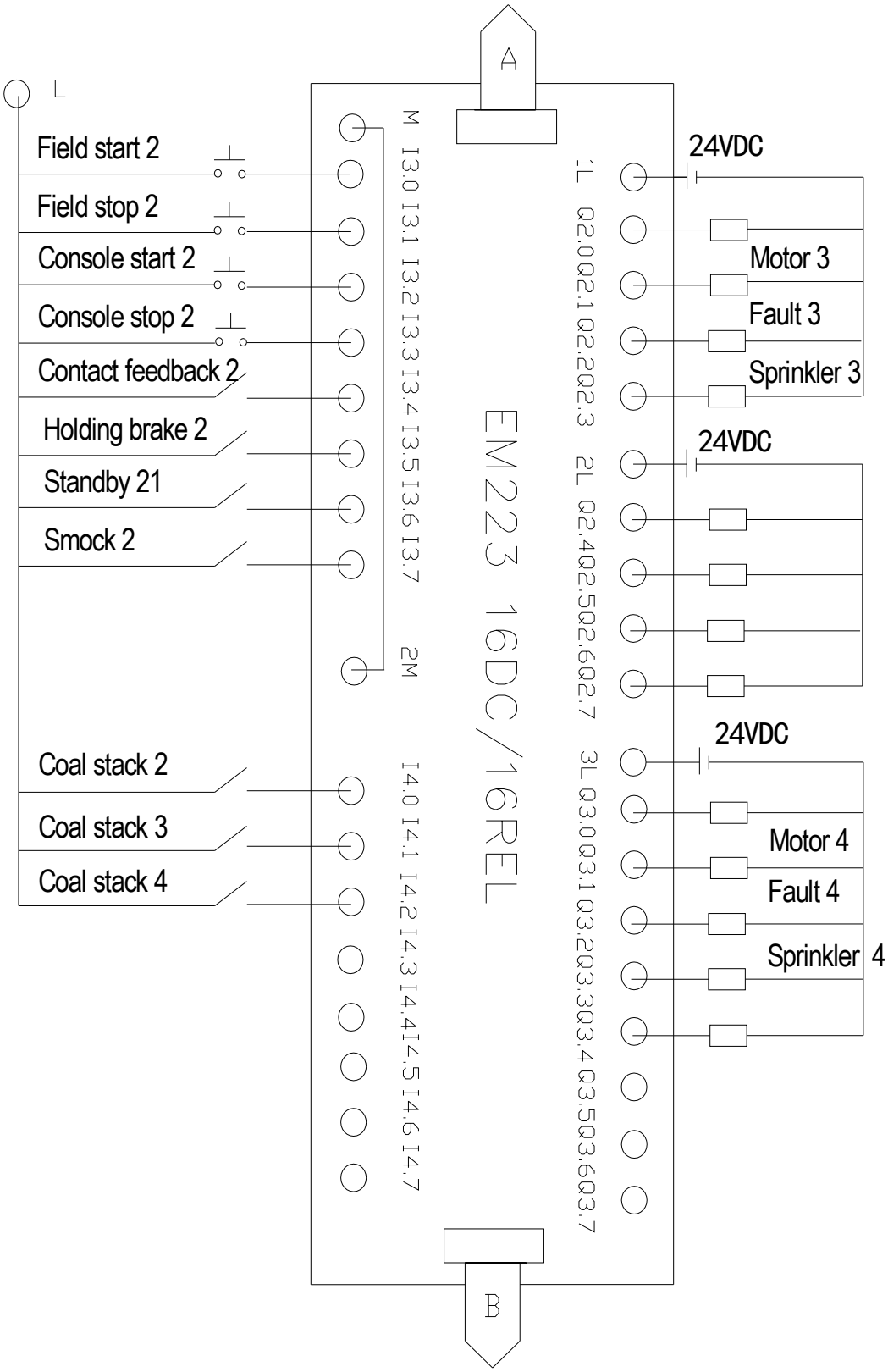
L
Field start 2
Field stop 2
Console start 2
Console stop 2
Contact feedback 2
Holding brake 2
Standby 21
Smock 2
Coal stack 2
Coal stack 3
Coal stack 4
M I3.0 I3.1 I3.2 I3.3 I3.4 I3.5 I3.6 I3.7
2M
I4.0 I4.1 I4.2 I4.3 I4.4 I4.5 I4.6 I4.7
A
B
EM223 16DC/16REL
1L Q2.0 Q2.1 Q2.2 Q2.3
2L Q2.4 Q2.5 Q2.6 Q2.7
3L Q3.0 Q3.1 Q3.2 Q3.3 Q3.4 Q3.5 Q3.6 Q3.7
24VDC
Motor 3
Fault 3
Sprinkler 3
24VDC
24VDC
Motor 4
Fault 4
Sprinkler 4

FIG.4

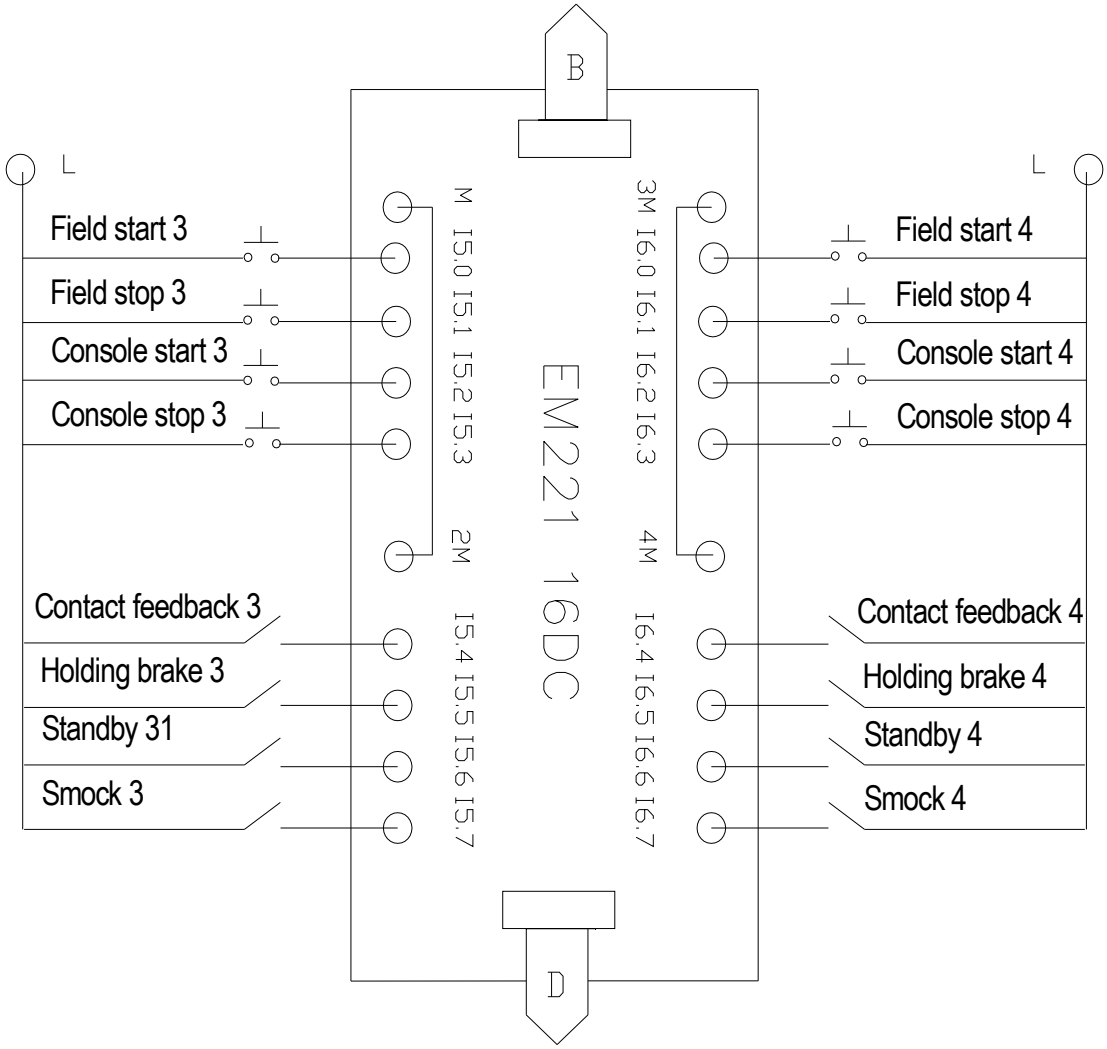
B
L
L
Field start 3
Field stop 3
Console start 3
Console stop 3
Contact feedback 3
Holding brake 3
Standby 31
Smock 3
M I5.0 I5.1 I5.2 I5.3
2M
I5.4 I5.5 I5.6 I5.7
EM221 16DC
3M I6.0 I6.1 I6.2 I6.3
4M
I6.4 I6.5 I6.6 I6.7
Field start 4
Field stop 4
Console start 4
Console stop 4
Contact feedback 4
Holding brake 4
Standby 4
Smock 4
D

FIG.5

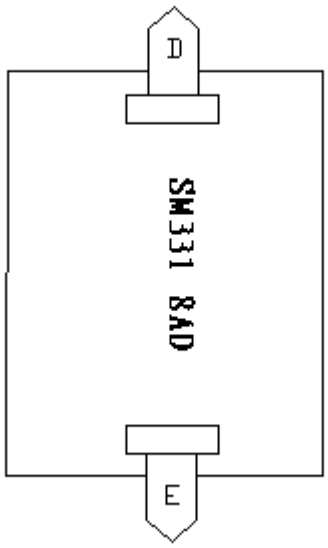
D
SM331 8AD
E

FIG.6

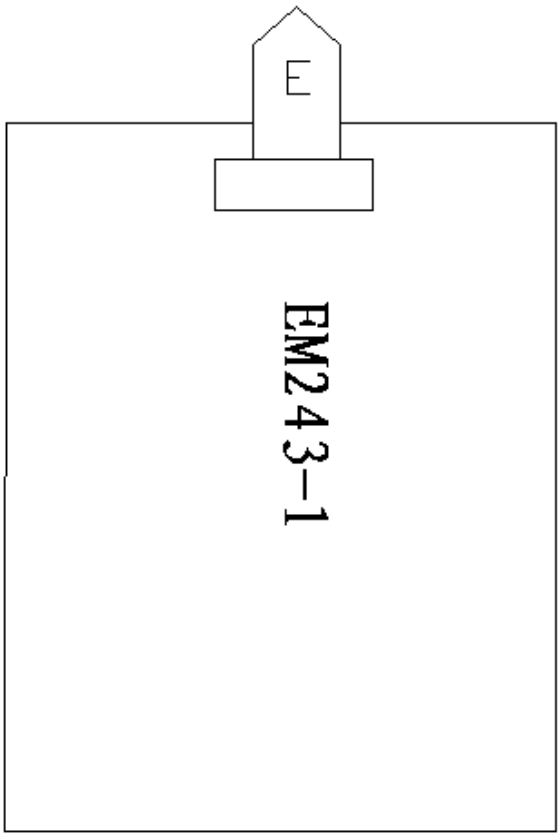
E
EM243-1

FIG.7

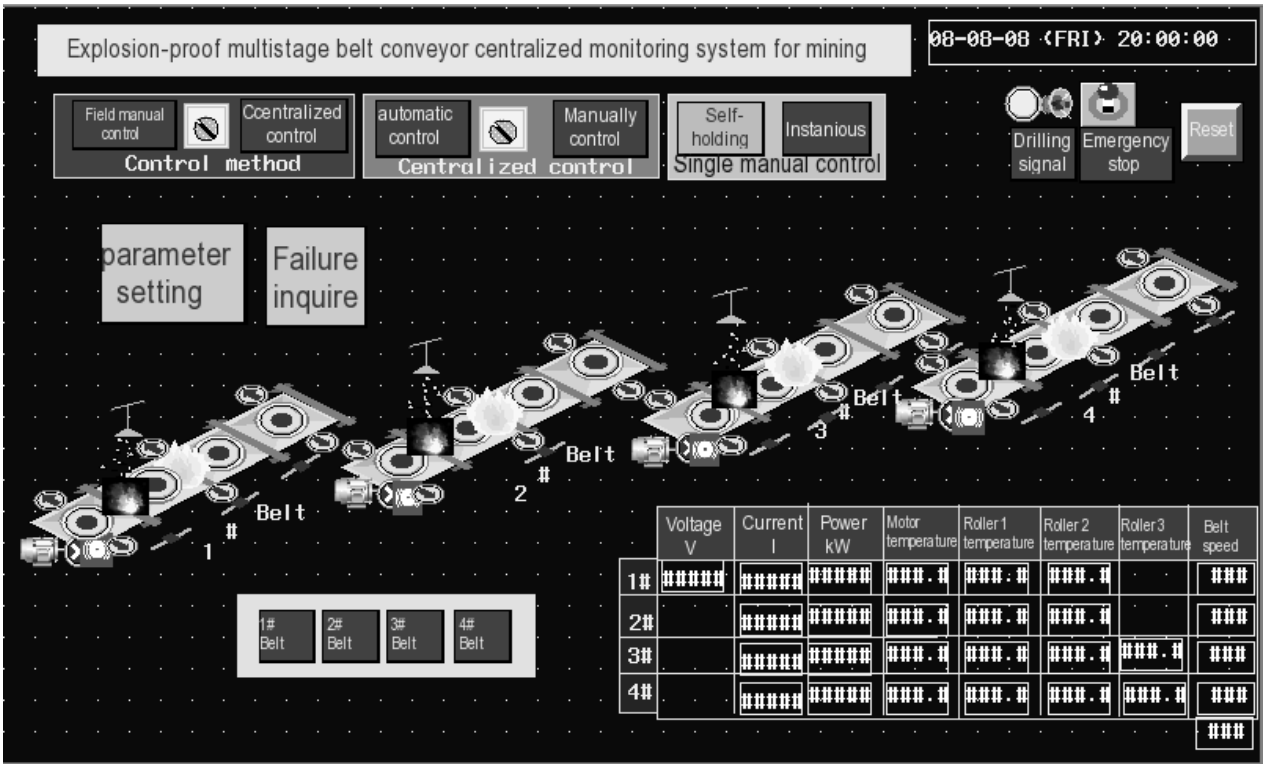
Explosion-proof multistage belt conveyor centralized monitoring system for mining
08-08-08 (FRI) 20:00:00
Field manual control
Ccentralized control
Control method
automatic control
Manually control
Centralized control
Self-holding
Instanious
Single manual control
Drilling signal
Emergency stop
Reset
parameter setting
Failure inquire
Belt
1#
Belt
2#
Belt
3#
Belt
4#
1# Belt
2# Belt
3# Belt
4# Belt
Voltage V
Current I
Power kW
Motor temperature
Roller 1 temperature
Roller 2 temperature
Roller 3 temperature
Belt speed
1#
2#
3#
4#

FIG.8

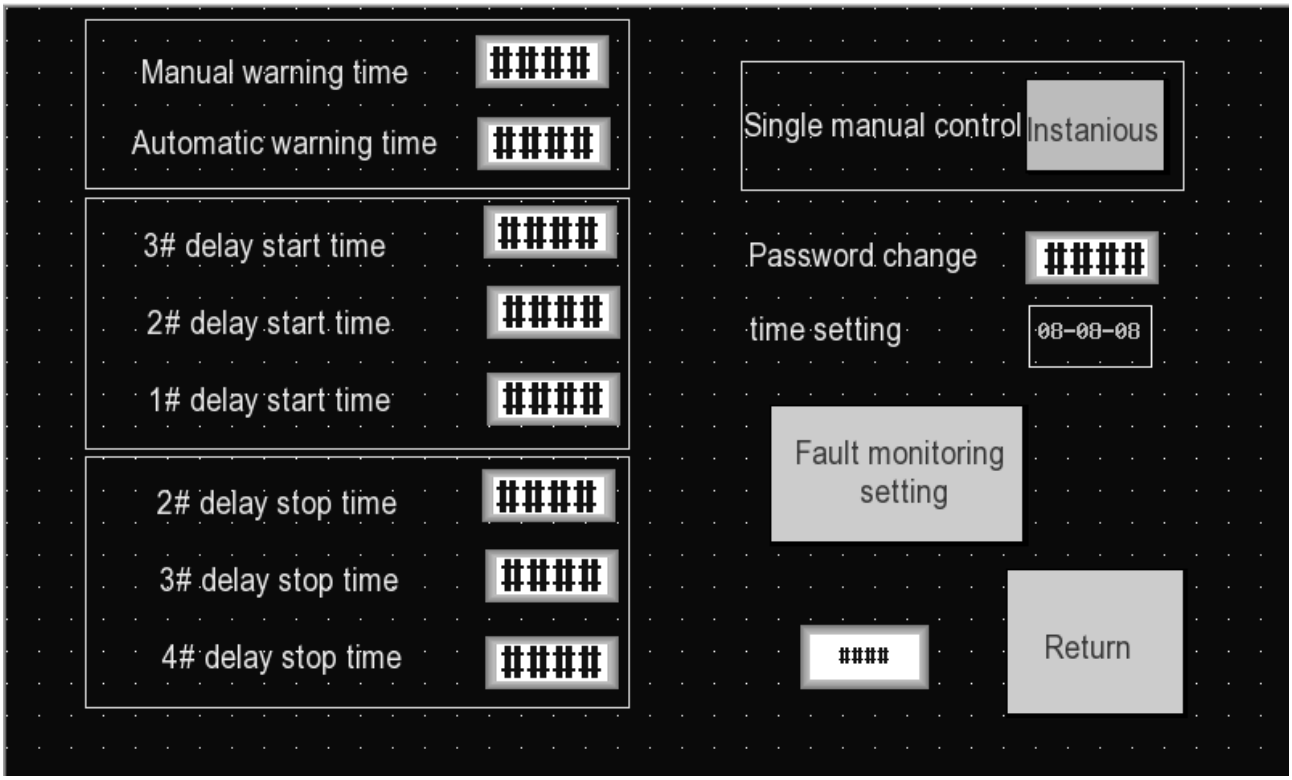
Manual warning time
Automatic warning time
3# delay start time
2# delay start time
1# delay start time
2# delay stop time
3# delay stop time
4# delay stop time
Single manual control
Instanious
Password change
time setting
08-08-08
Fault monitoring setting
Return

FIG.9

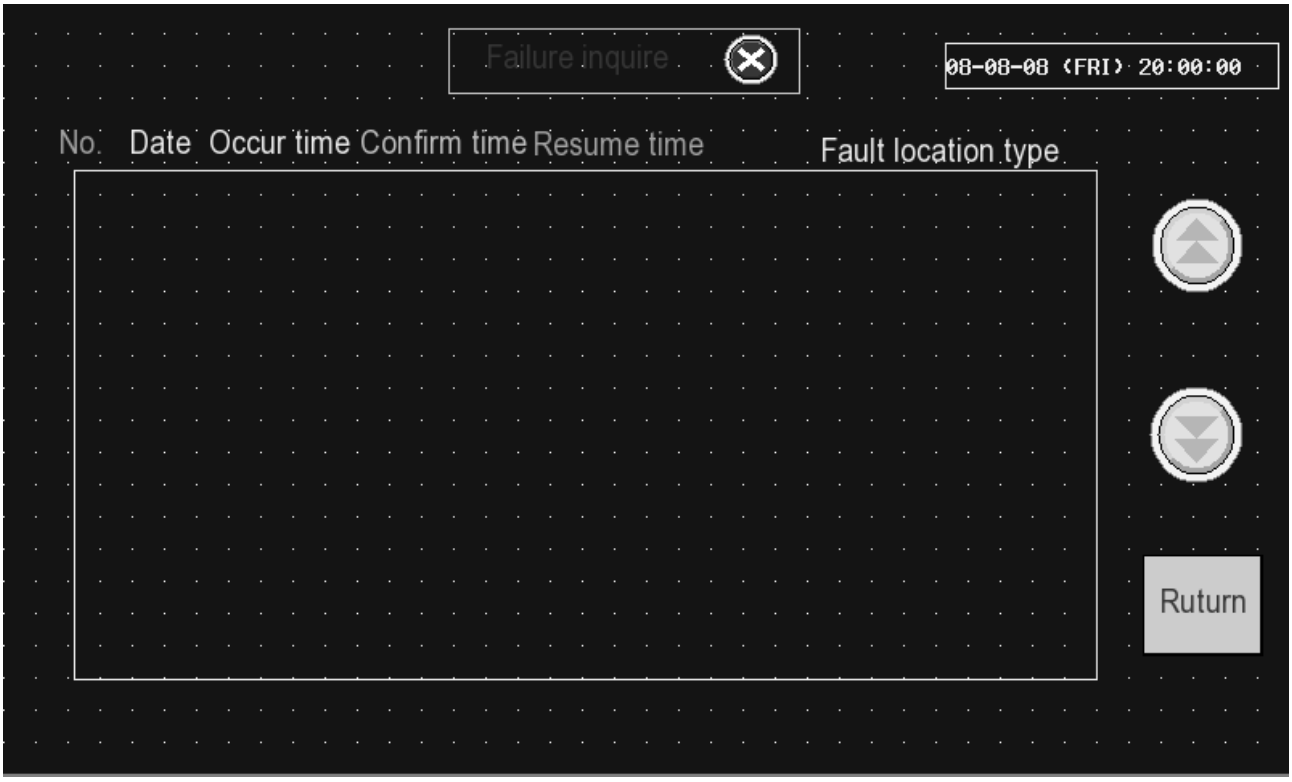
Failure inquire
08-08-08 (FRI) 20:00:00
No.
Date
Occur time
Confirm time
Resume time
Fault location type
Ruturn

FIG.10

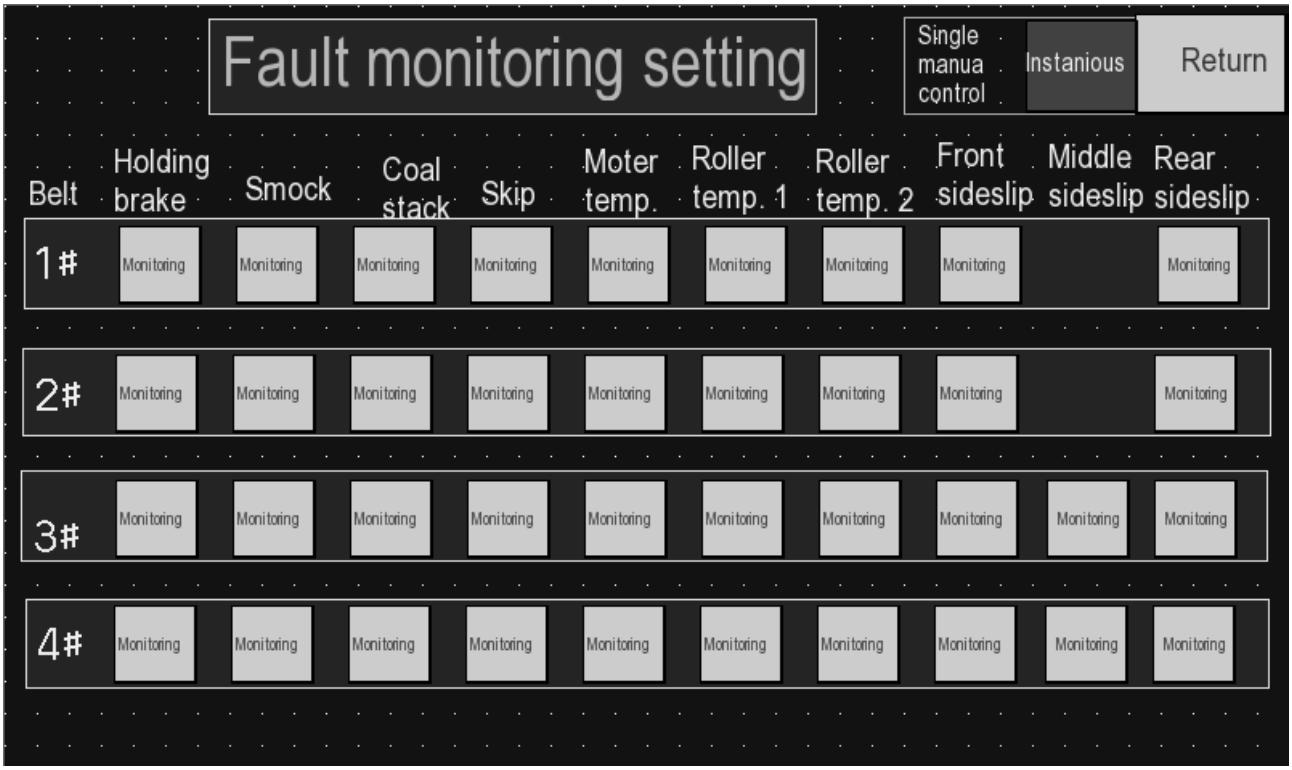
Fault monitoring setting
Single manua control
Instanious
Return
Belt
Holding brake
Smock
Coal stack
Skip
Moter temp.
Roller temp. 1
Roller temp. 2
Front sideslip
Middle sideslip
Rear sideslip
1#
2#
3#
4#
Monitoring

FIG.11