(12) INTERNATIONAL APPLICATION PUBLISHED UNDER THE PATENT COOPERATION TREATY (PCT)

(19) World Intellectual Property Organization
International Bureau

(43) International Publication Date
30 January 2003 (30.01.2003)

PCT

(10) International Publication Number
WO 03/008810 A1

(51) International Patent Classification[7]: F15B 15/22, F16K 31/56, 31/00

(21) International Application Number: PCT/US02/15904

(22) International Filing Date: 20 May 2002 (20.05.2002)

(25) Filing Language: English

(26) Publication Language: English

(30) Priority Data:
09/907,195 17 July 2001 (17.07.2001) US

(71) Applicant: ANSUL INCORPORATED [US/US]; One Stanton Street, Marinette, WI 54143 (US).

(72) Inventor: GRESSEL, James, R.; 4213 9th Street, Menominee, MI 49858 (US).

(74) Agent: HELMREICH, Loren, G.; Browning Bushman, Suite 1800, 5718 Westheimer Road, Houston, TX 77057 (US).

(81) Designated States *(national)*: AE, AG, AL, AM, AT, AU, AZ, BA, BB, BG, BR, BY, BZ, CA, CH, CN, CO, CR, CU, CZ, DE, DK, DM, DZ, EC, EE, ES, FI, GB, GD, GE, GH, GM, HR, HU, ID, IL, IN, IS, JP, KE, KG, KP, KR, KZ, LC, LK, LR, LS, LT, LU, LV, MA, MD, MG, MK, MN, MW, MX, MZ, NO, NZ, OM, PH, PL, PT, RO, RU, SD, SE, SG, SI, SK, SL, TJ, TM, TN, TR, TT, TZ, UA, UG, UZ, VN, YU, ZA, ZM, ZW.

(84) Designated States *(regional)*: ARIPO patent (GH, GM, KE, LS, MW, MZ, SD, SL, SZ, TZ, UG, ZM, ZW), Eurasian patent (AM, AZ, BY, KG, KZ, MD, RU, TJ, TM), European patent (AT, BE, CH, CY, DE, DK, ES, FI, FR, GB, GR, IE, IT, LU, MC, NL, PT, SE, TR), OAPI patent (BF, BJ, CF, CG, CI, CM, GA, GN, GQ, GW, ML, MR, NE, SN, TD, TG).

[Continued on next page]

(54) Title: BOOSTER ACTUATOR

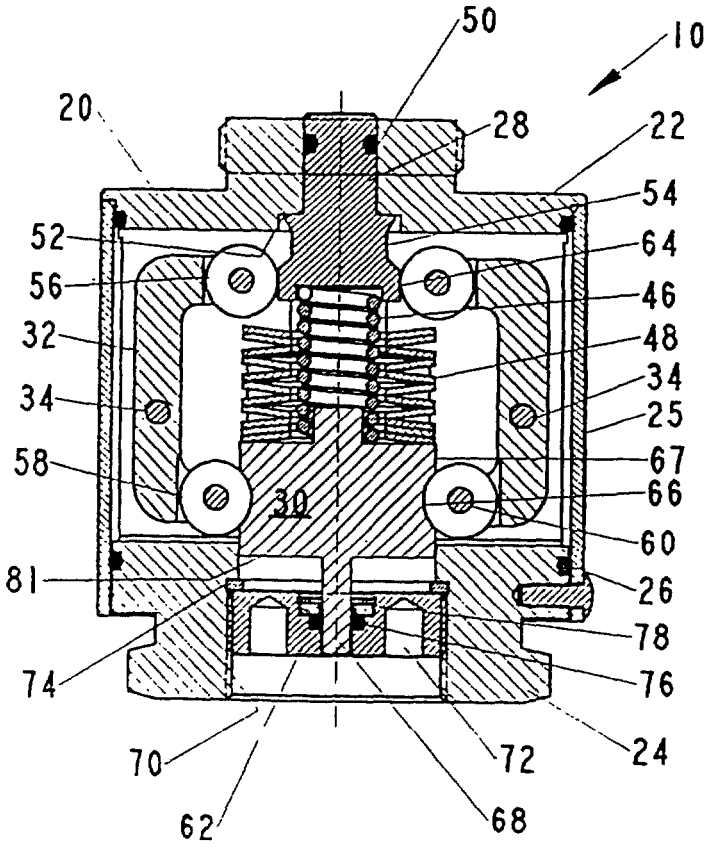

(57) Abstract: A booster actuator (10) may be positioned between the solenoid (12) and a valve (14), and increases the energy output from the solenoid to activate the valve. The booster actuator (10) may include a force input member (28) and a force output member (30) each linearly movable with respect to a body (20) from an initial position to an activated position. A coil spring (46) biases the input member to the initial input position, while a plurality of disk springs (48) bias the output member (30) to the activated output position. A plurality of linking members (32) each pivotable with respect to the body normally retain the force output member in the initial position, but upon movement of the input member to the activated position release the force output member in response to the disk springs.

WO 03/008810 A1

Published:
— *with international search report*
— *before the expiration of the time limit for amending the claims and to be republished in the event of receipt of amendments*

For two-letter codes and other abbreviations, refer to the "Guidance Notes on Codes and Abbreviations" appearing at the beginning of each regular issue of the PCT Gazette.