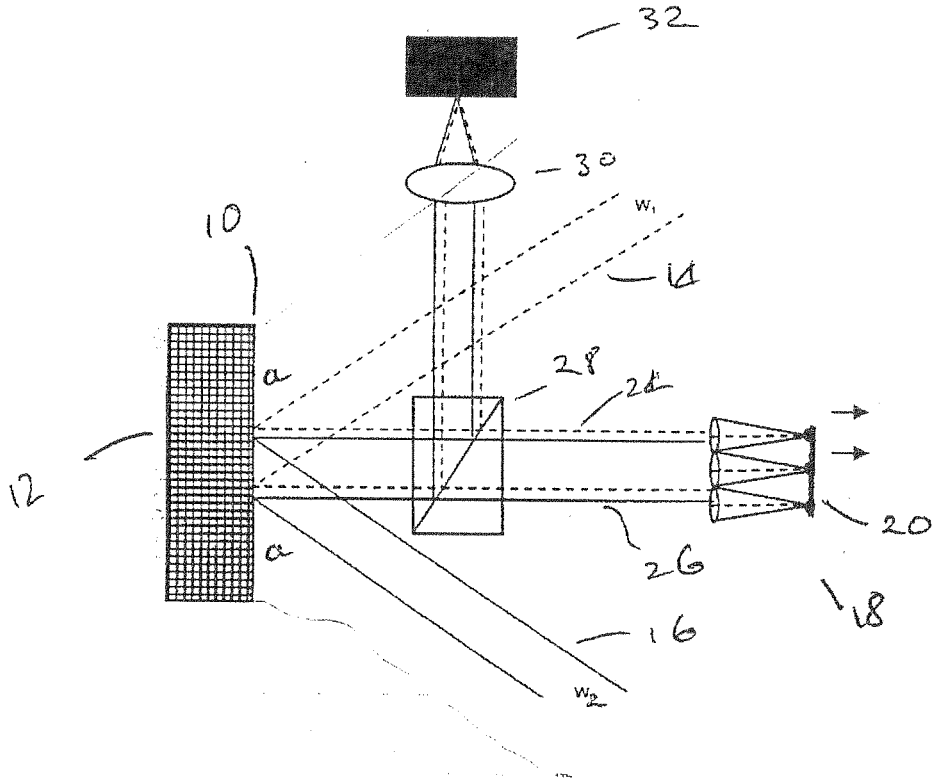

Figure 1

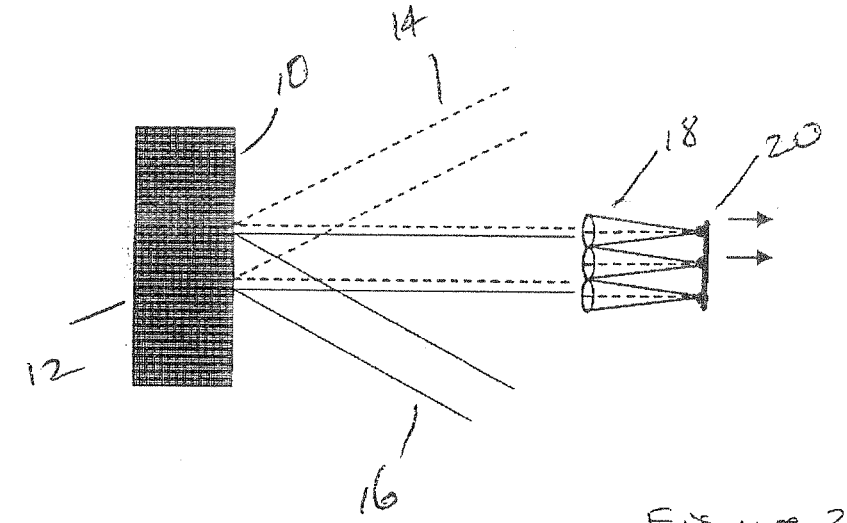

Figure 2(a)

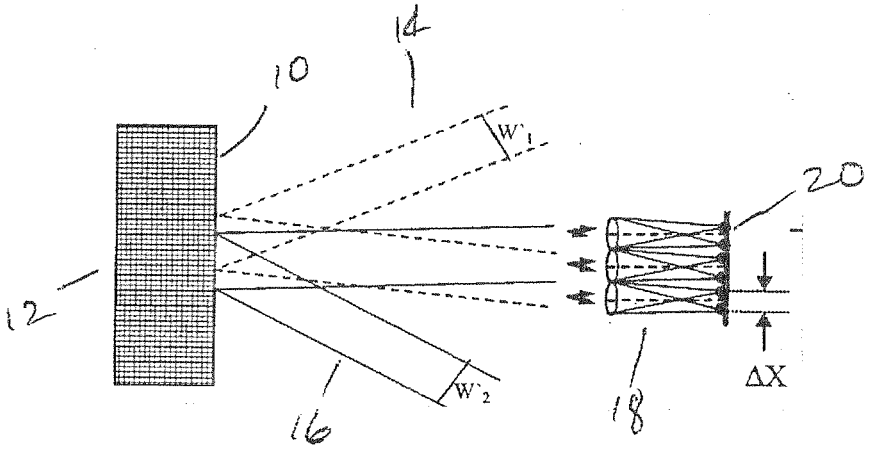

Figure 2(b)

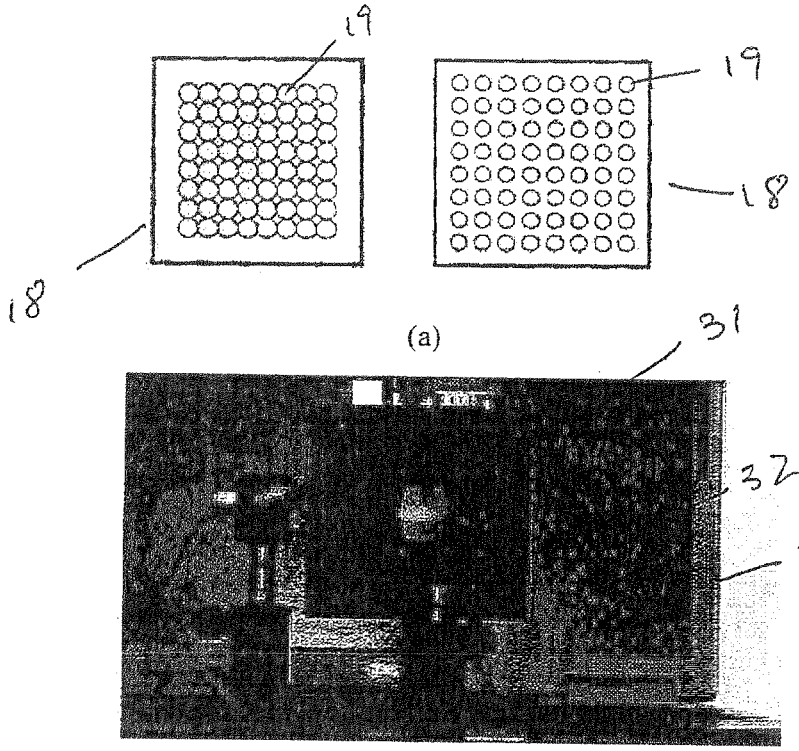

Figure 3

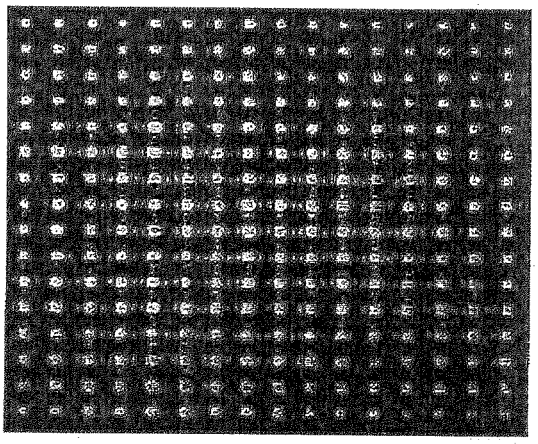

(a)

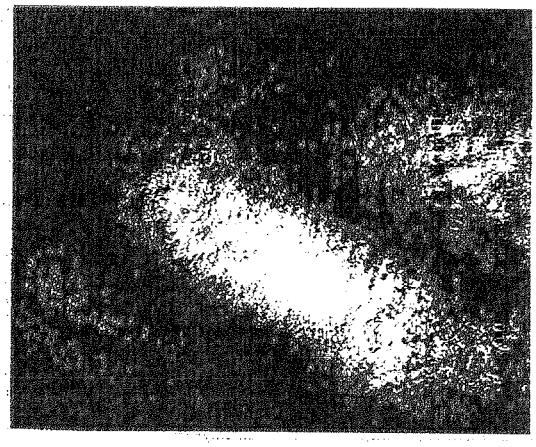

(b)

Figure 4

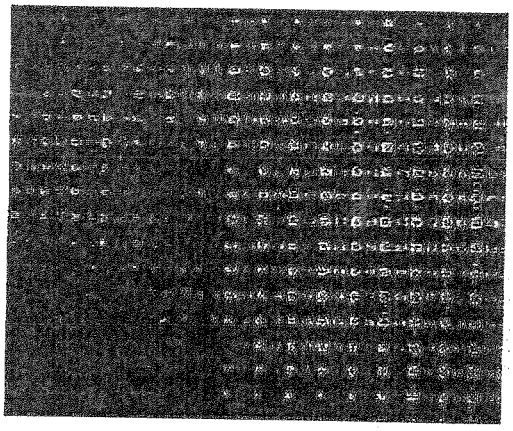

(a)

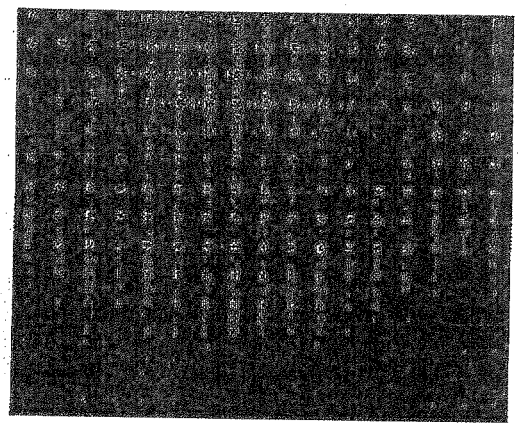

(b)

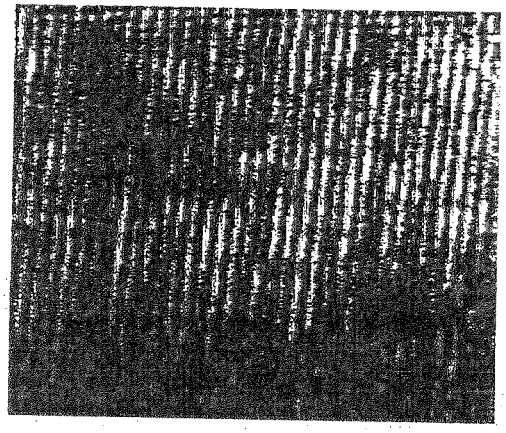

(c)

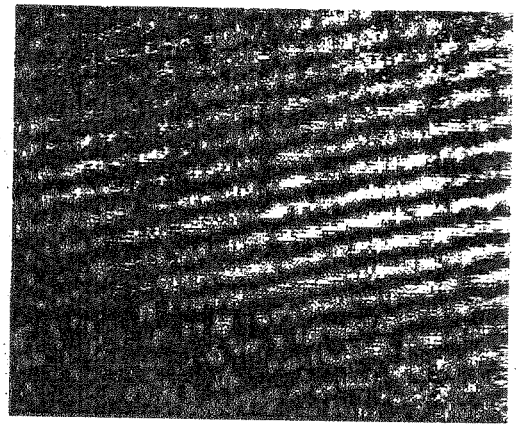

(d)

Figure 5

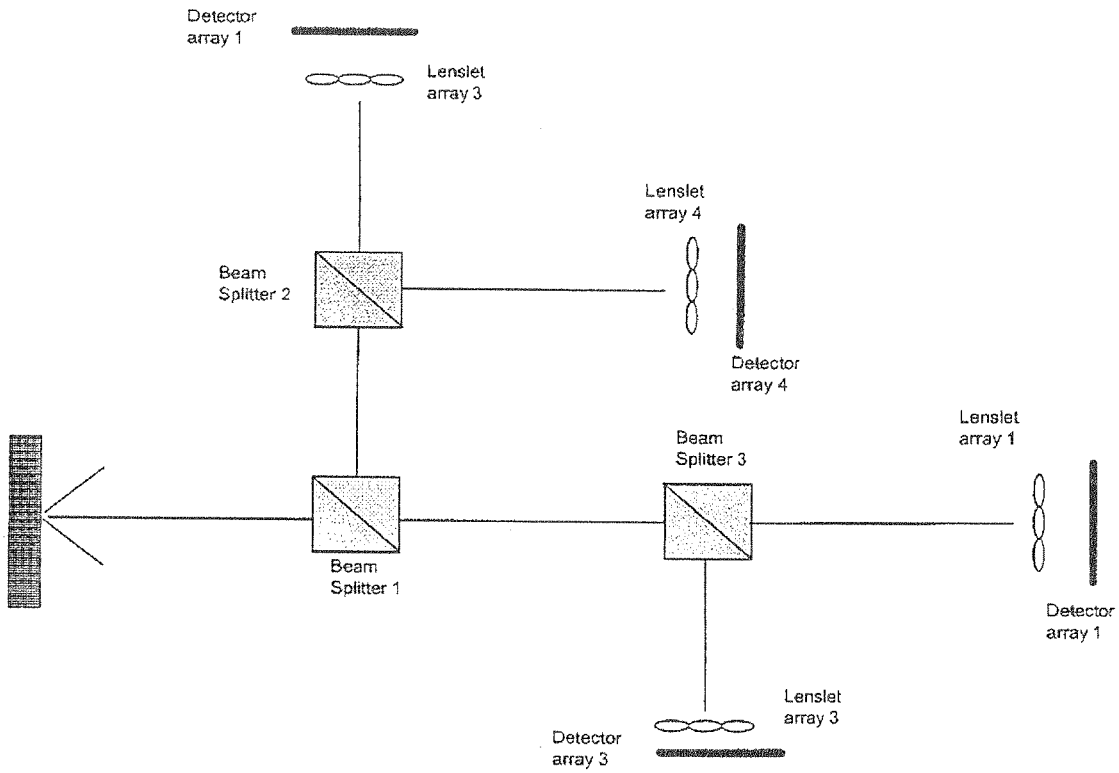
Detector
array 1
Lenslet
array 3
Lenslet
array 4
Beam
Splitter 2
Detector
array 4
Lenslet
array 1
Beam
Splitter 3
Beam
Splitter 1
Detector
array 1
Lenslet
array 3
Detector
array 3

Figure 6.

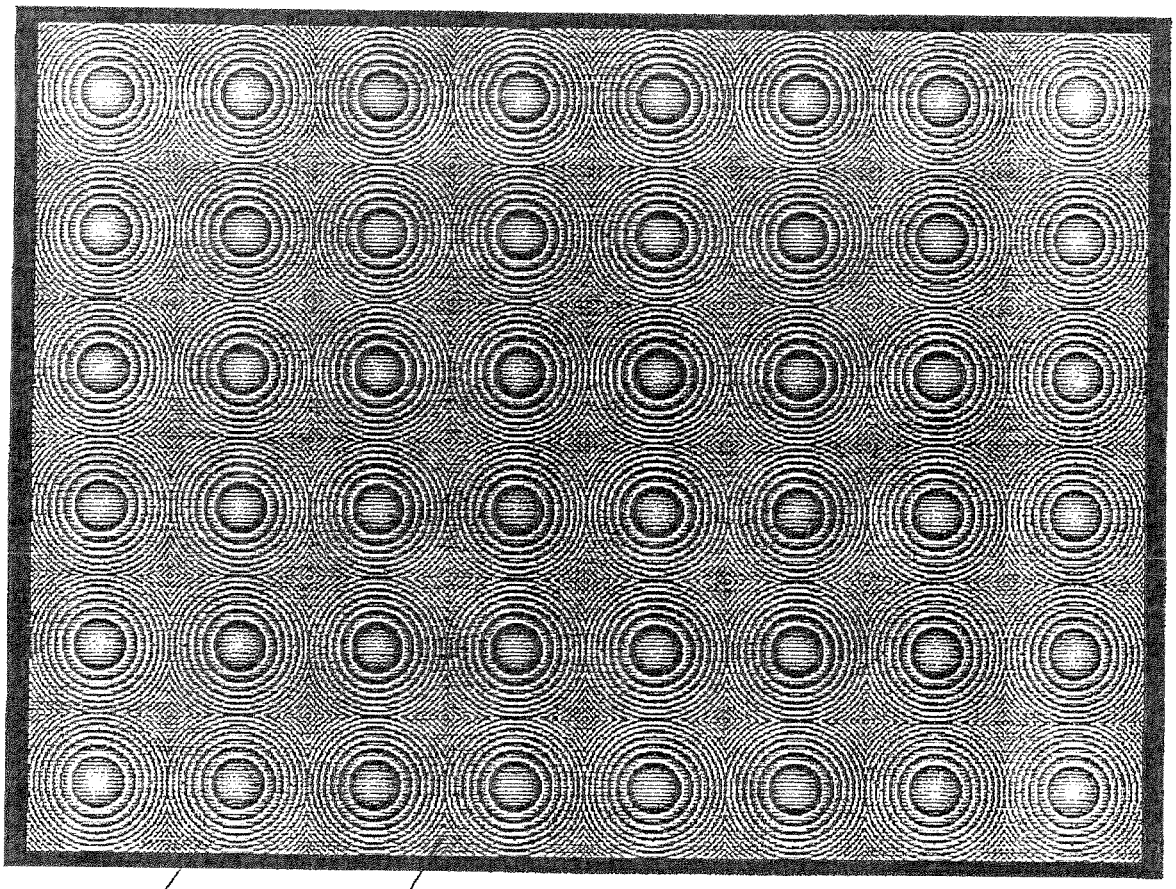

Figure 7

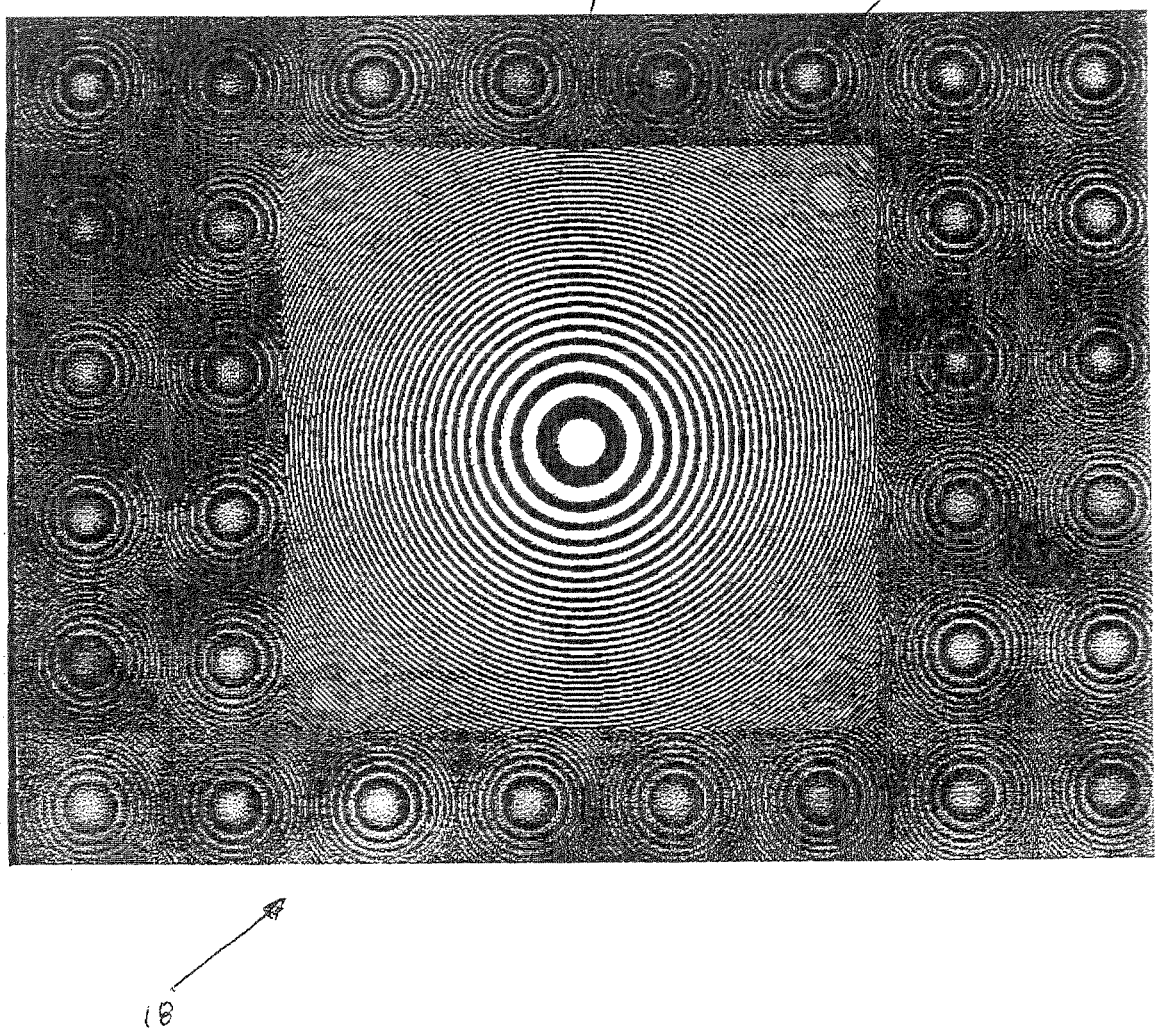

Figure 8

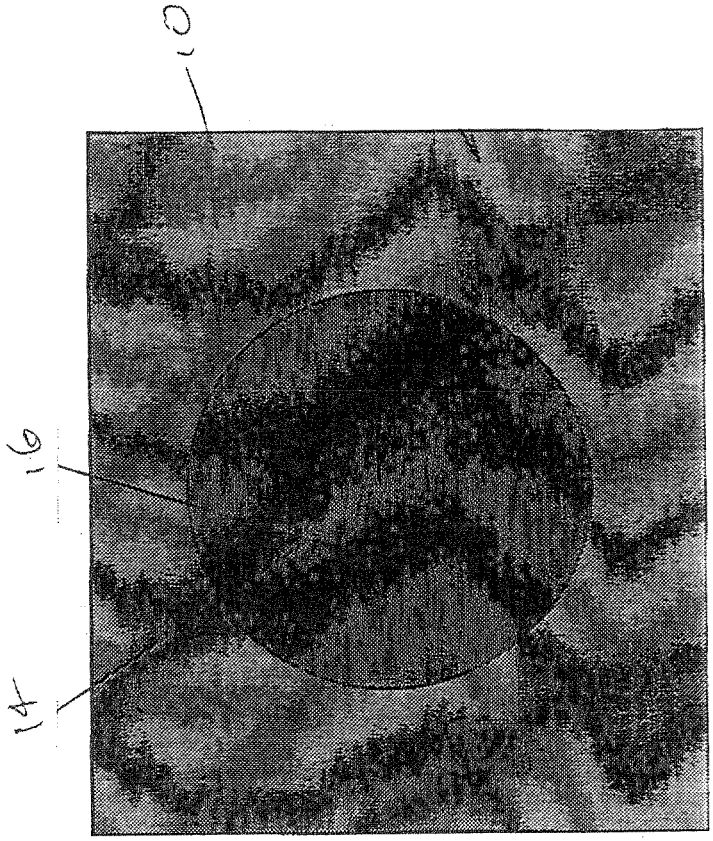

Figure 9