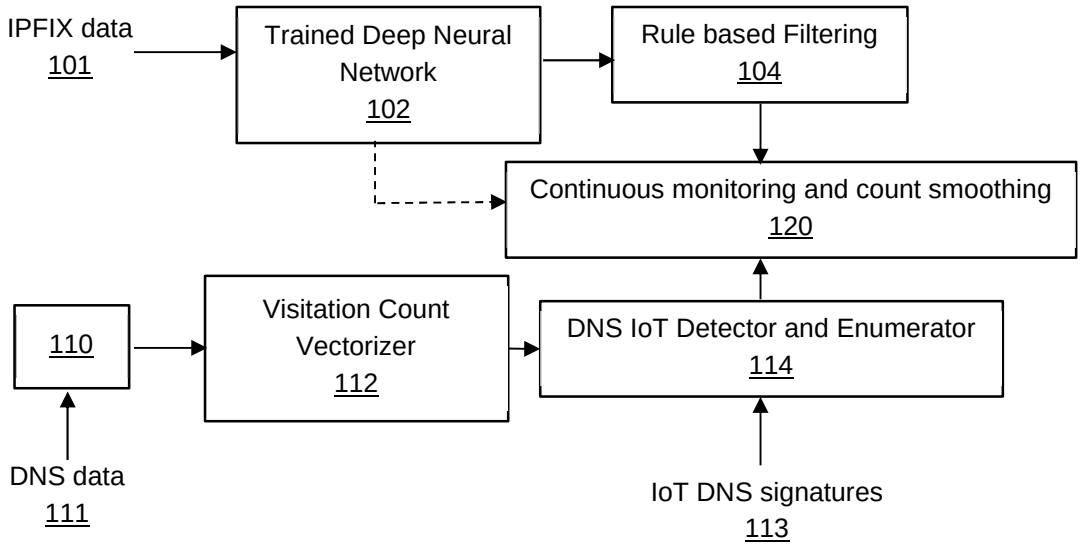

FIGURE 1

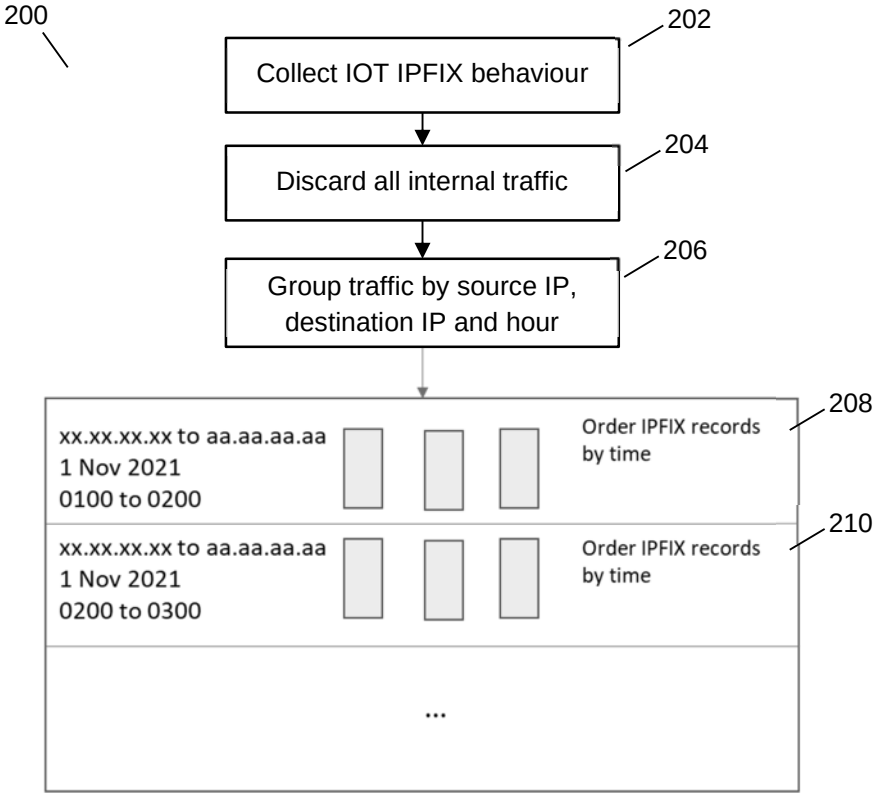

FIGURE 2

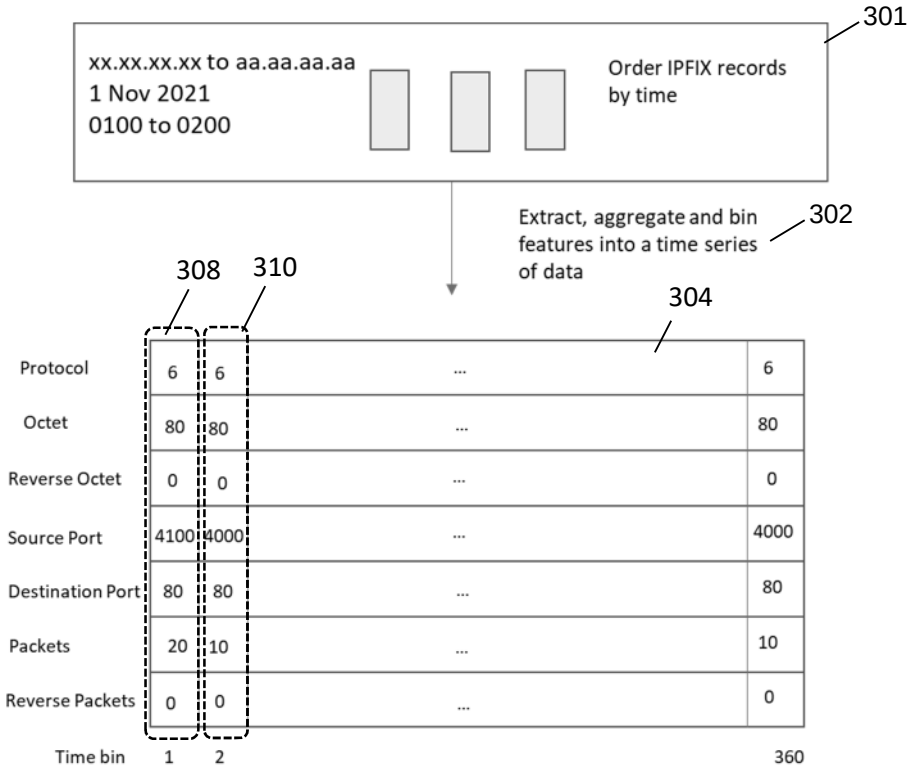

FIGURE 3

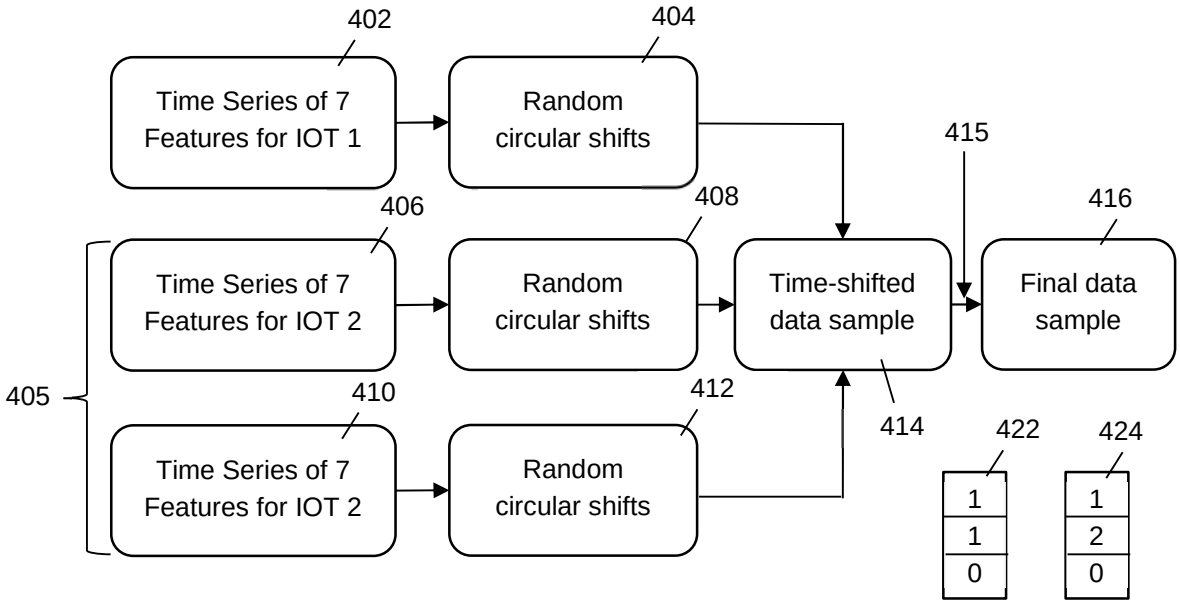

FIGURE 4

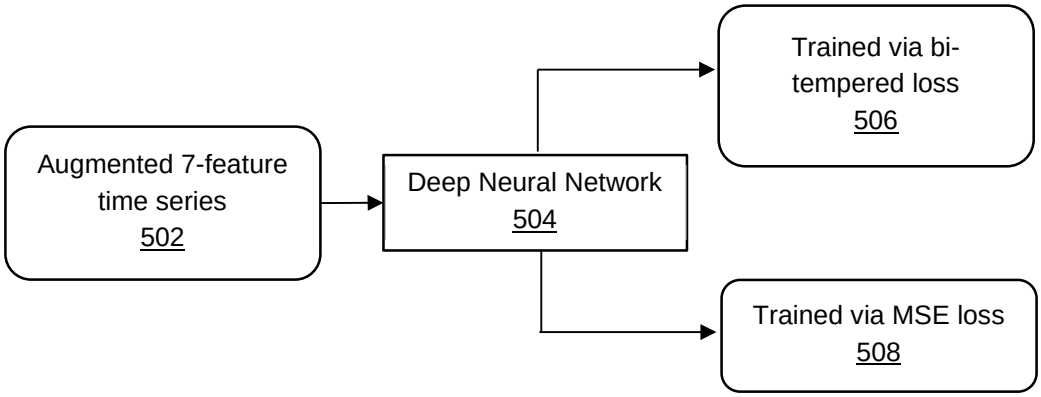

FIGURE 5

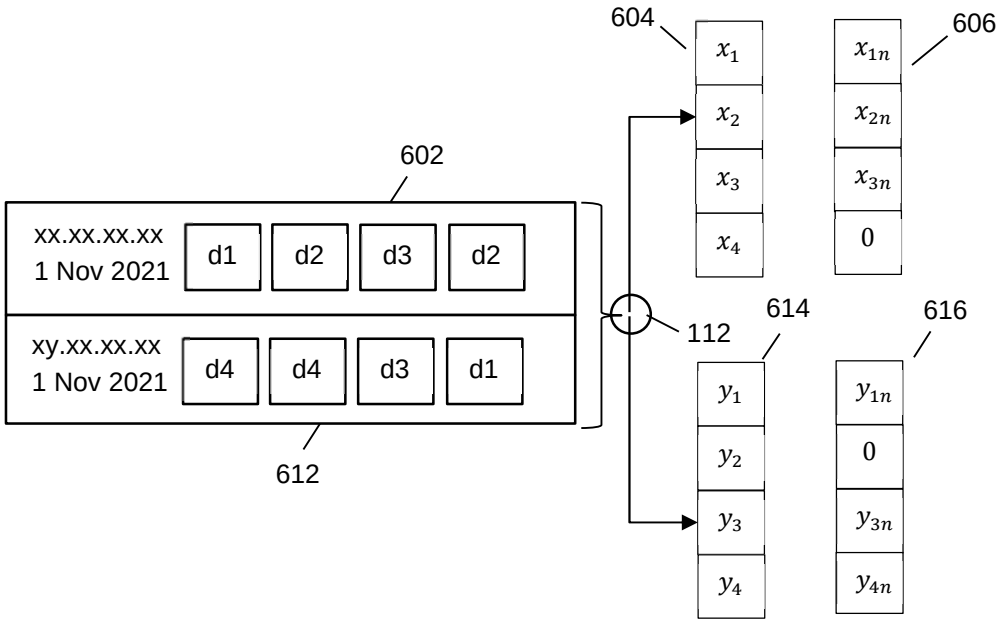

FIGURE 6

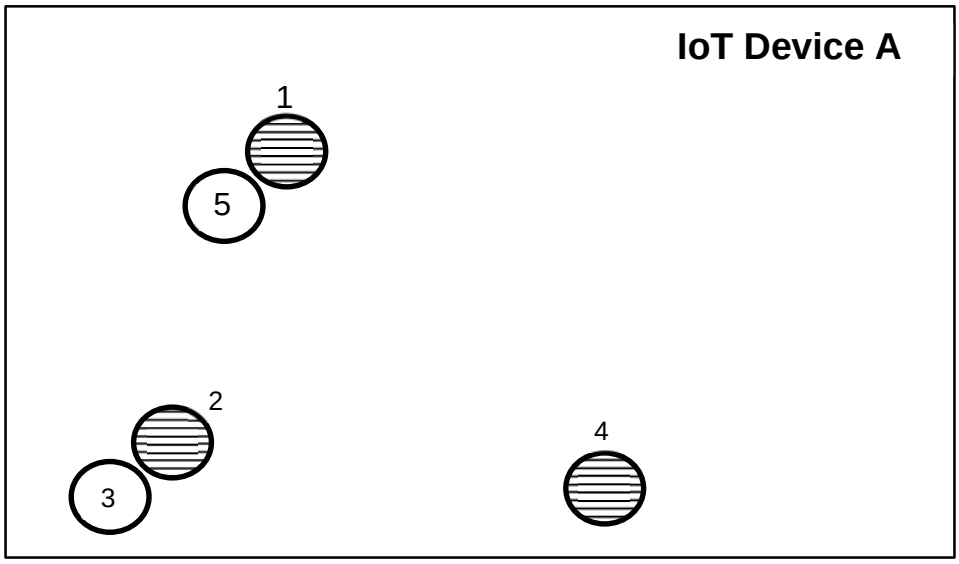

FIGURE 7

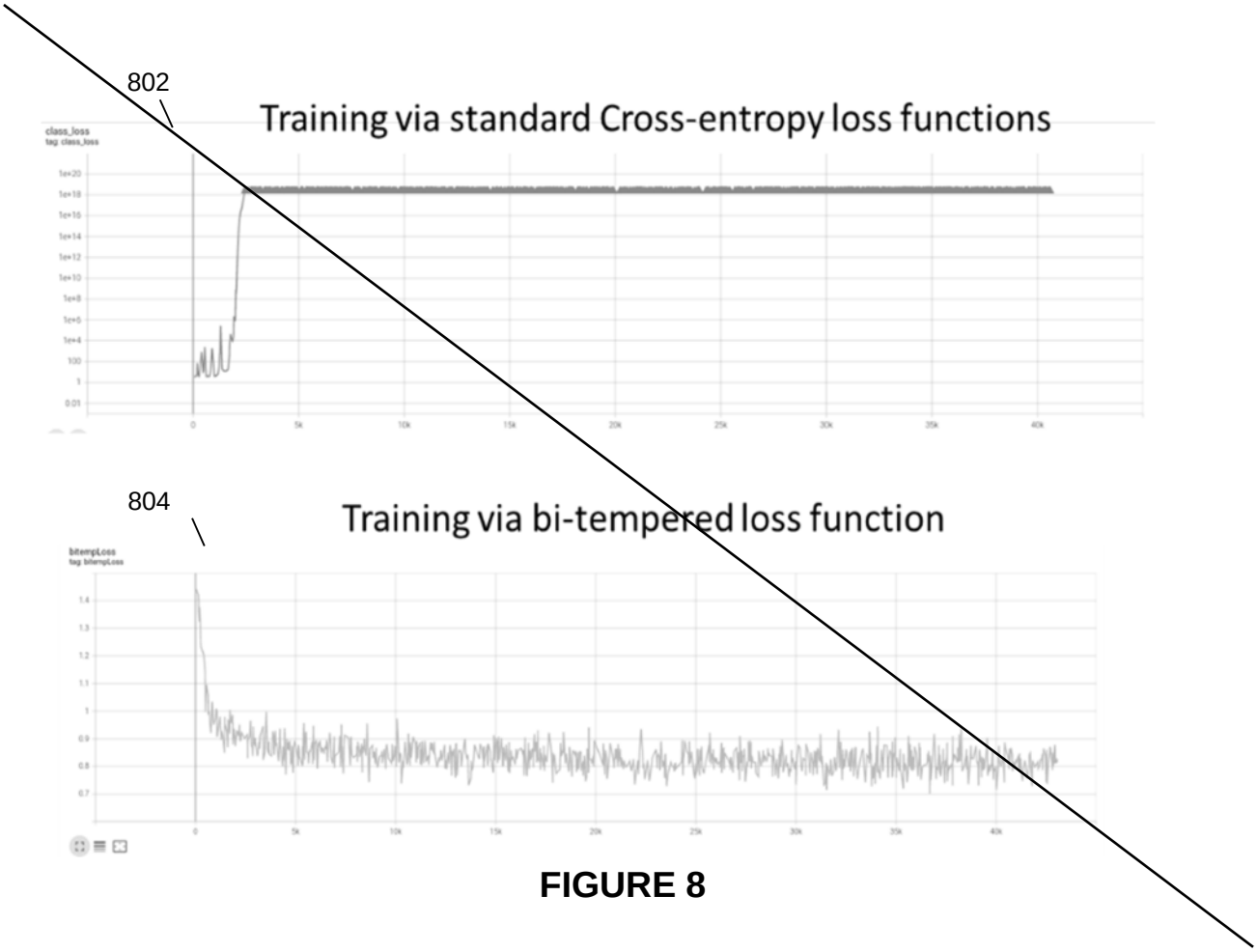

FIGURE 8

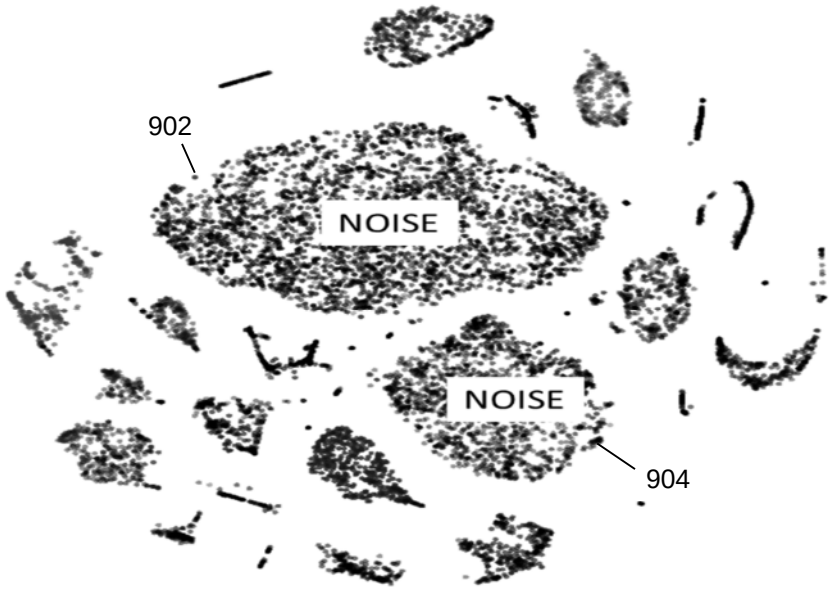

FIGURE 9

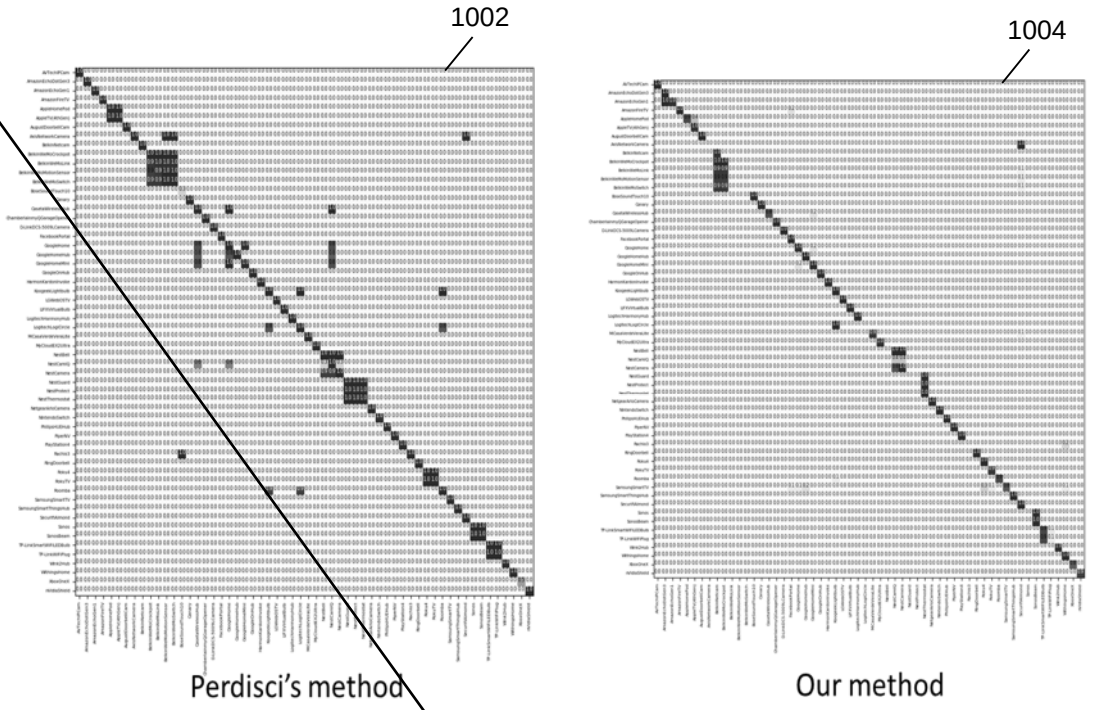

FIGURE 10

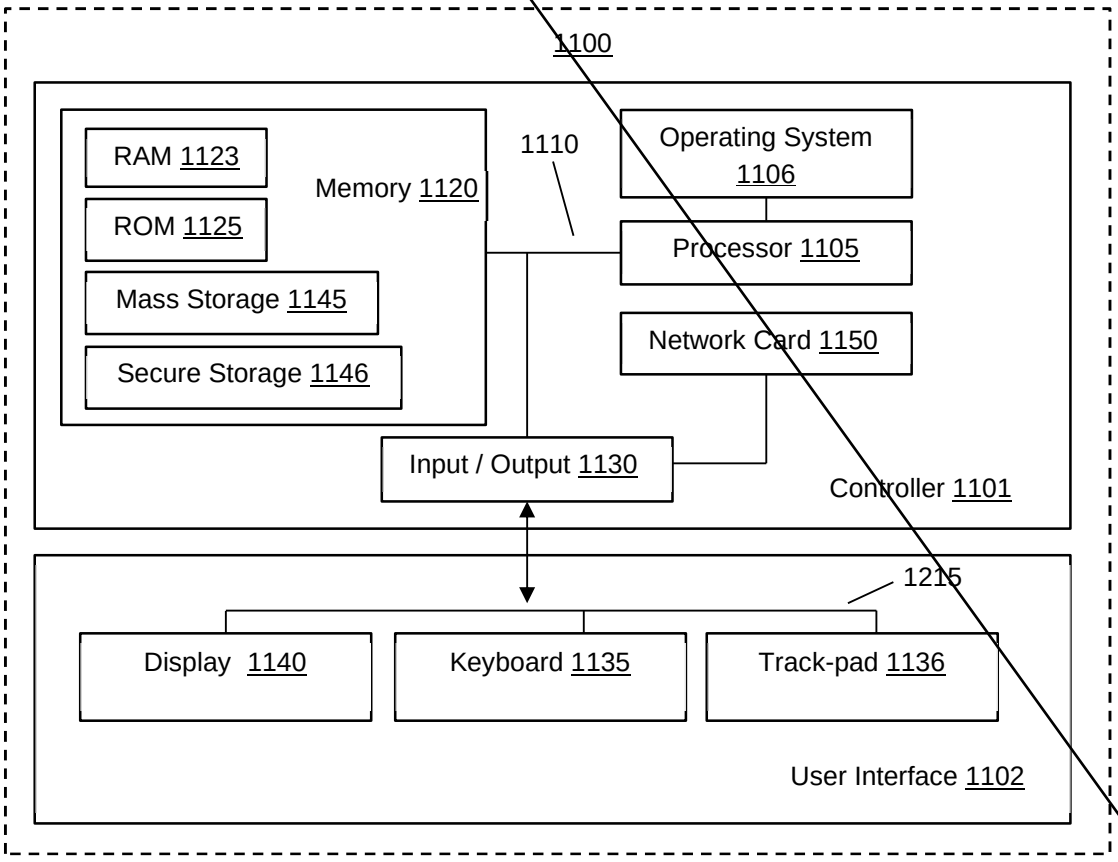

FIGURE 11

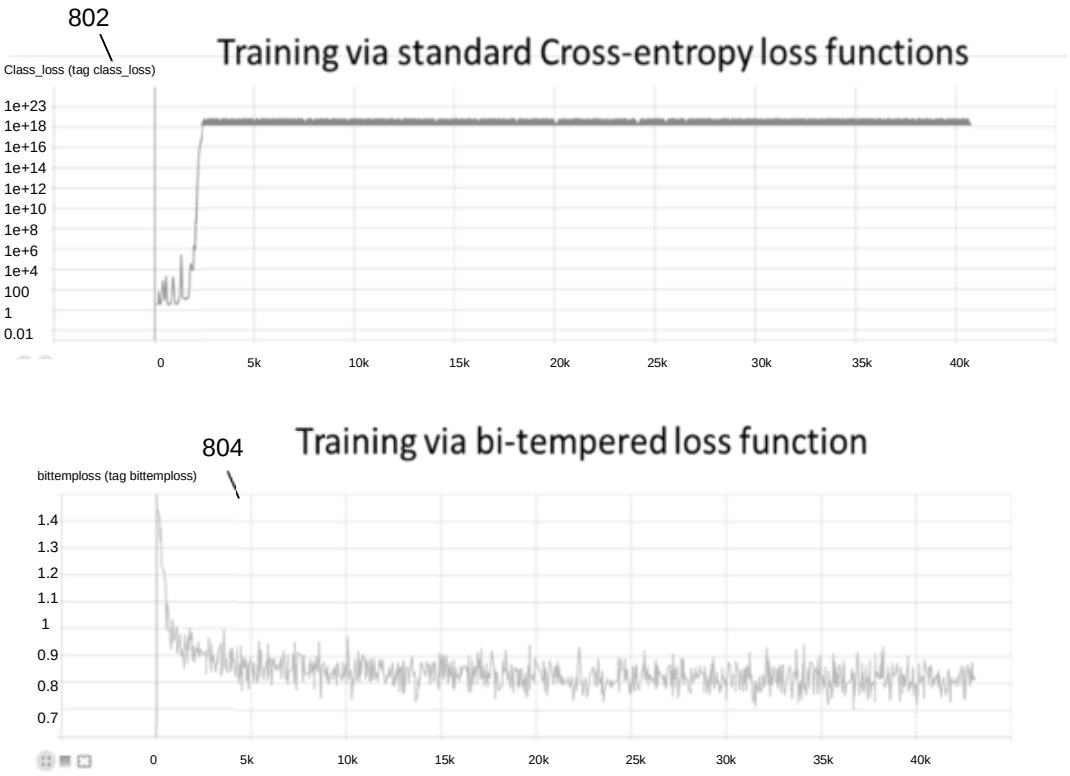

FIGURE 8

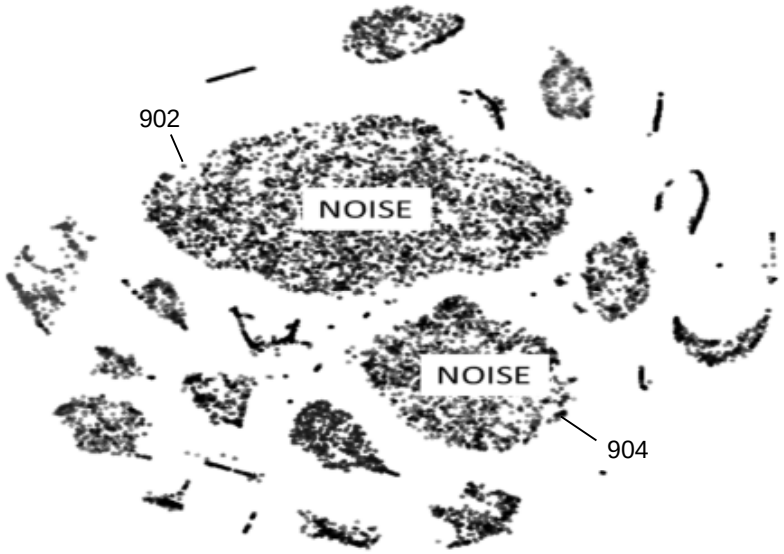

FIGURE 9

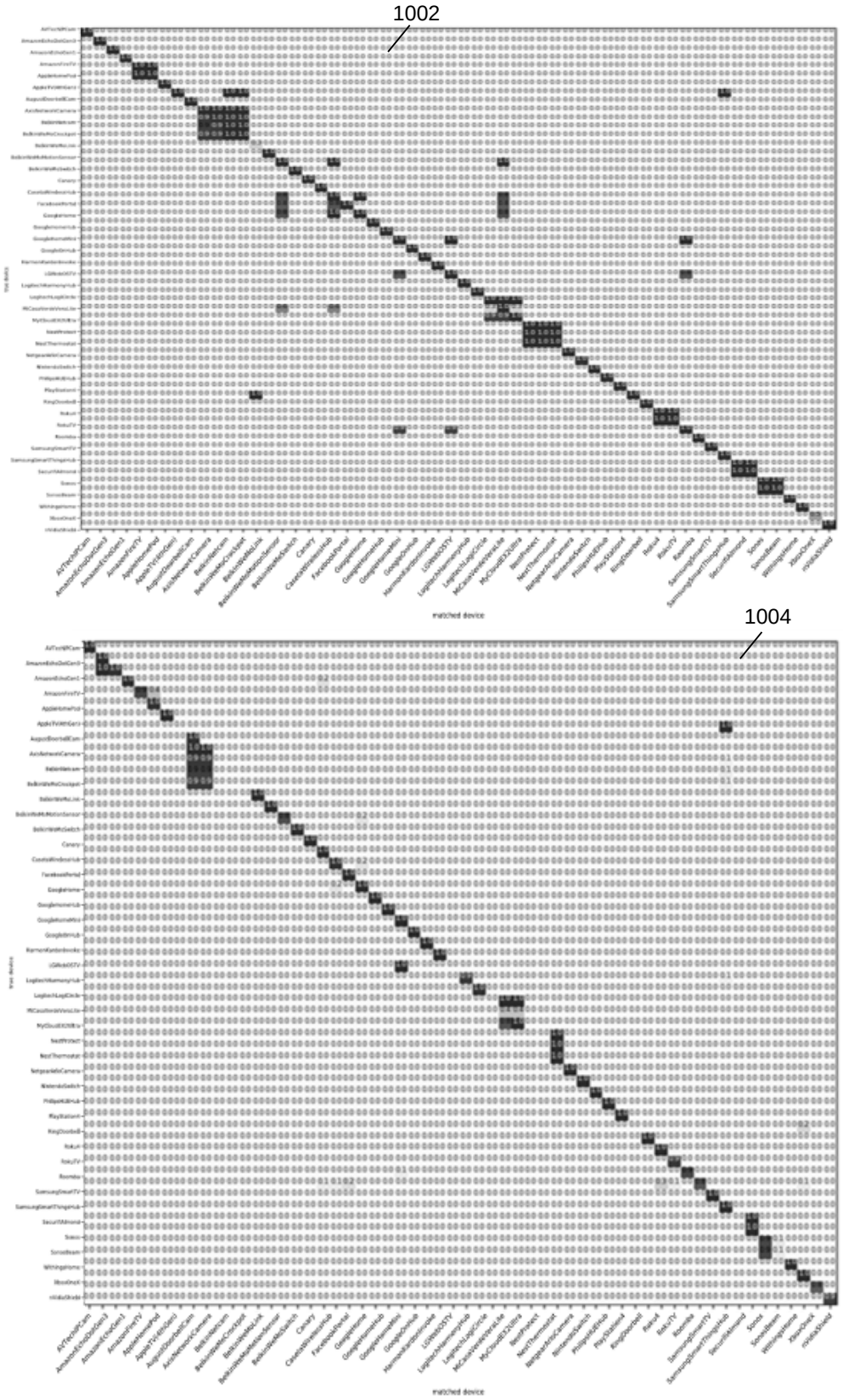

FIGURE 10

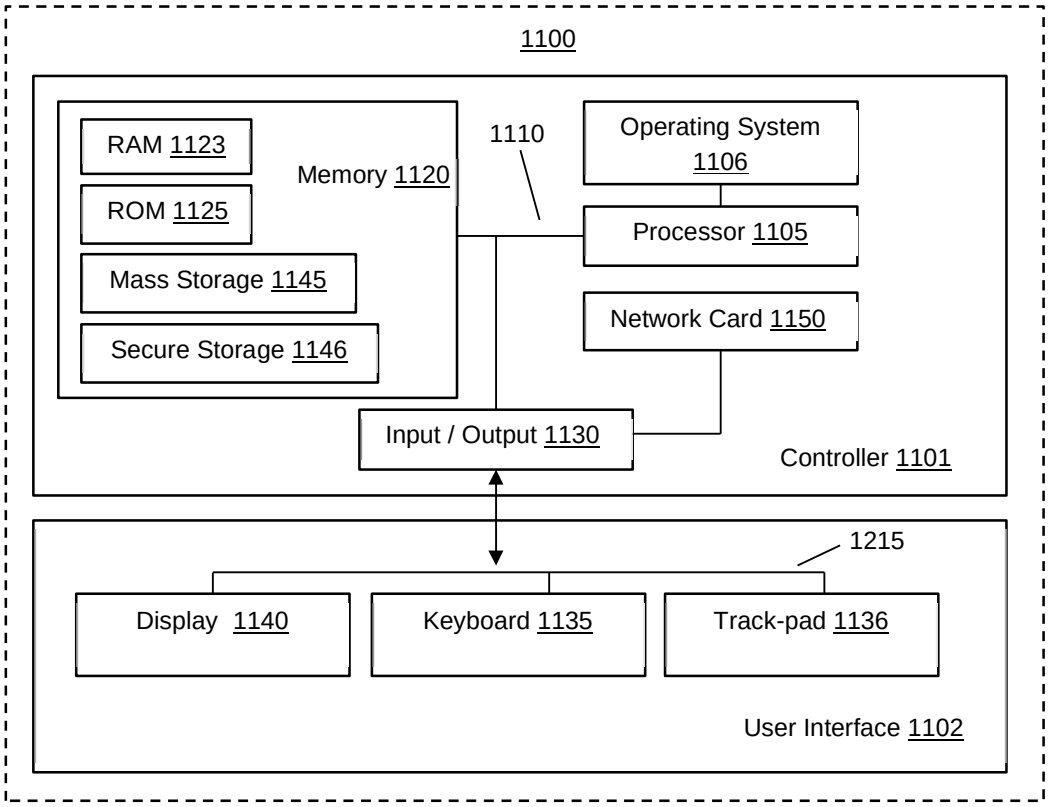
1100
RAM 1123
ROM 1125
Mass Storage 1145
Secure Storage 1146
Memory 1120
1110
Operating System 1106
Processor 1105
Network Card 1150
Input / Output 1130
Controller 1101
1215
Display 1140
Keyboard 1135
Track-pad 1136
User Interface 1102

FIGURE 11