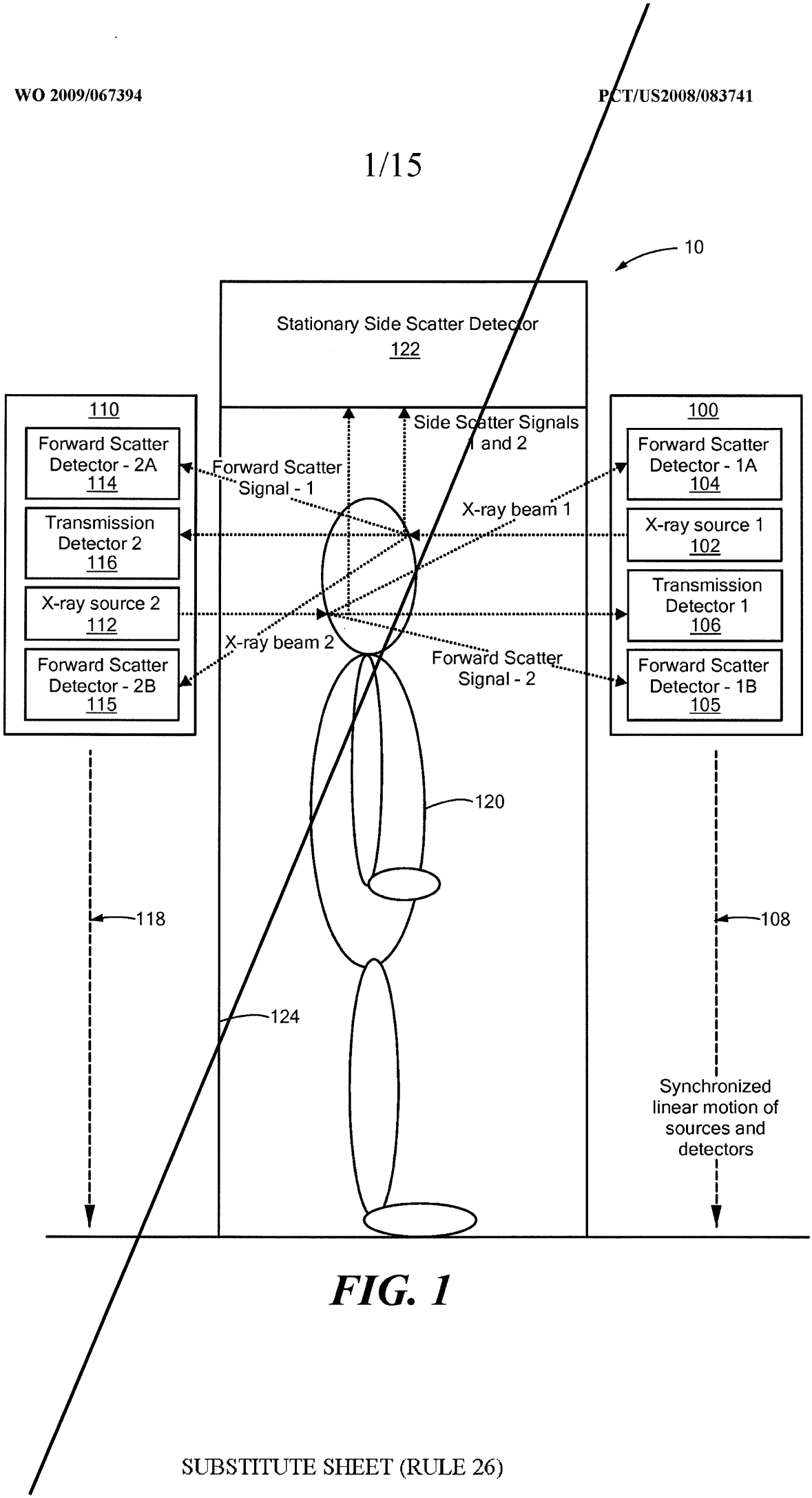
10
Stationary Side Scatter Detector
122
110
Forward Scatter Detector - 2A
114
Transmission Detector 2
116
X-ray source 2
112
Forward Scatter Detector - 2B
115
100
Forward Scatter Detector - 1A
104
X-ray source 1
102
Transmission Detector 1
106
Forward Scatter Detector - 1B
105
Side Scatter Signals 1 and 2
Forward Scatter Signal - 1
X-ray beam 1
X-ray beam 2
Forward Scatter Signal - 2
120
118
108
124
Synchronized linear motion of sources and detectors

FIG. 1

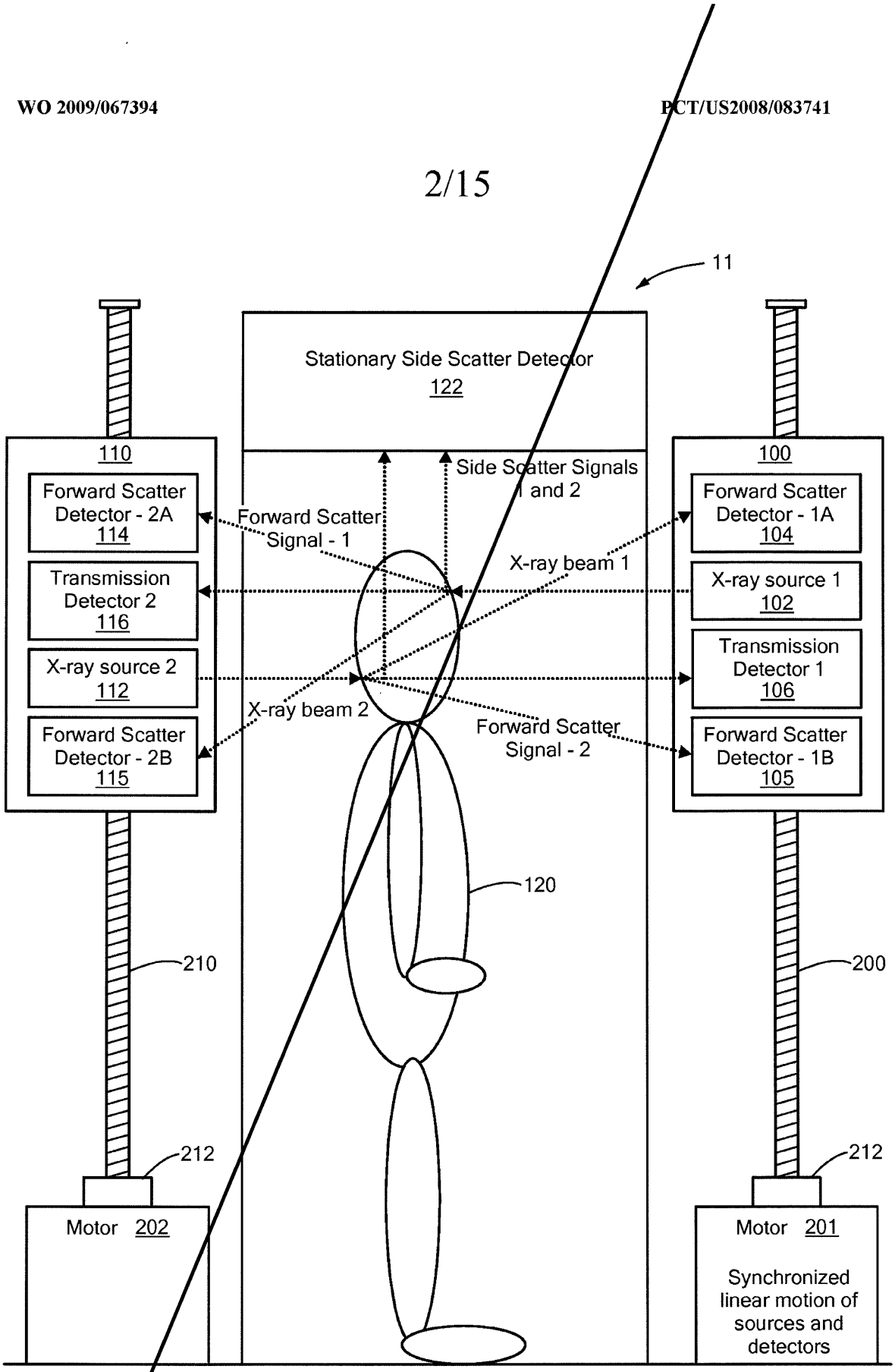
11
Stationary Side Scatter Detector
122
110
Forward Scatter Detector - 2A
114
Transmission Detector 2
116
X-ray source 2
112
Forward Scatter Detector - 2B
115
Side Scatter Signals 1 and 2
Forward Scatter Signal - 1
X-ray beam 1
X-ray beam 2
Forward Scatter Signal - 2
100
Forward Scatter Detector - 1A
104
X-ray source 1
102
Transmission Detector 1
106
Forward Scatter Detector - 1B
105
120
210
200
212
212
Motor 202
Motor 201
Synchronized linear motion of sources and detectors

FIG. 2A

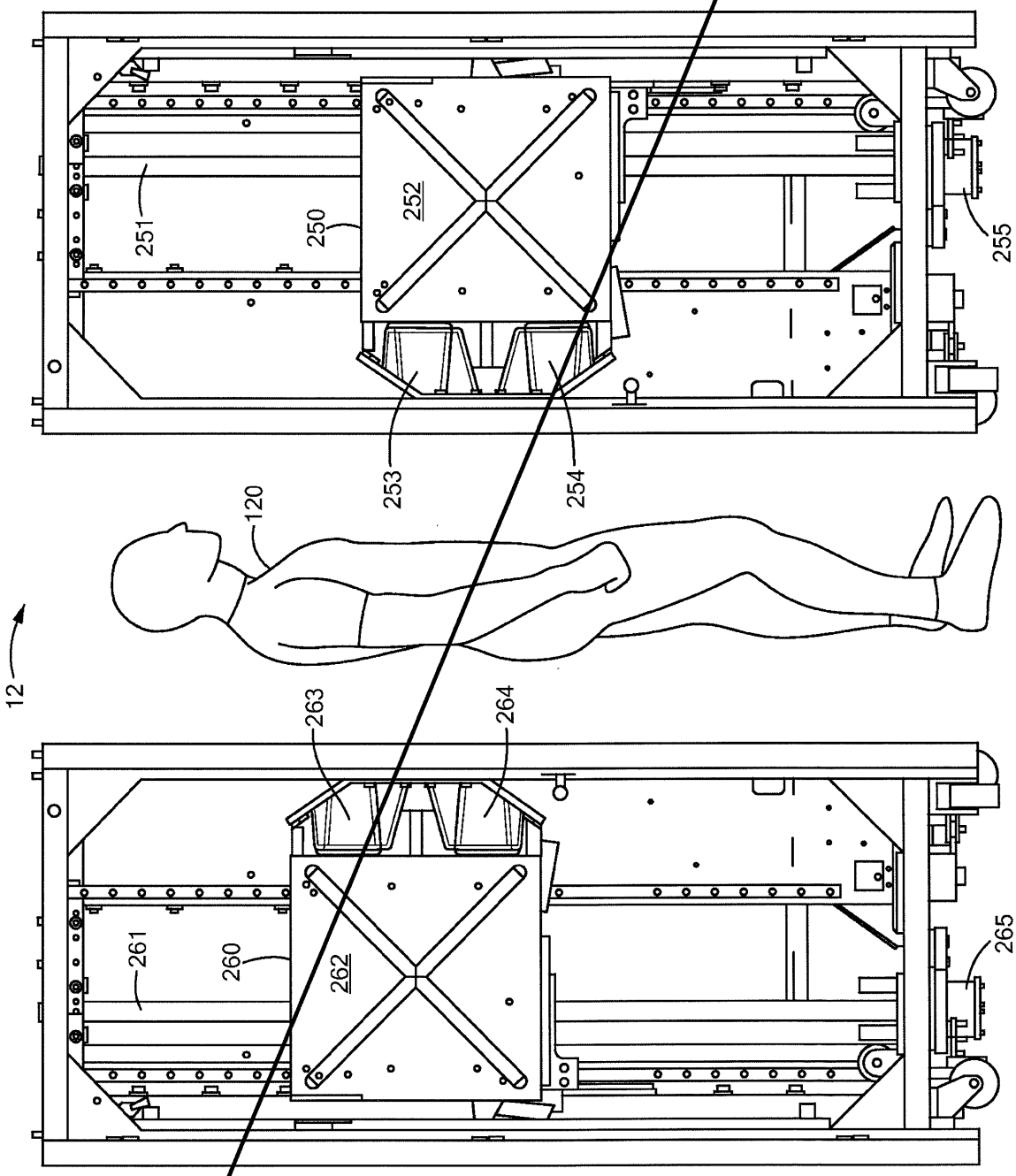

FIG. 2B

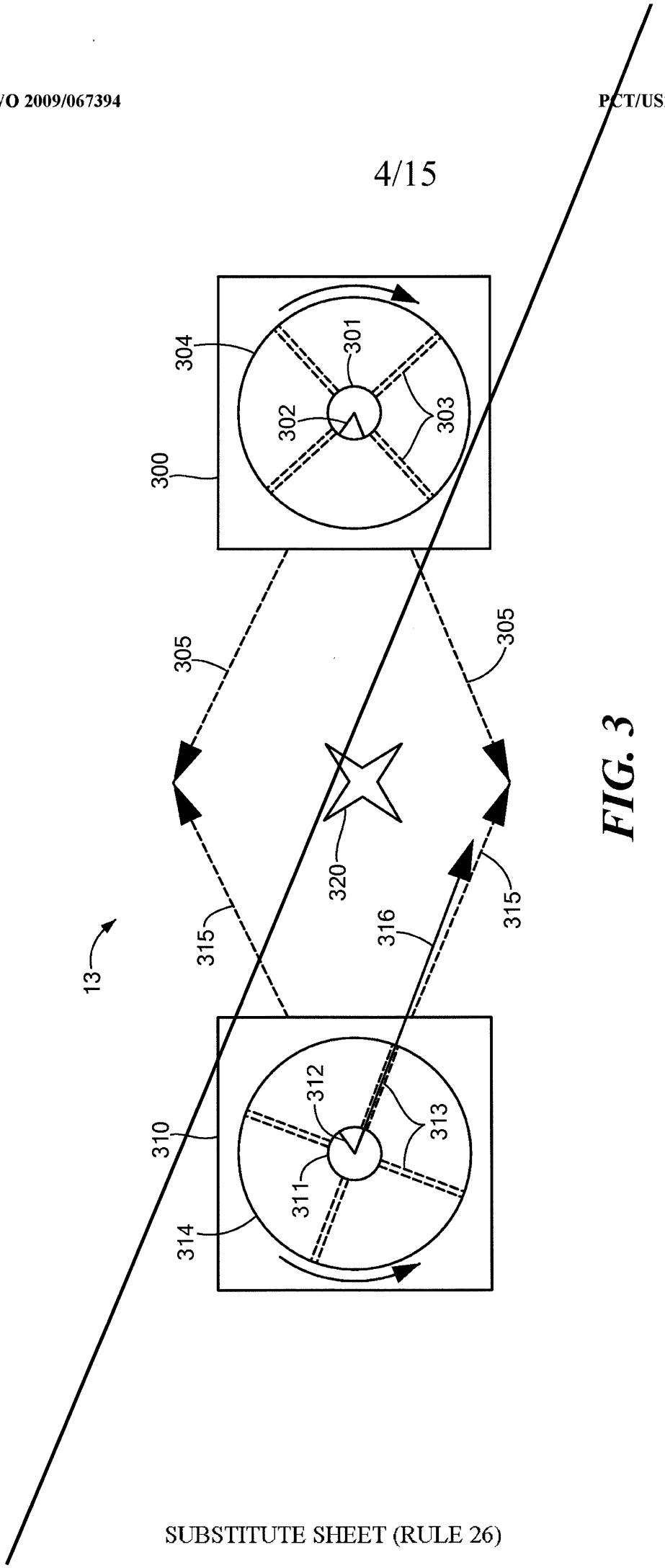
304
301
303
302
300
305
305
320
315
316
315
13
310
312
313
311
314

FIG. 3

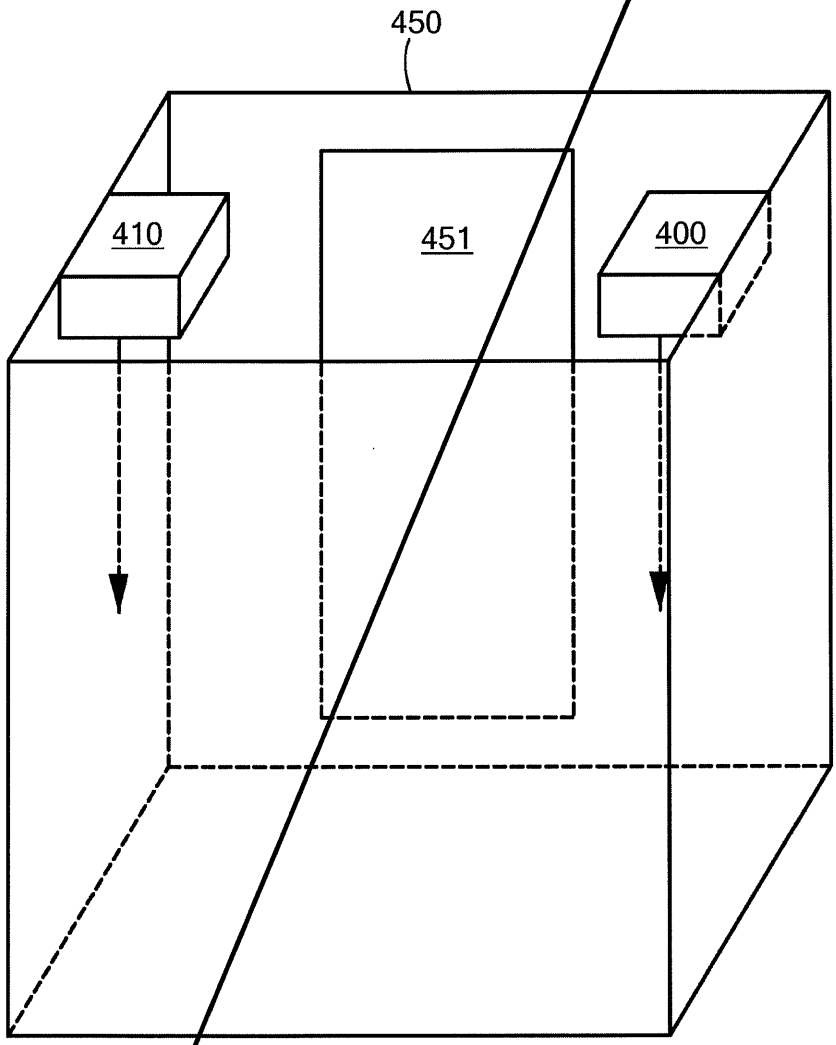

FIG. 4

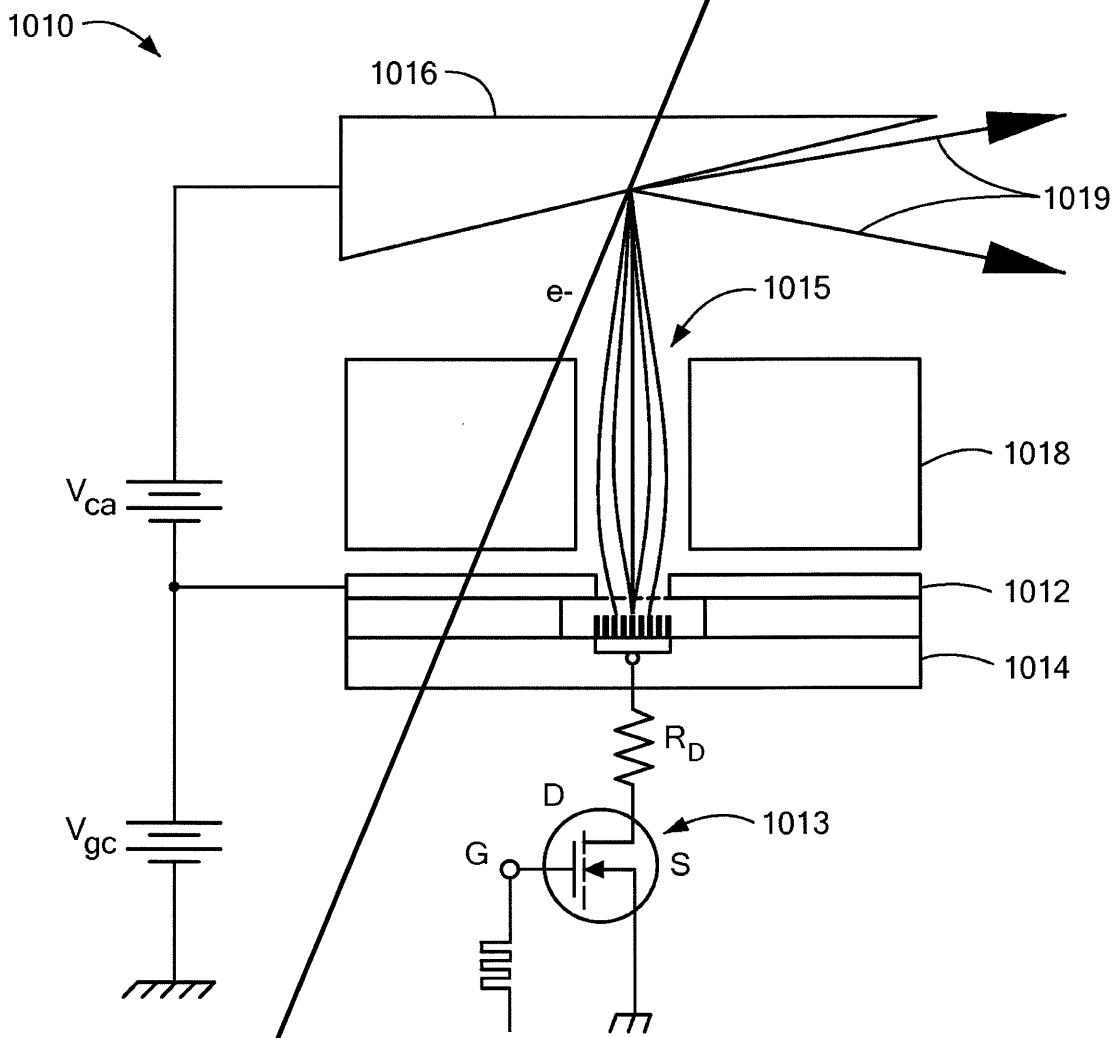

FIG. 5

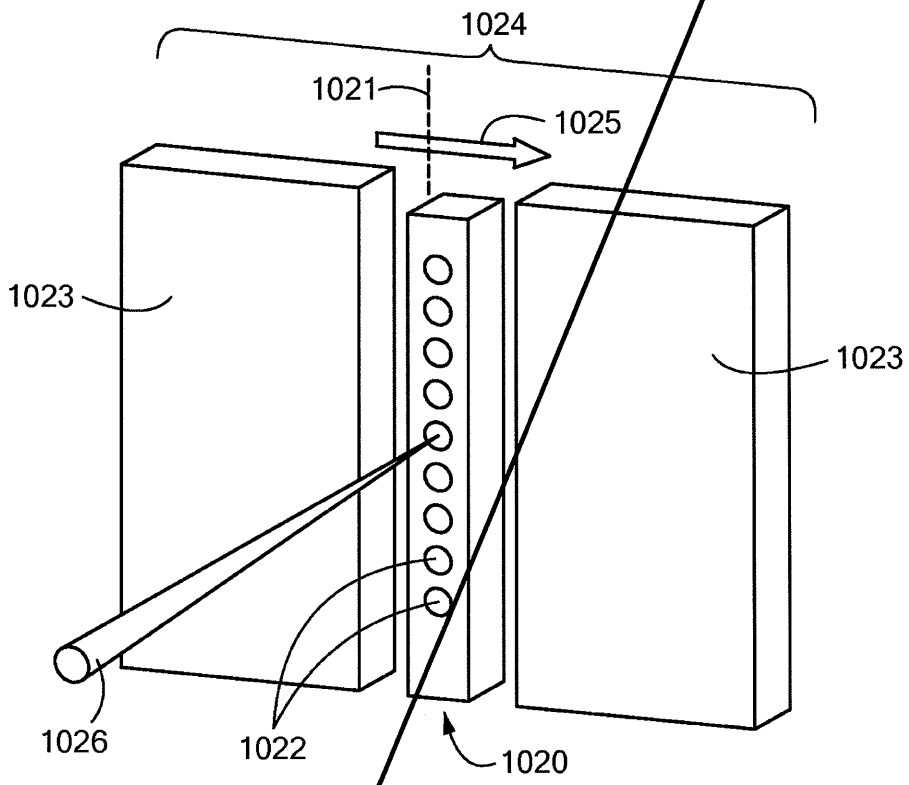

FIG. 6

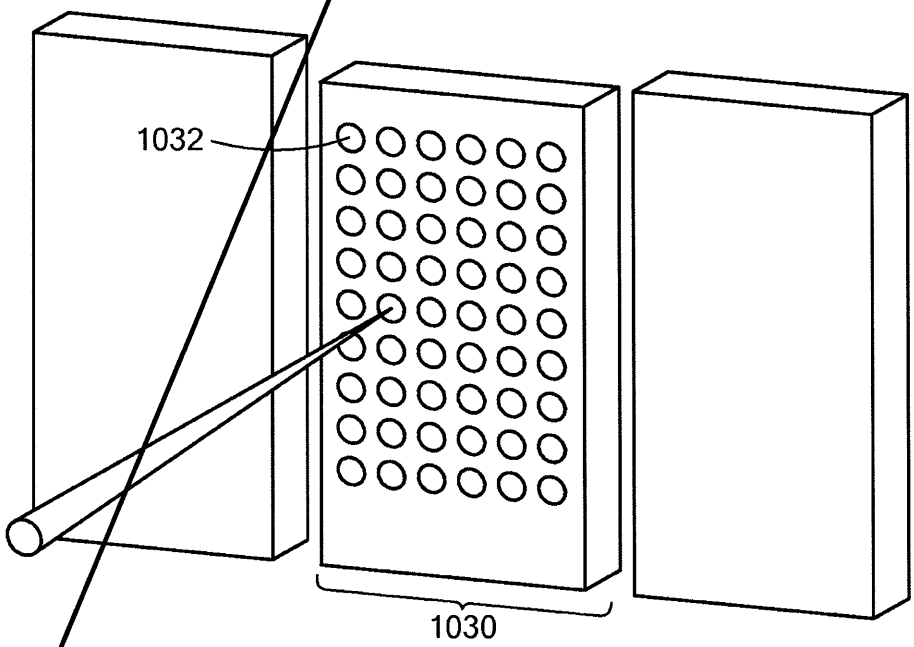

FIG. 7

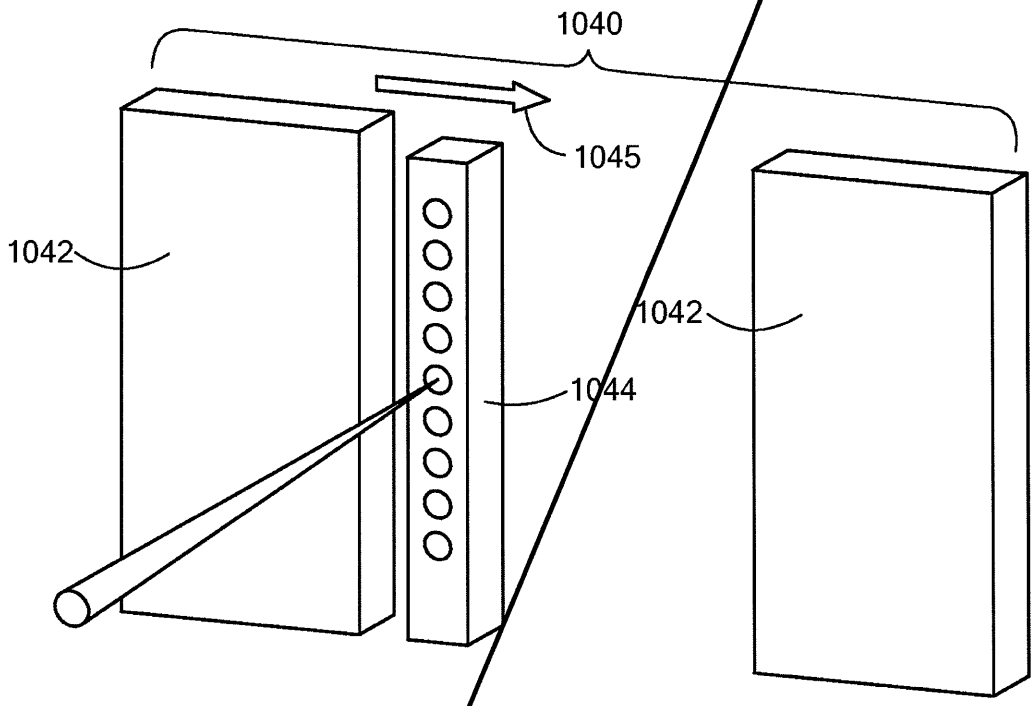

FIG. 8

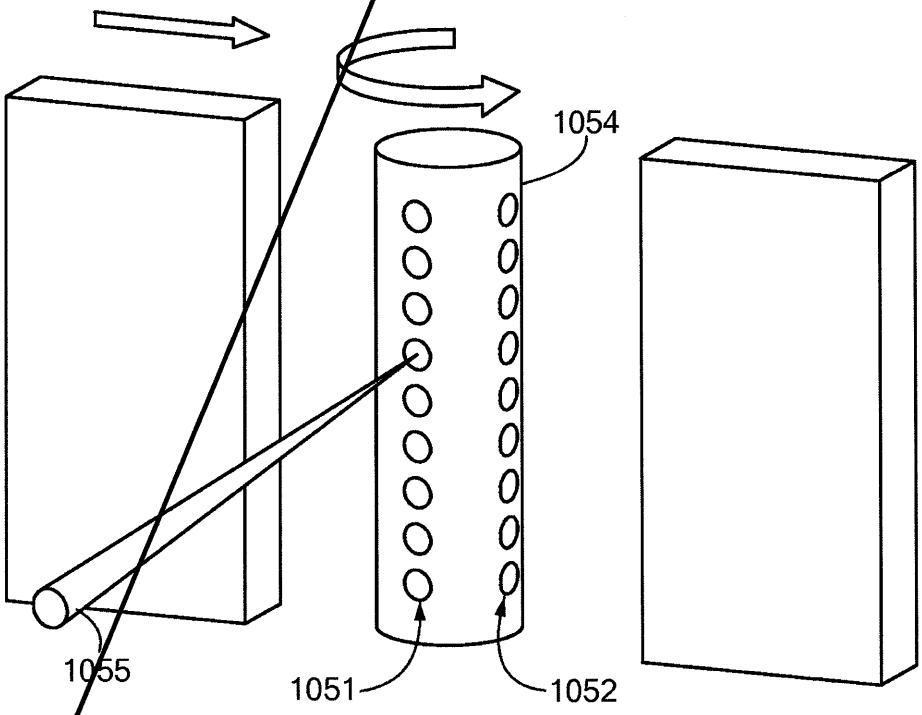

FIG. 9

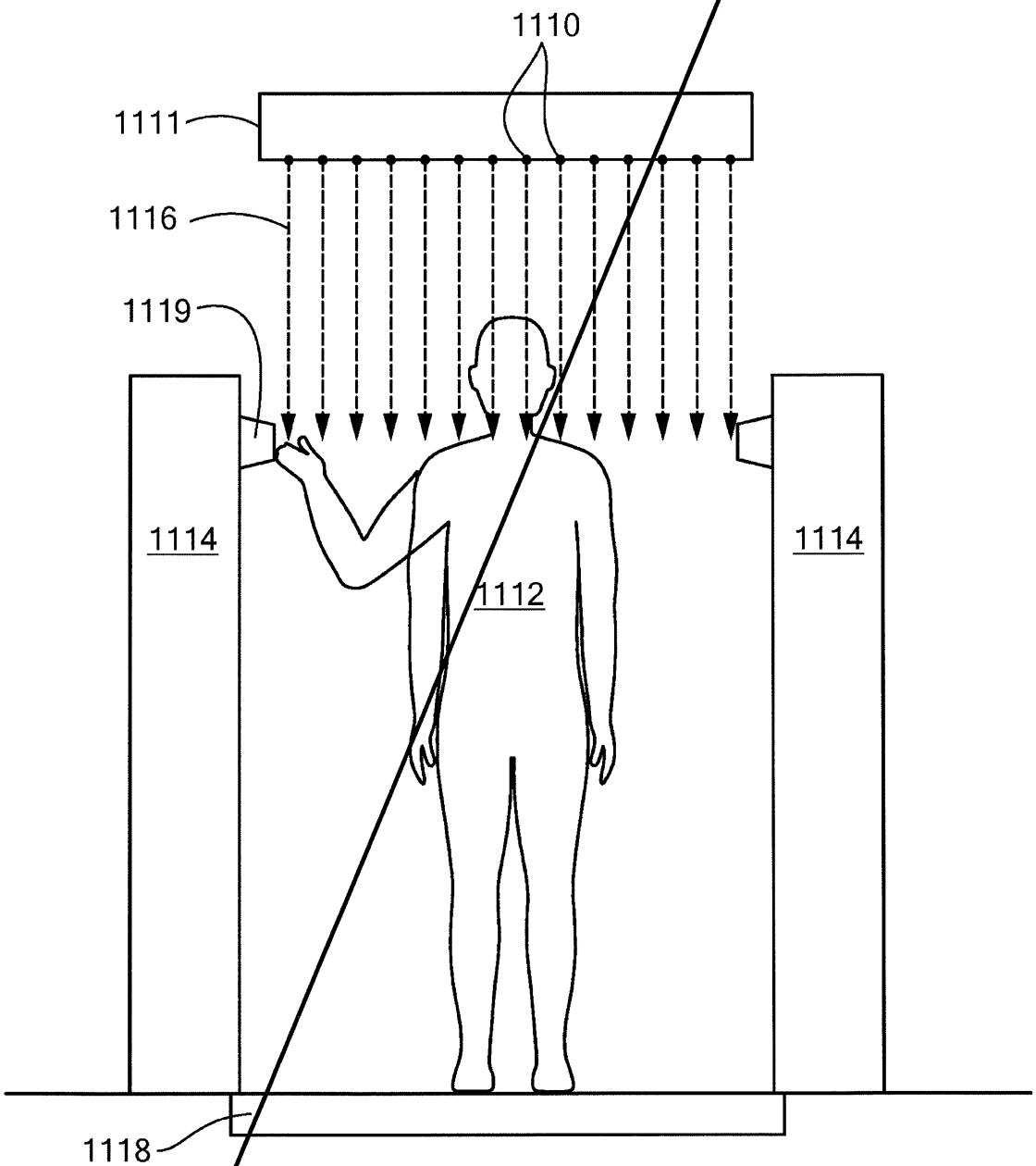

FIG. 10A

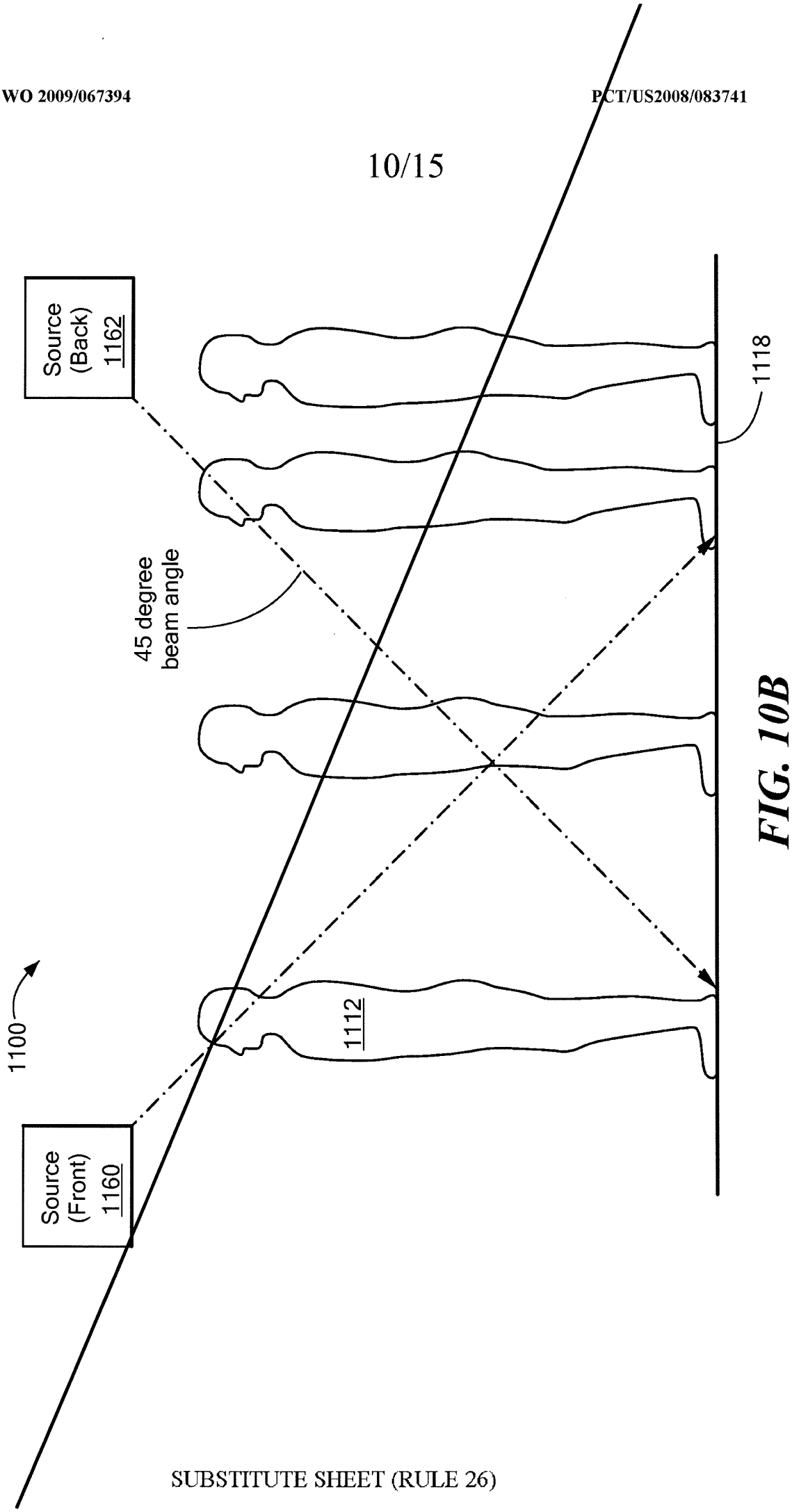
Source (Back) 1162
45 degree beam angle
1118
1100
1112
Source (Front) 1160

FIG. 10B

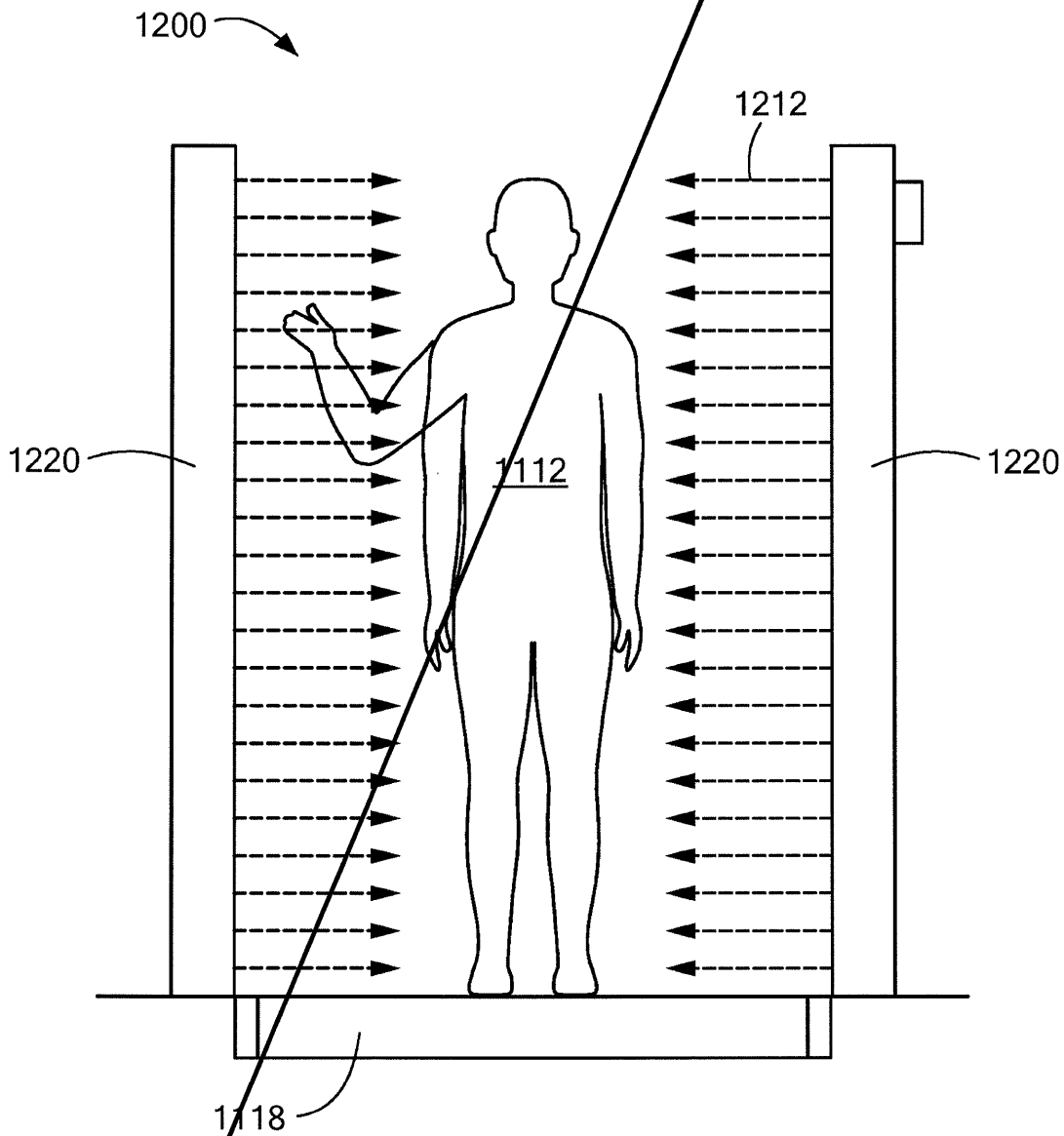

FIG. 11A

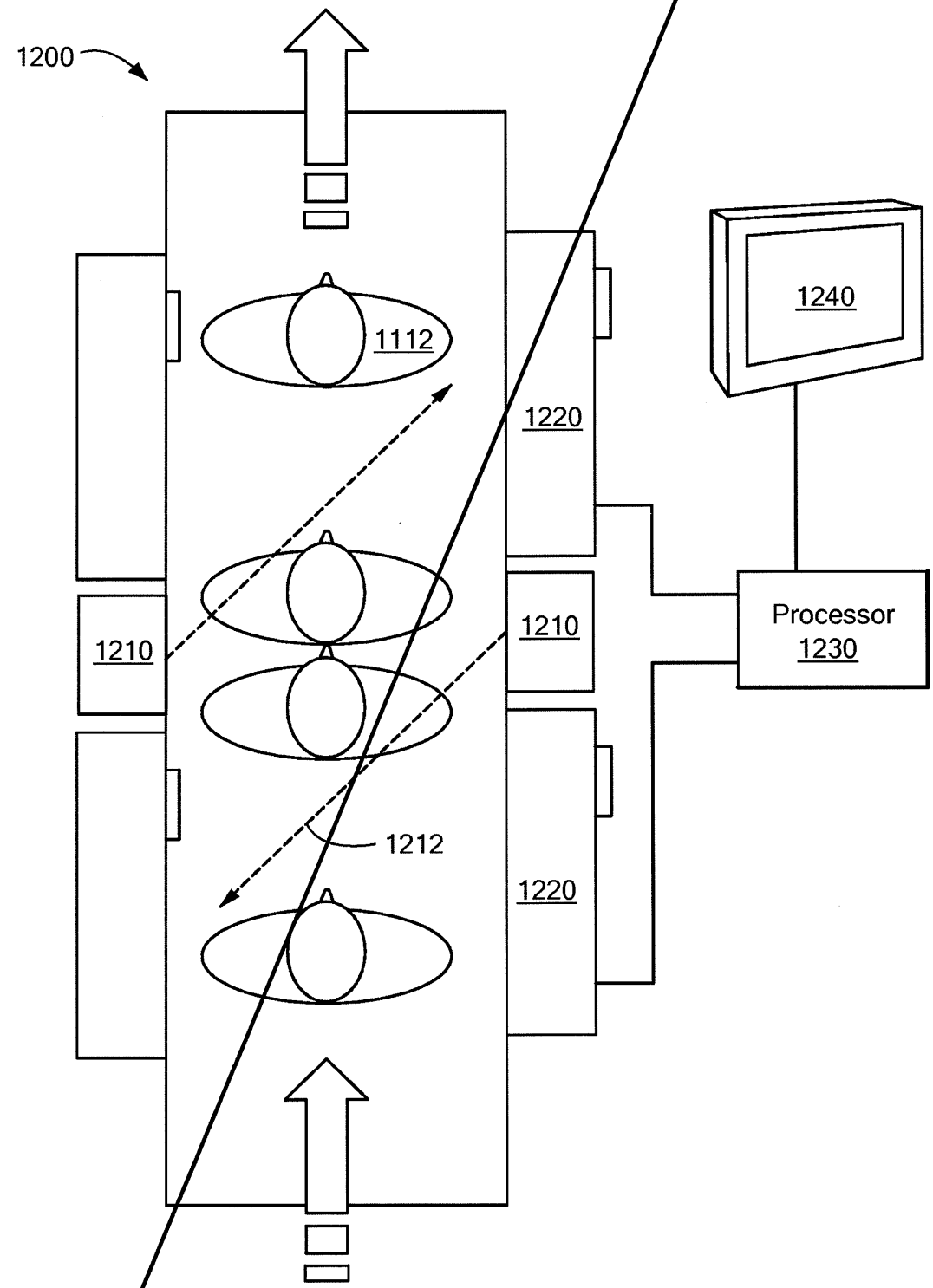

FIG. 11B

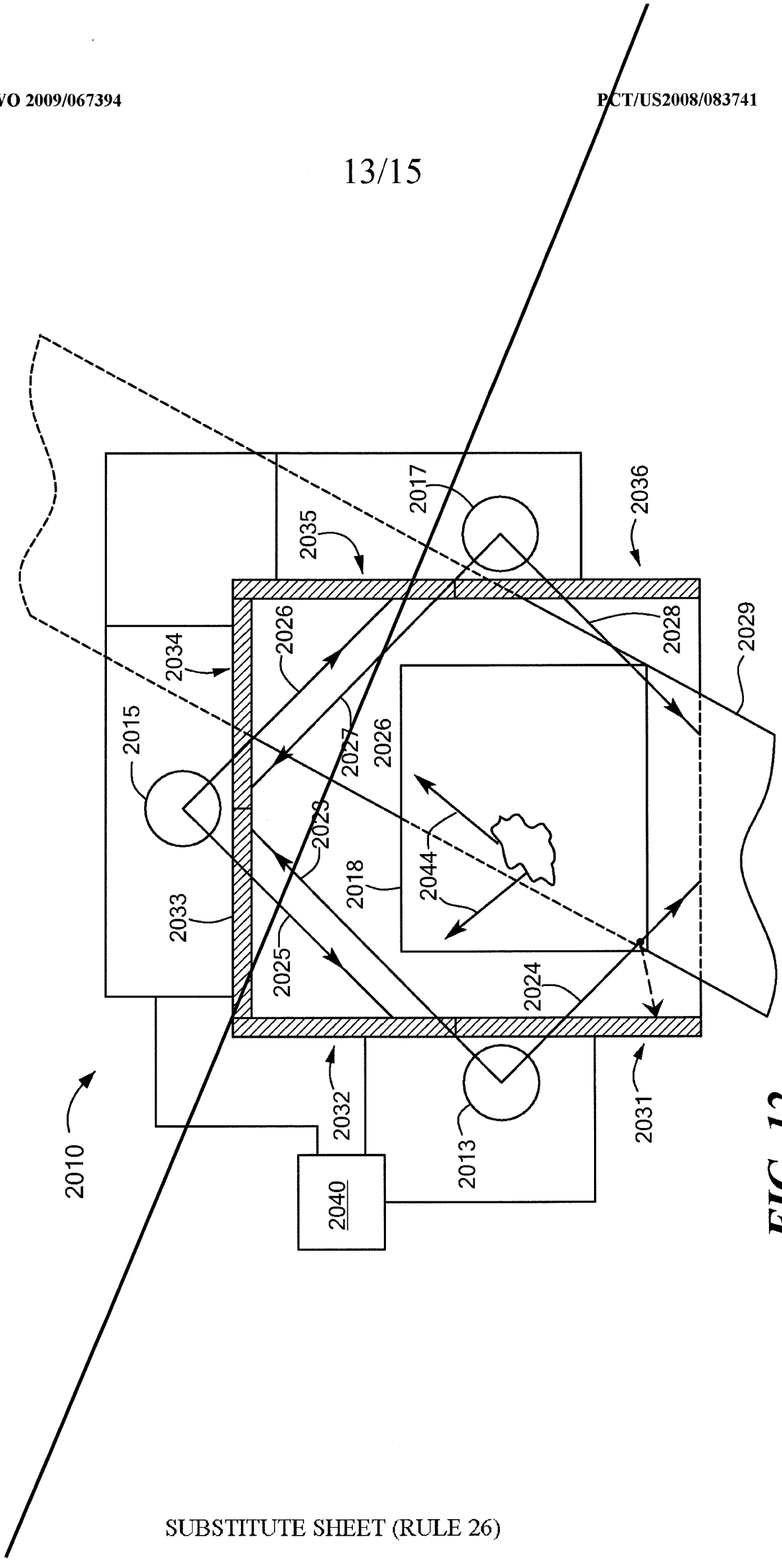
2010
2013
2015
2017
2018
2023
2024
2025
2026
2027
2028
2029
2031
2032
2033
2034
2035
2036
2040
2044

FIG. 12

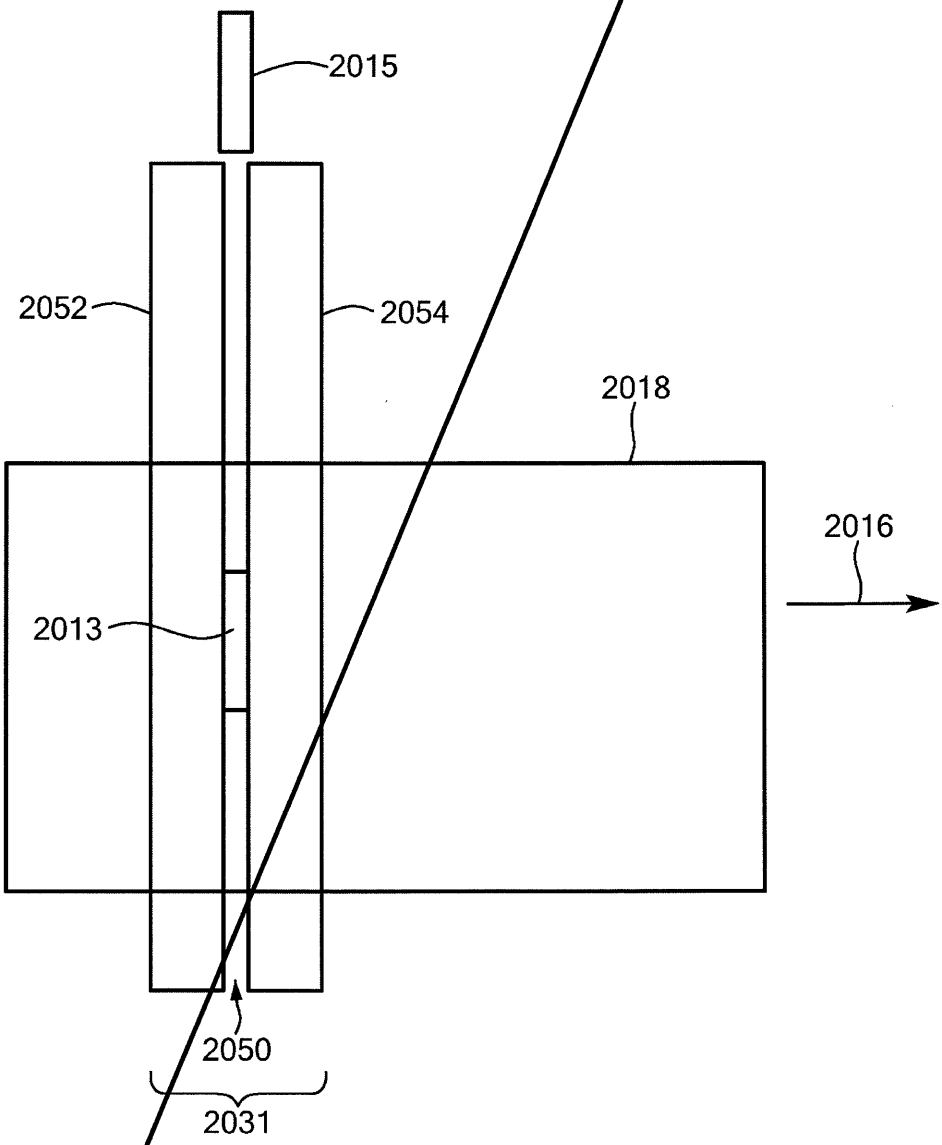

FIG. 13

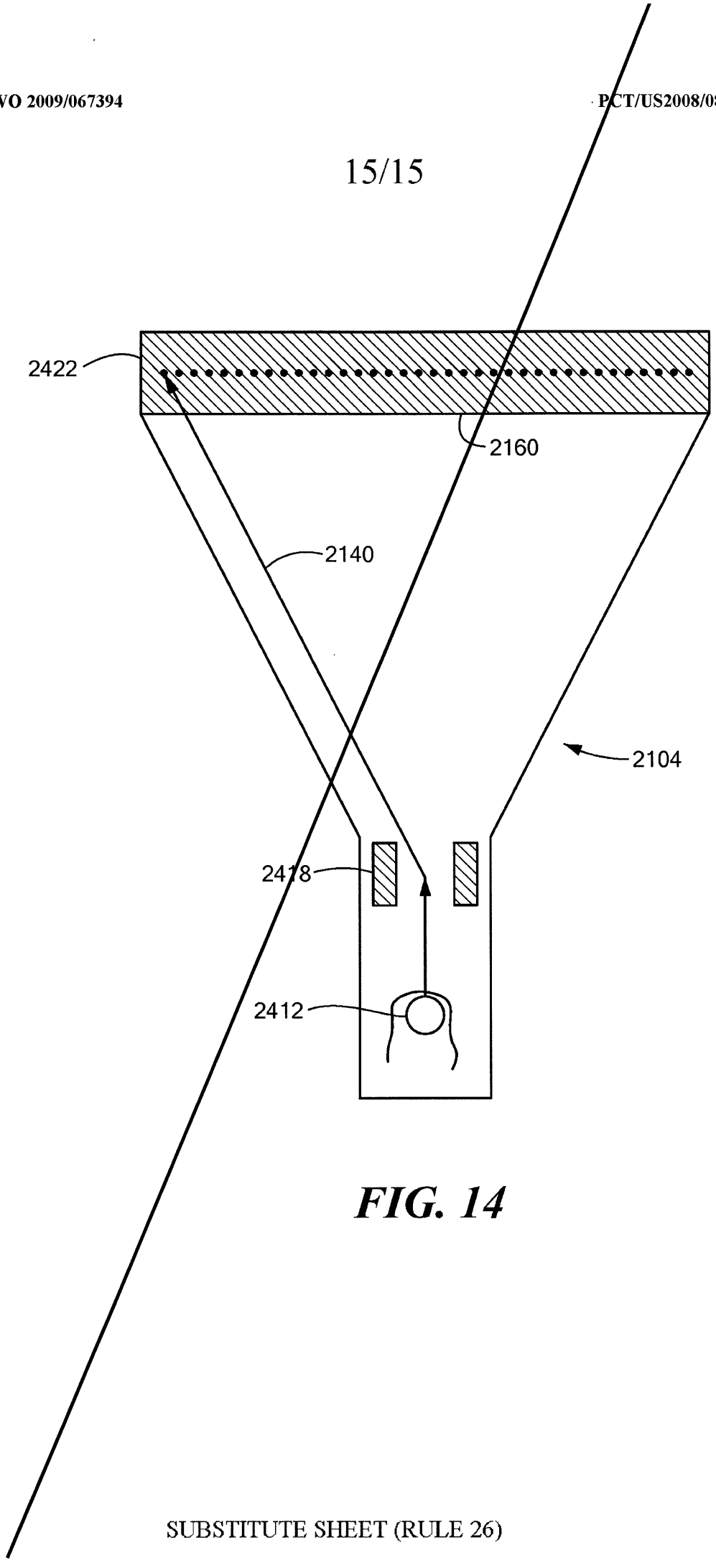

FIG. 14

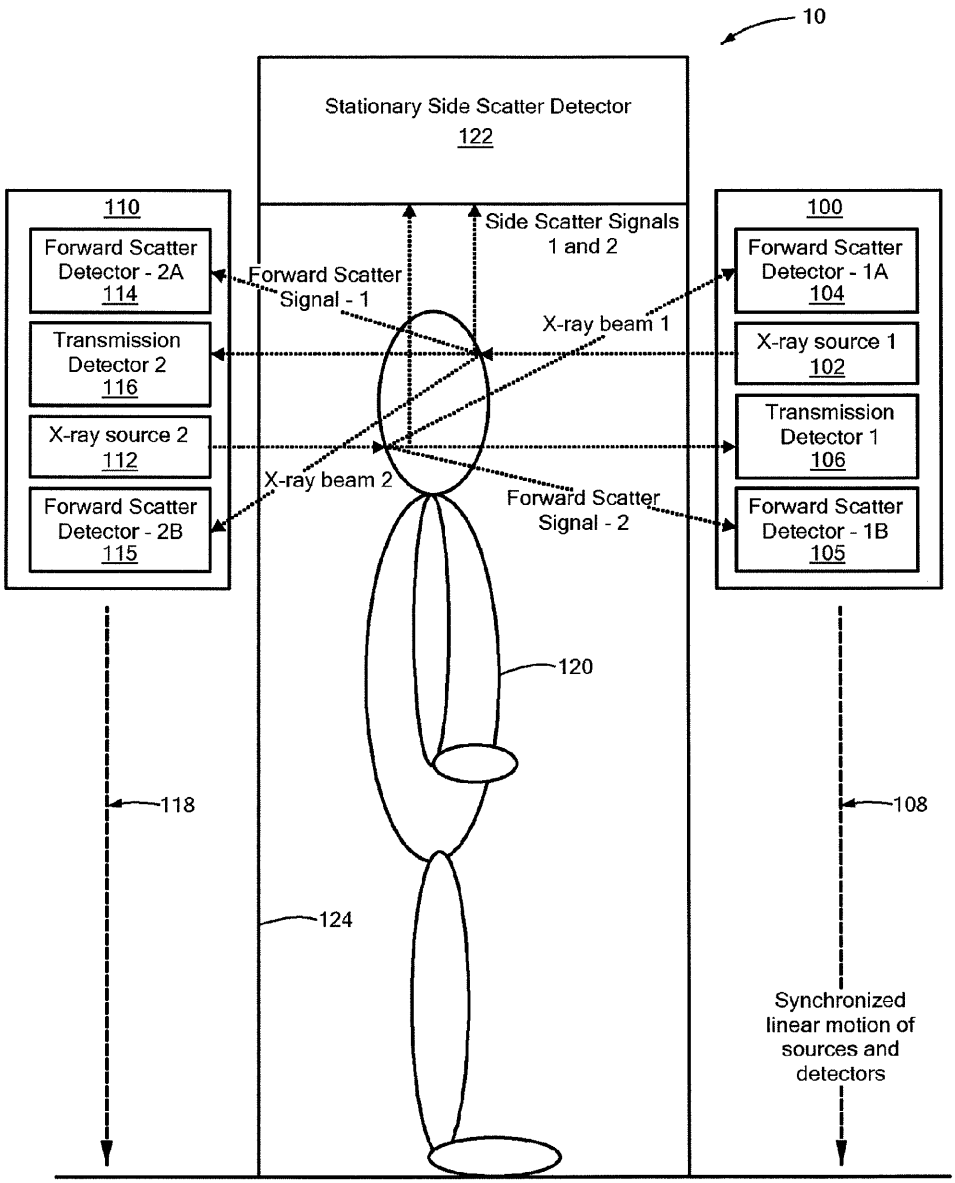
10
Stationary Side Scatter Detector
122
110
Forward Scatter Detector - 2A
114
Transmission Detector 2
116
X-ray source 2
112
Forward Scatter Detector - 2B
115
Forward Scatter Signal - 1
Side Scatter Signals 1 and 2
X-ray beam 1
X-ray beam 2
Forward Scatter Signal - 2
100
Forward Scatter Detector - 1A
104
X-ray source 1
102
Transmission Detector 1
106
Forward Scatter Detector - 1B
105
120
118
108
124
Synchronized linear motion of sources and detectors

FIG. 1

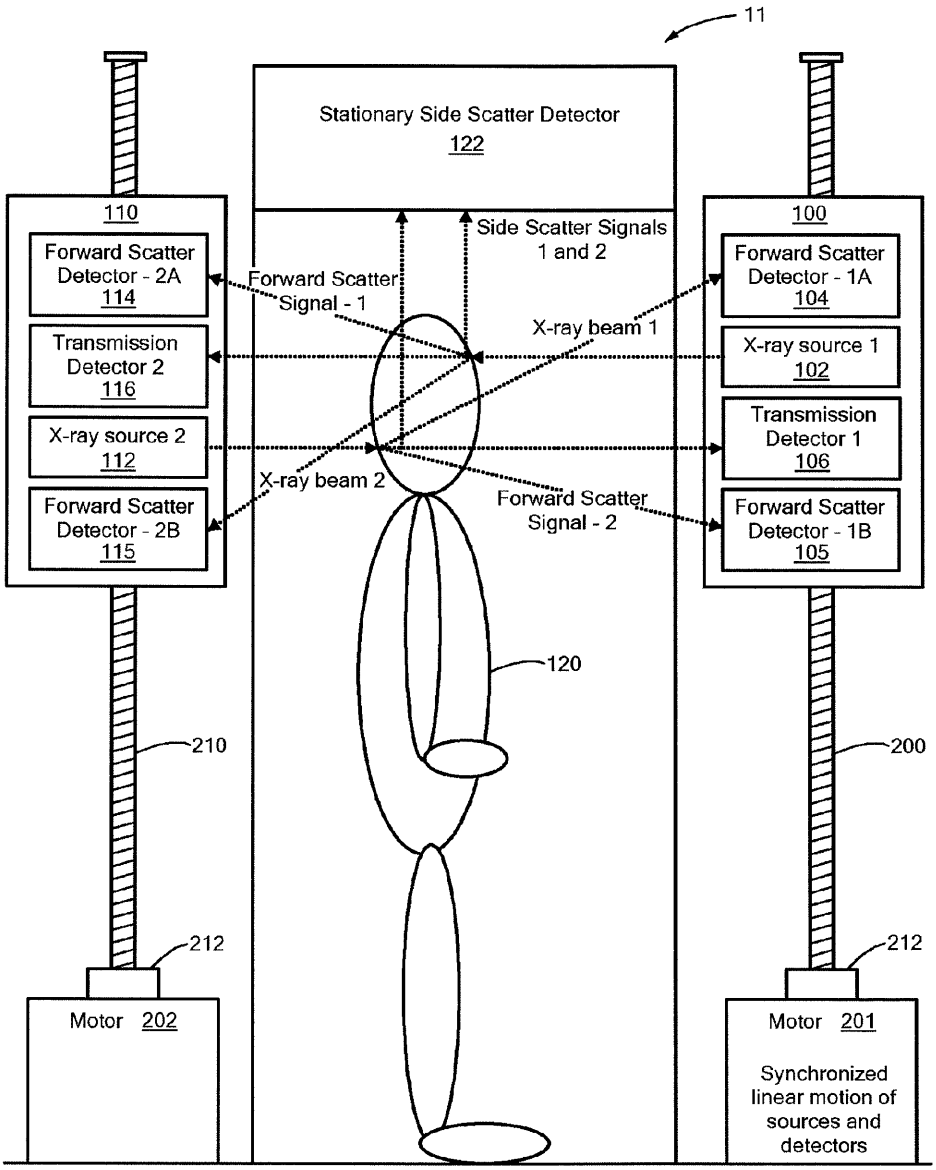
11
Stationary Side Scatter Detector
122
110
Forward Scatter Detector - 2A
114
Transmission Detector 2
116
X-ray source 2
112
Forward Scatter Detector - 2B
115
Side Scatter Signals 1 and 2
Forward Scatter Signal - 1
X-ray beam 1
X-ray beam 2
Forward Scatter Signal - 2
100
Forward Scatter Detector - 1A
104
X-ray source 1
102
Transmission Detector 1
106
Forward Scatter Detector - 1B
105
120
210
200
212
212
Motor 202
Motor 201
Synchronized linear motion of sources and detectors

FIG. 2A

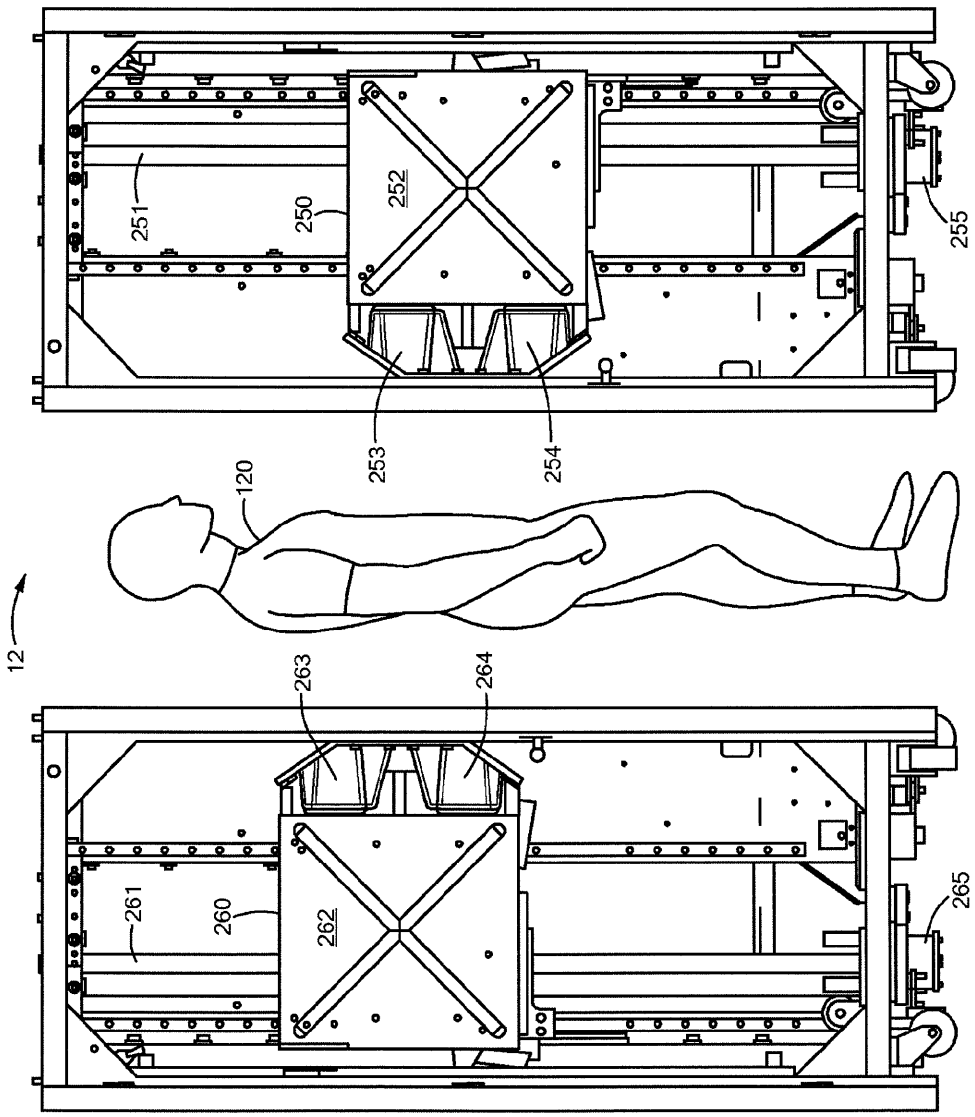

FIG. 2B

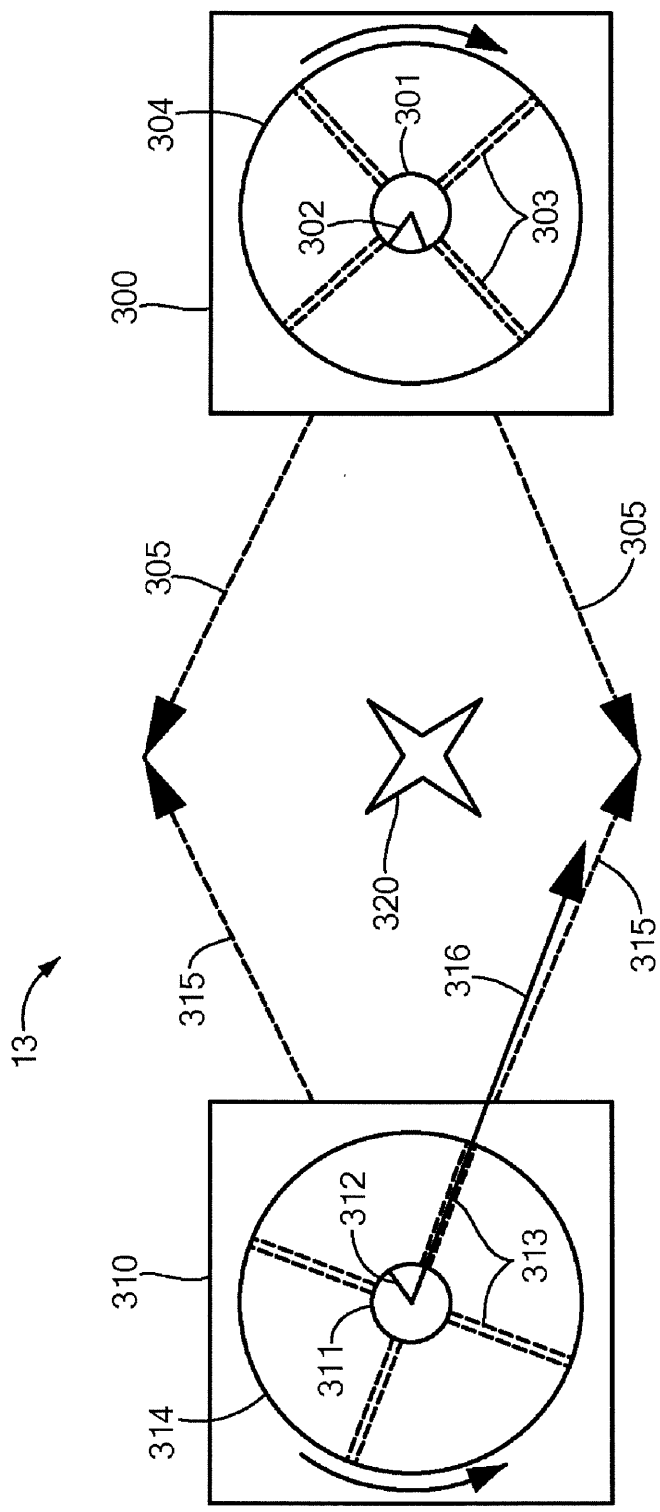
13
300
301
302
303
304
305
305
310
311
312
313
314
315
315
316
320

FIG. 3

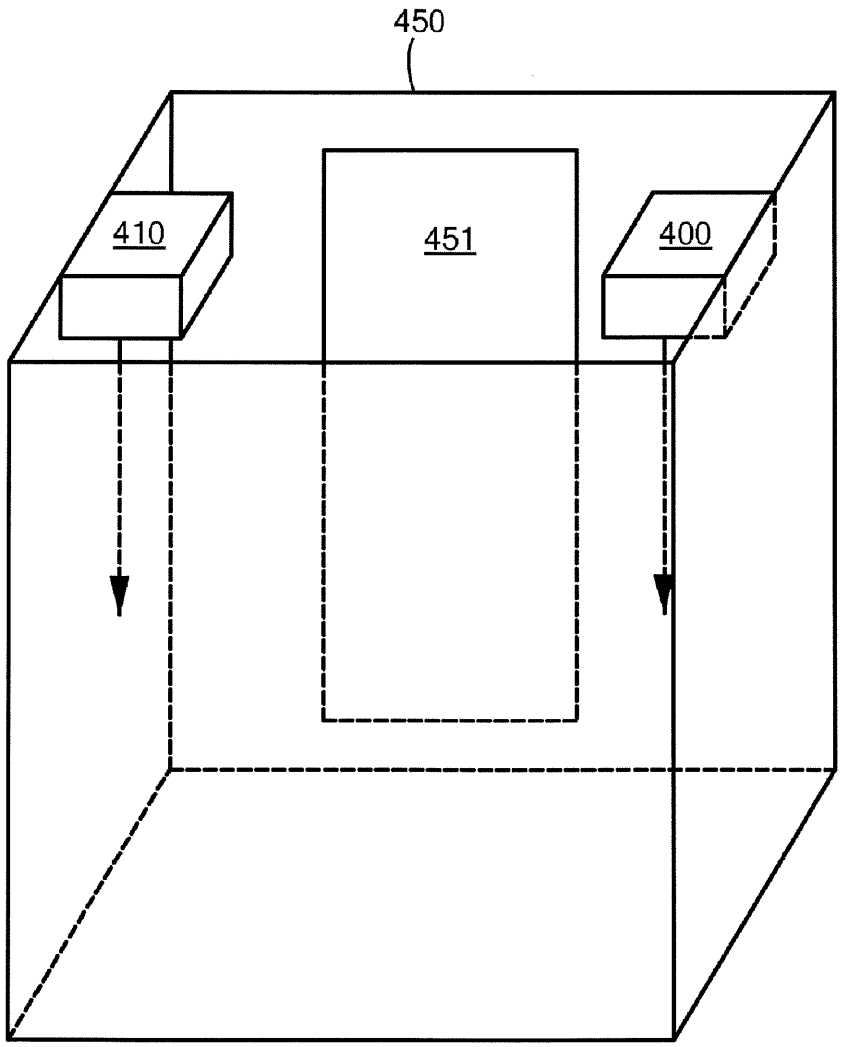

FIG. 4

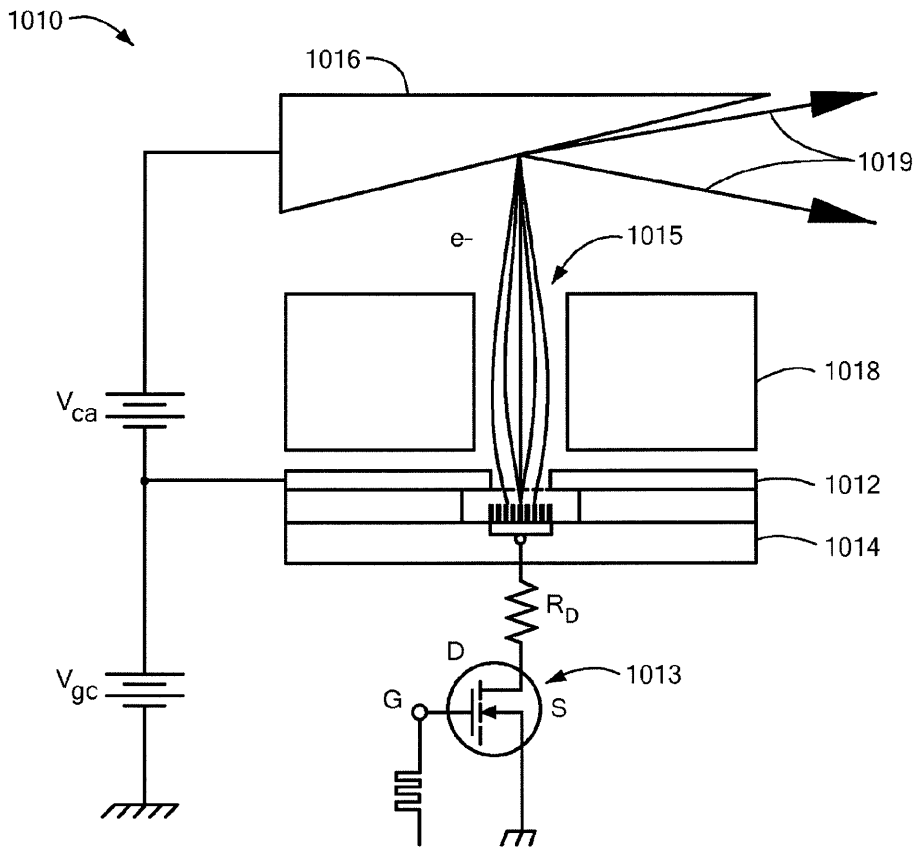

FIG. 5

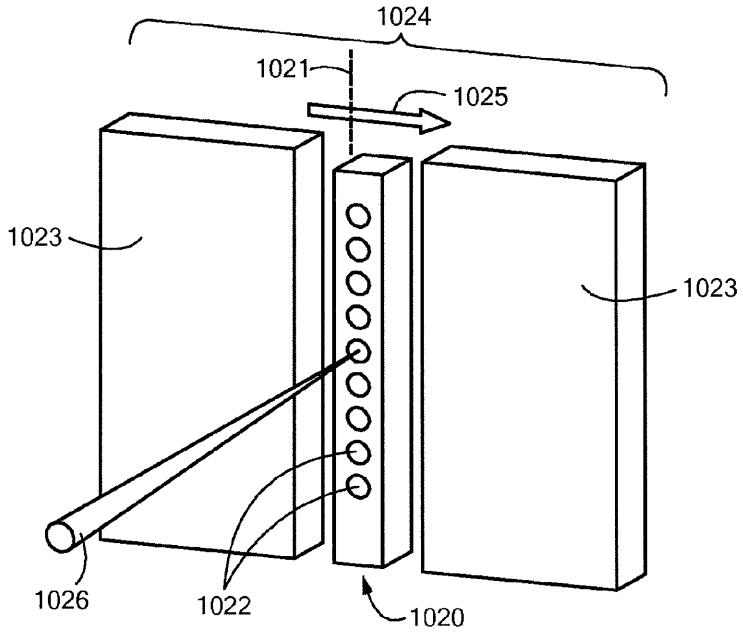

FIG. 6

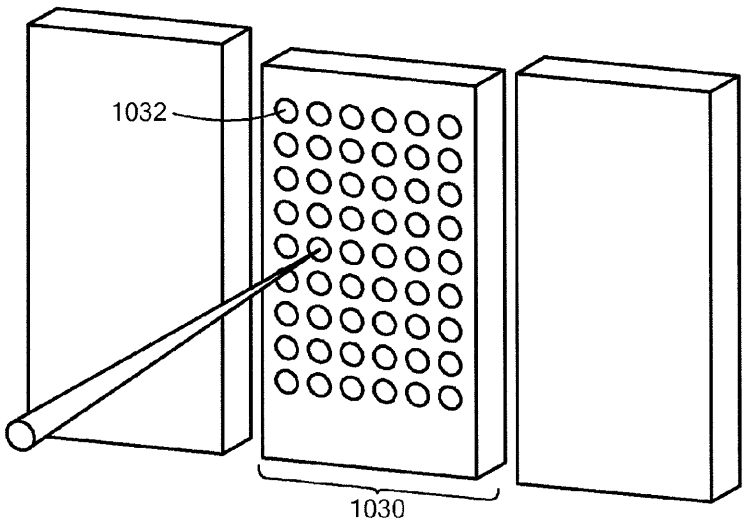

FIG. 7

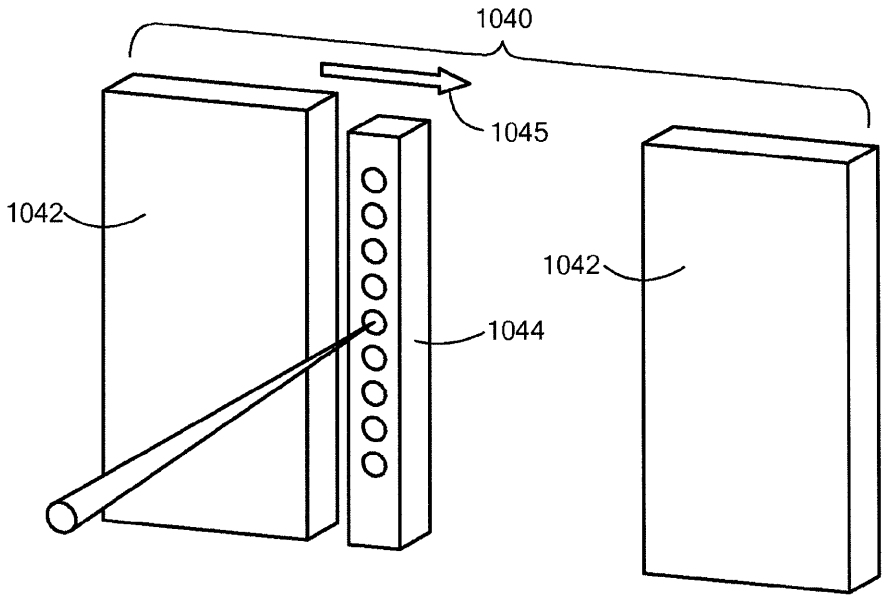

FIG. 8

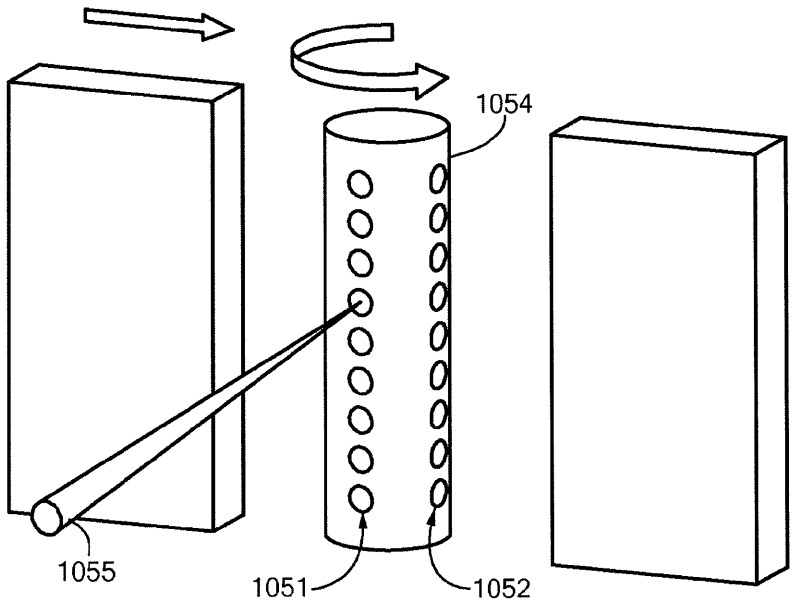

FIG. 9

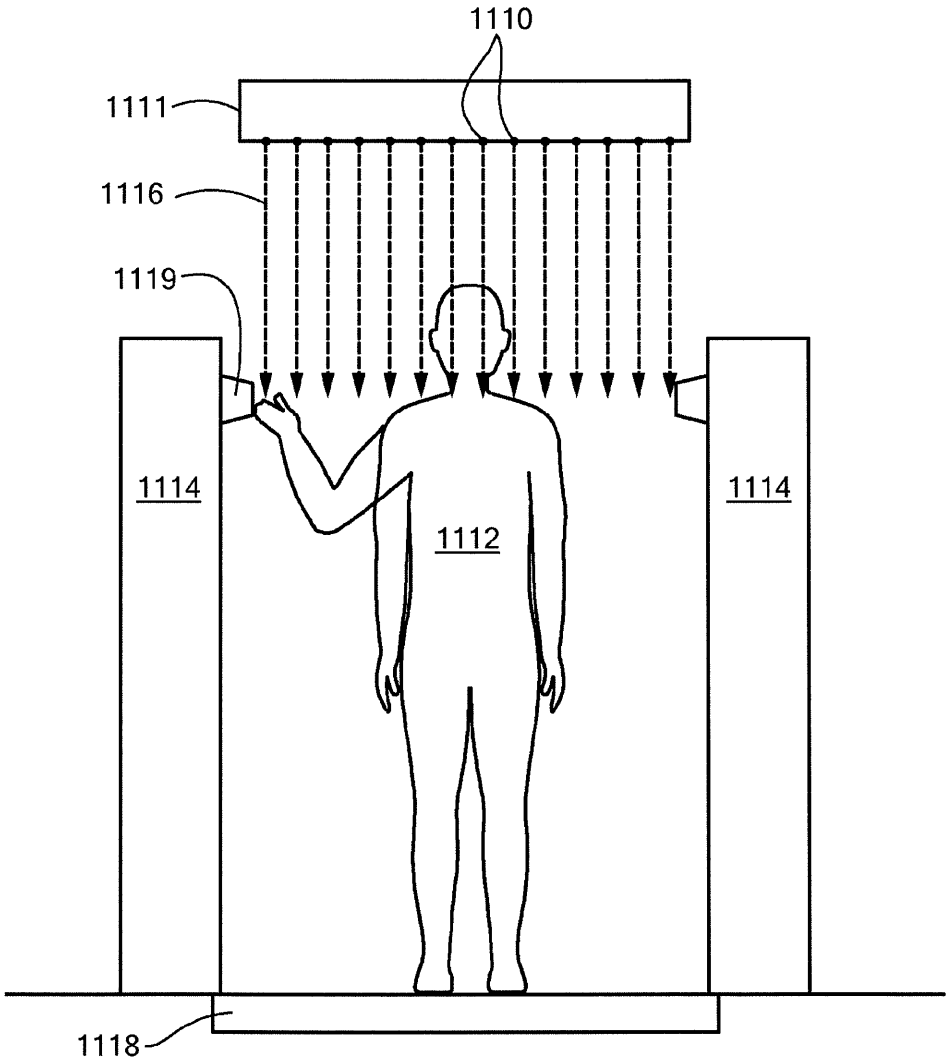

FIG. 10A

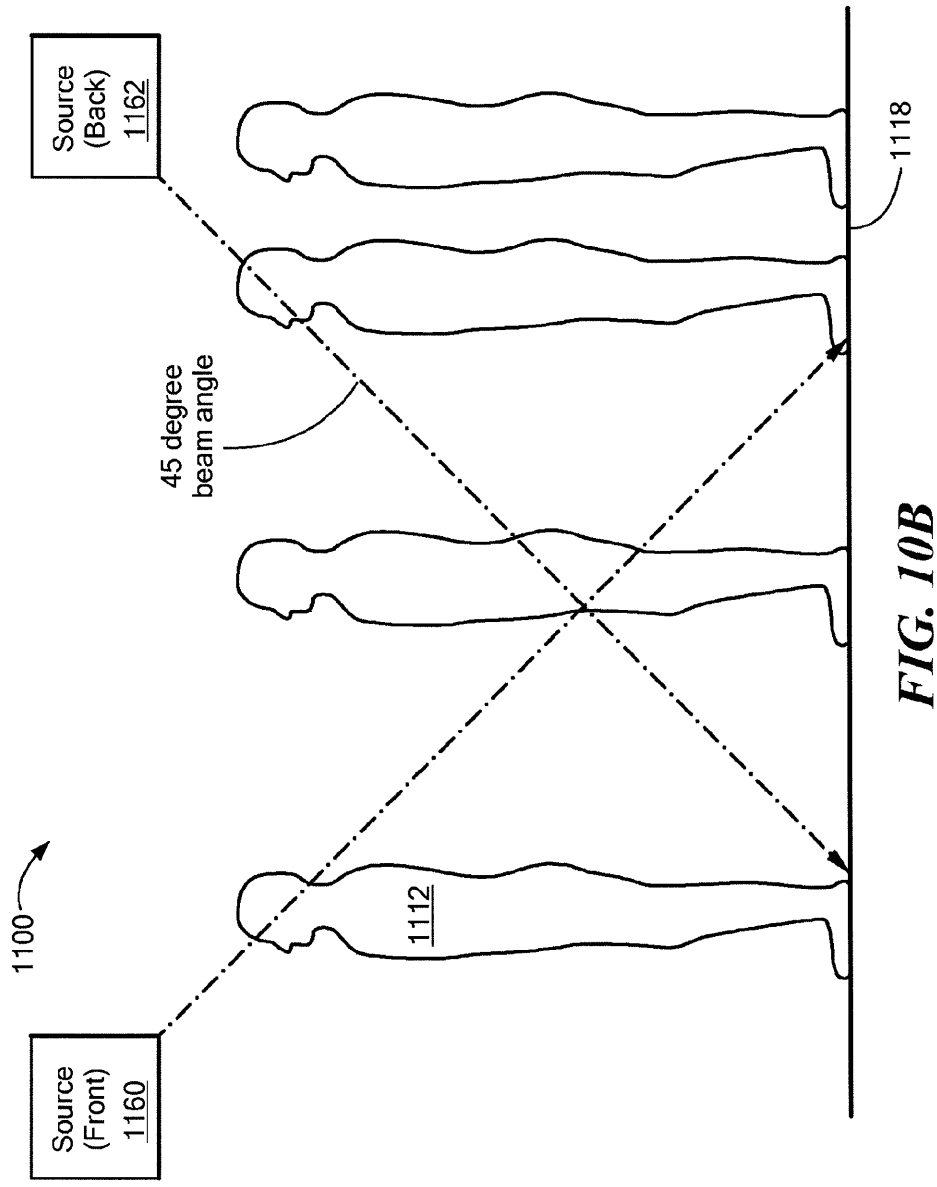
Source (Back) 1162
45 degree beam angle
1118
1100
1112
Source (Front) 1160

FIG. 10B

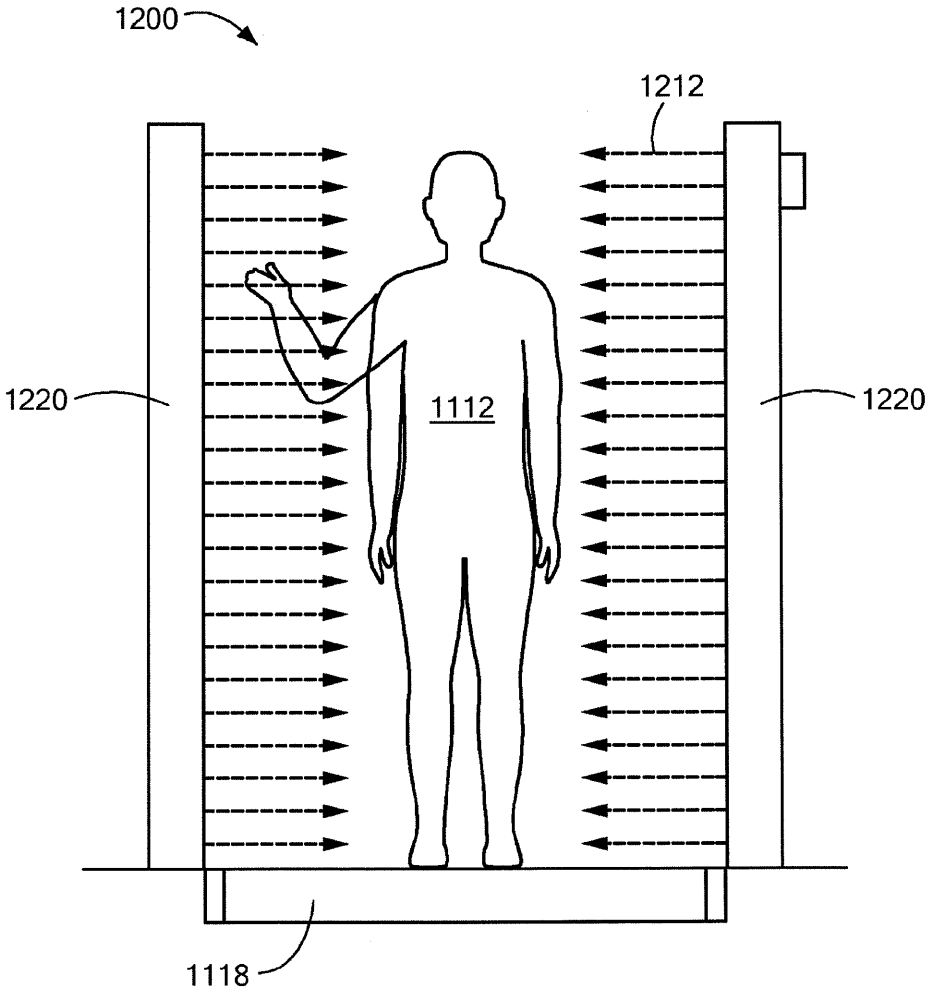

FIG. 11A

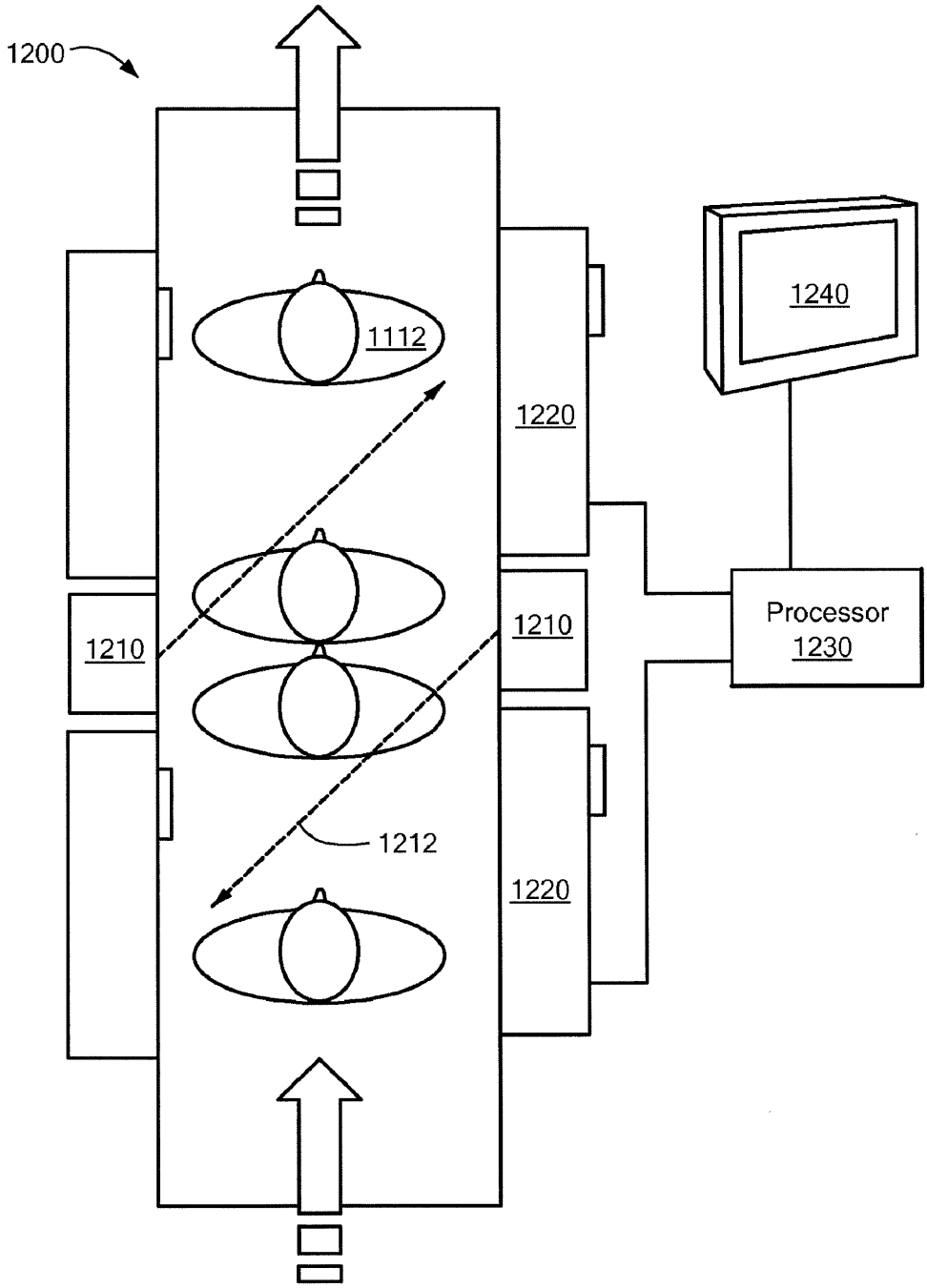

FIG. 11B

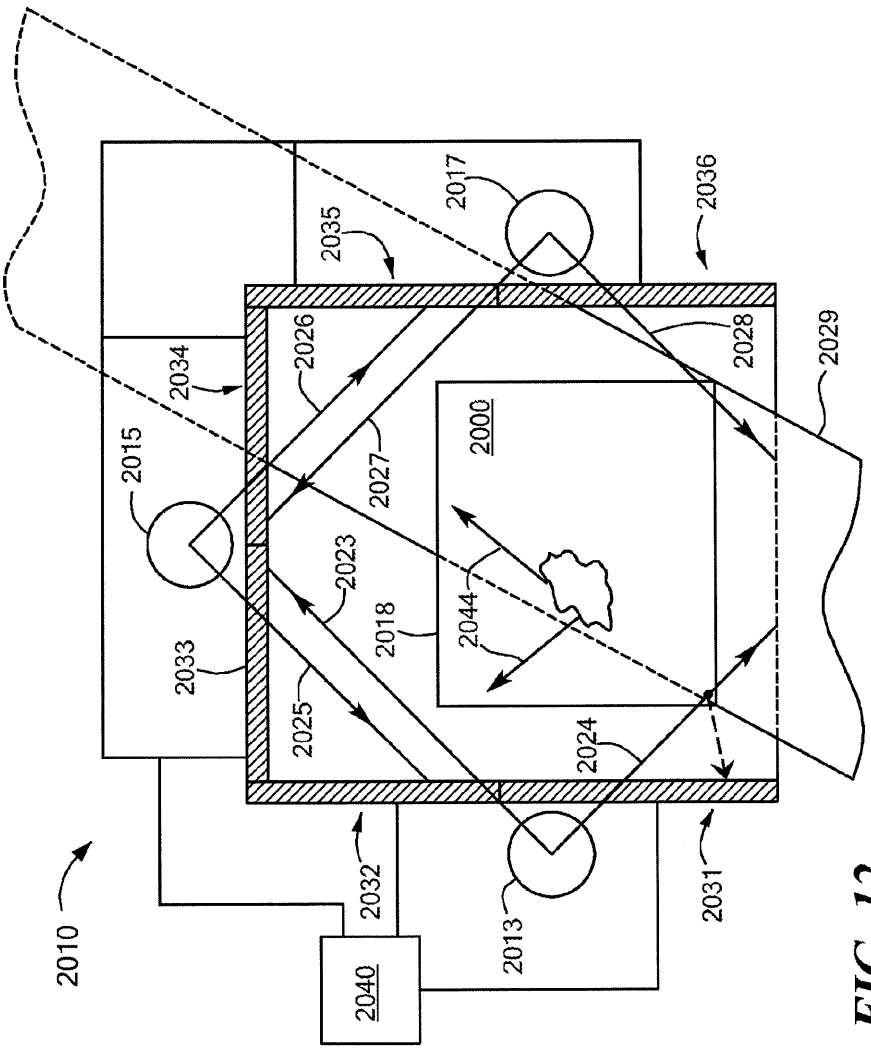
2010
2040
2032
2013
2031
2033
2015
2034
2026
2035
2017
2036
2028
2029
2027
2000
2023
2018
2044
2025
2024

FIG. 12

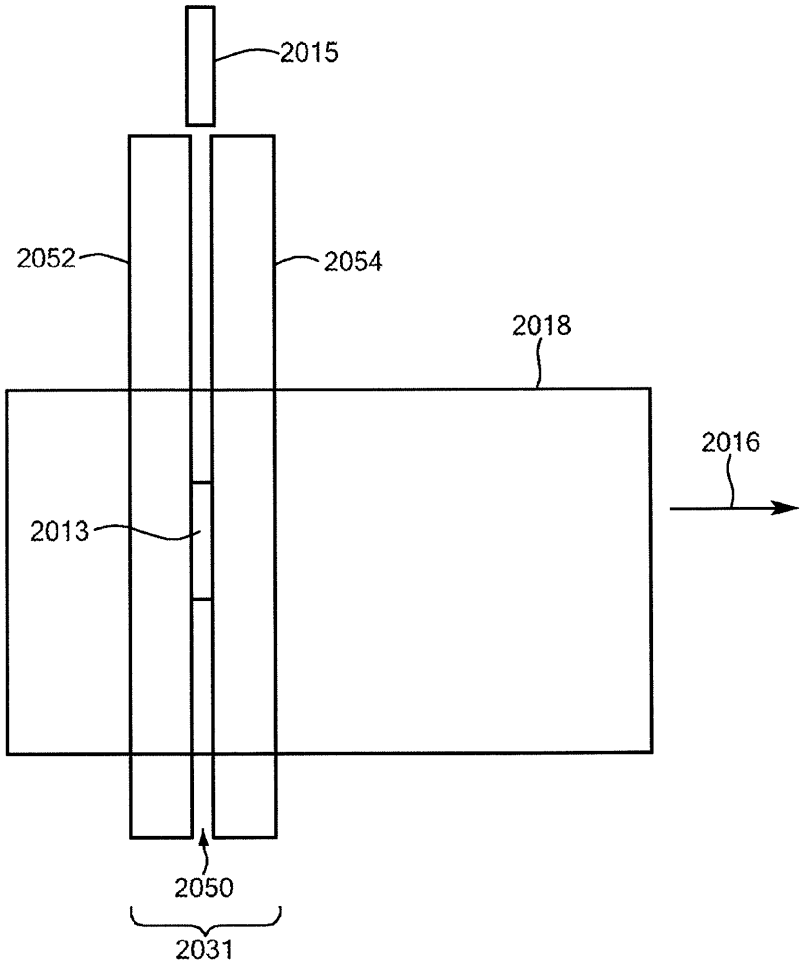

FIG. 13

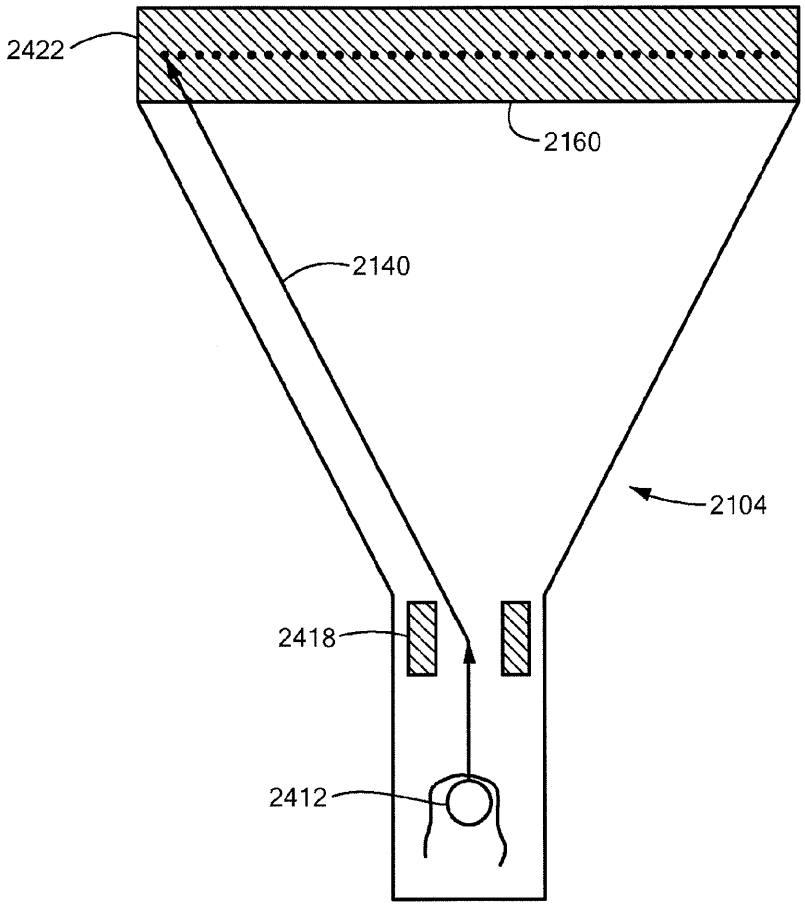

FIG. 14

PRIOR ART