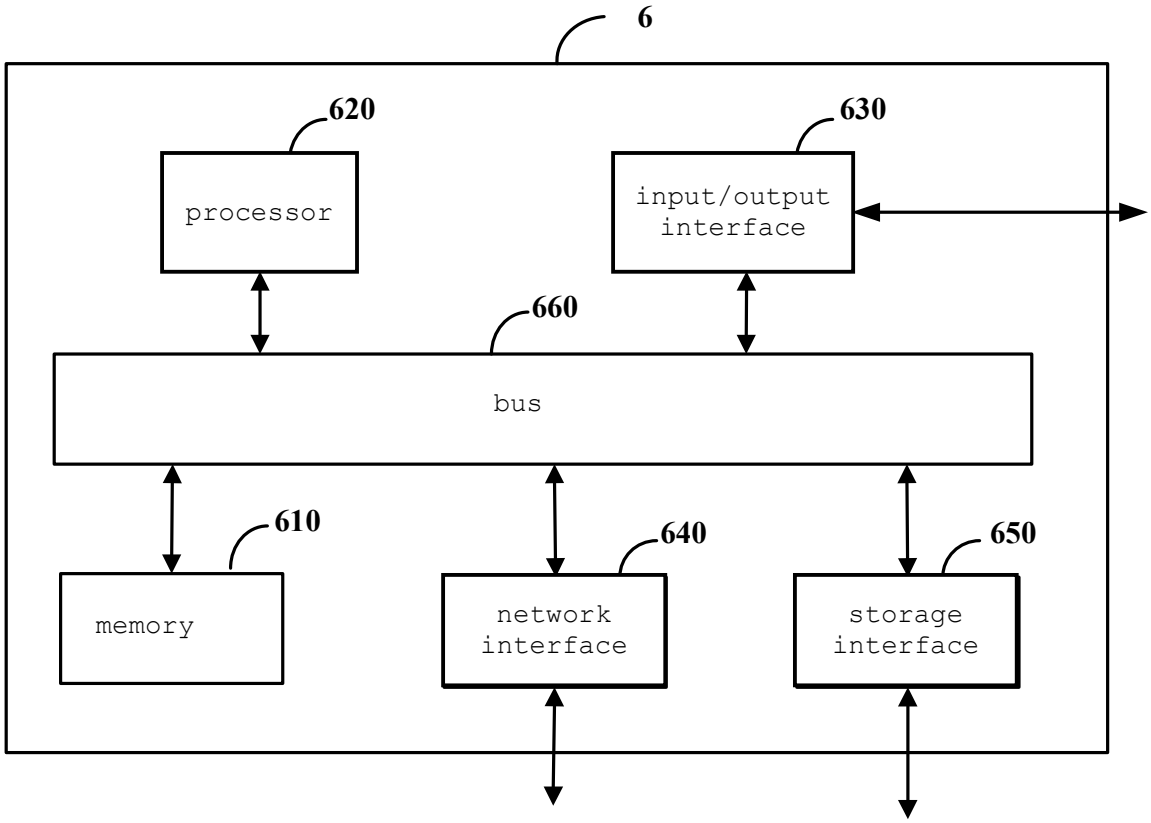
6
620
processor
630
input/output
interface
660
bus
610
memory
640
network
interface
650
storage
interface

Fig.6