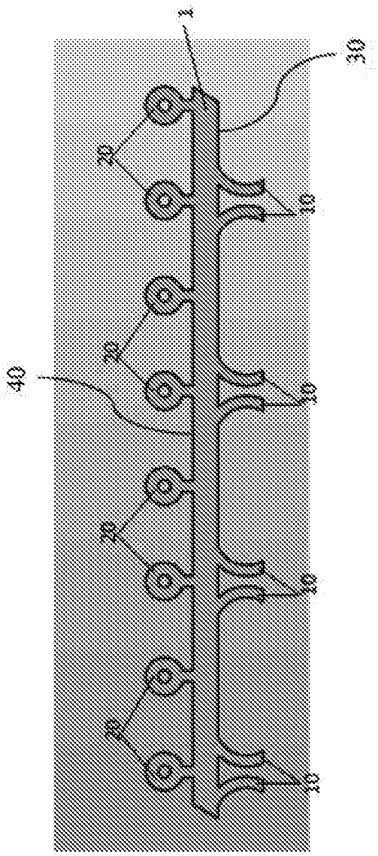

Fig. 1

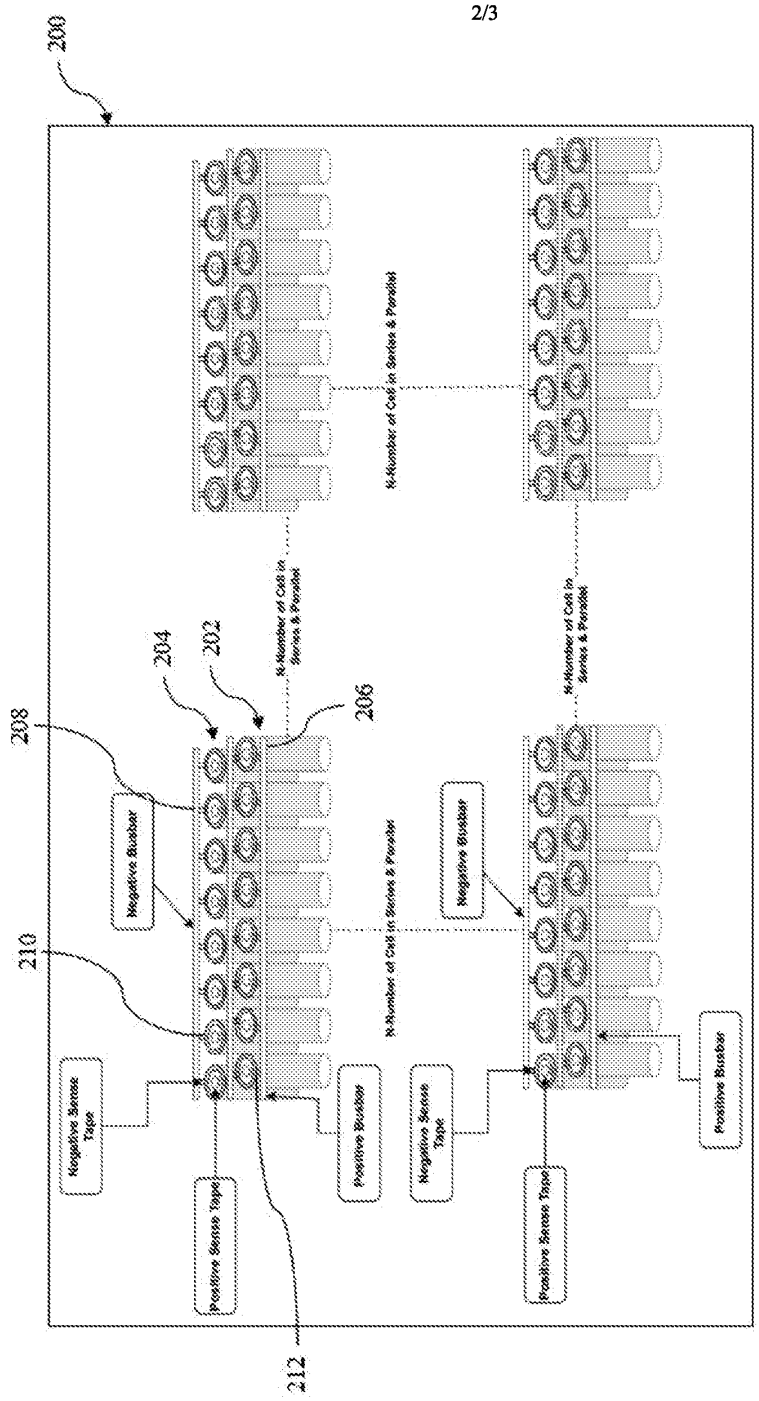
200
N-Number of Cell in Series & Parallel
N-Number of Cell in Series & Parallel
N-Number of Cell in Series & Parallel
N-Number of Cell in Series & Parallel
204
202
206
208
210
212
Negative Busbar
Negative Busbar
Positive Busbar
Positive Busbar
Negative Sense Tape
Negative Sense Tape
Positive Sense Tape
Positive Sense Tape

Fig. 2

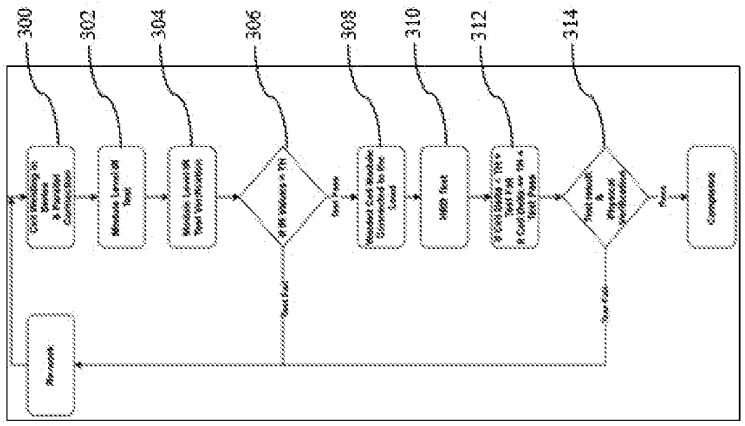

Fig. 3