FIG.1

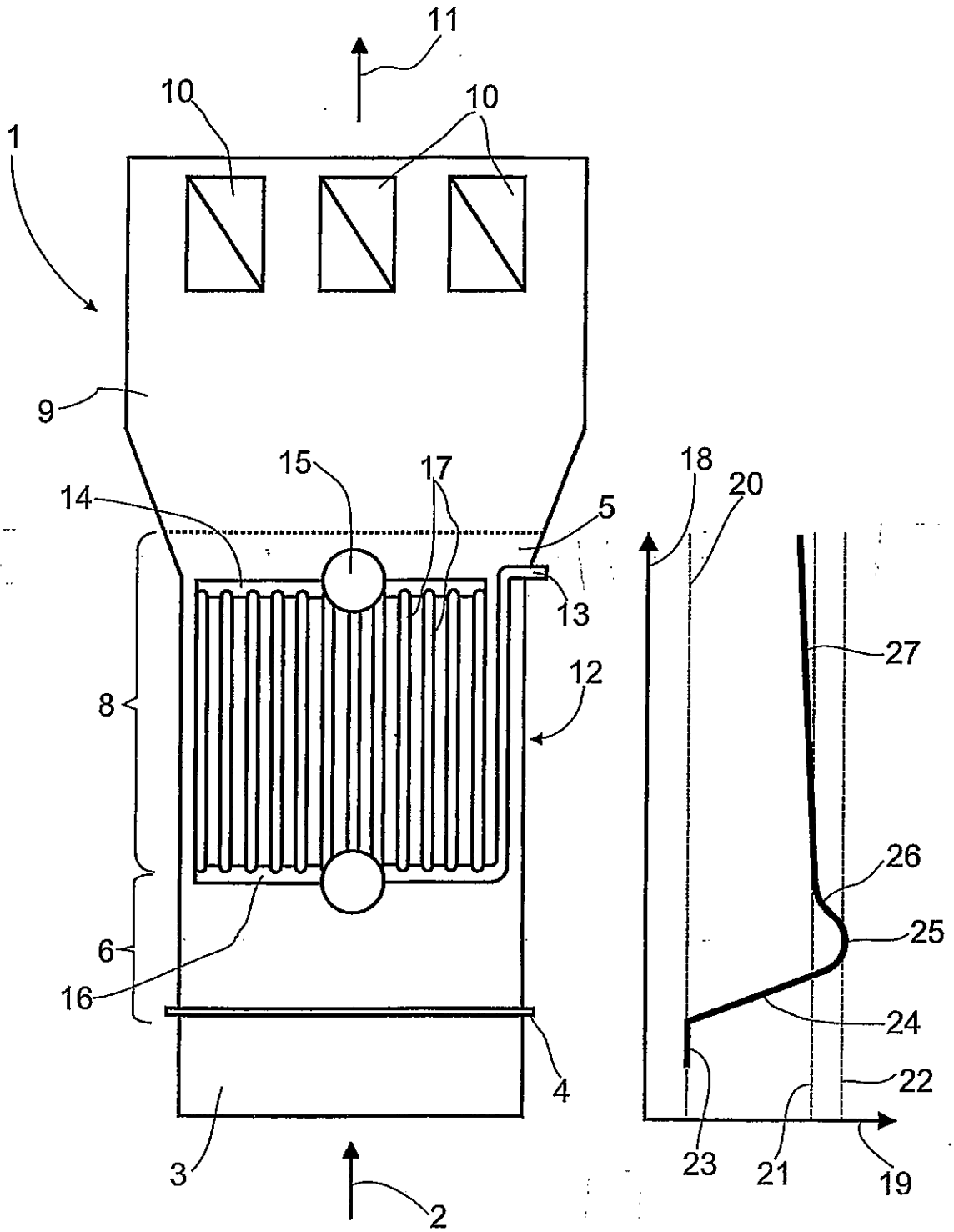

FIG.2

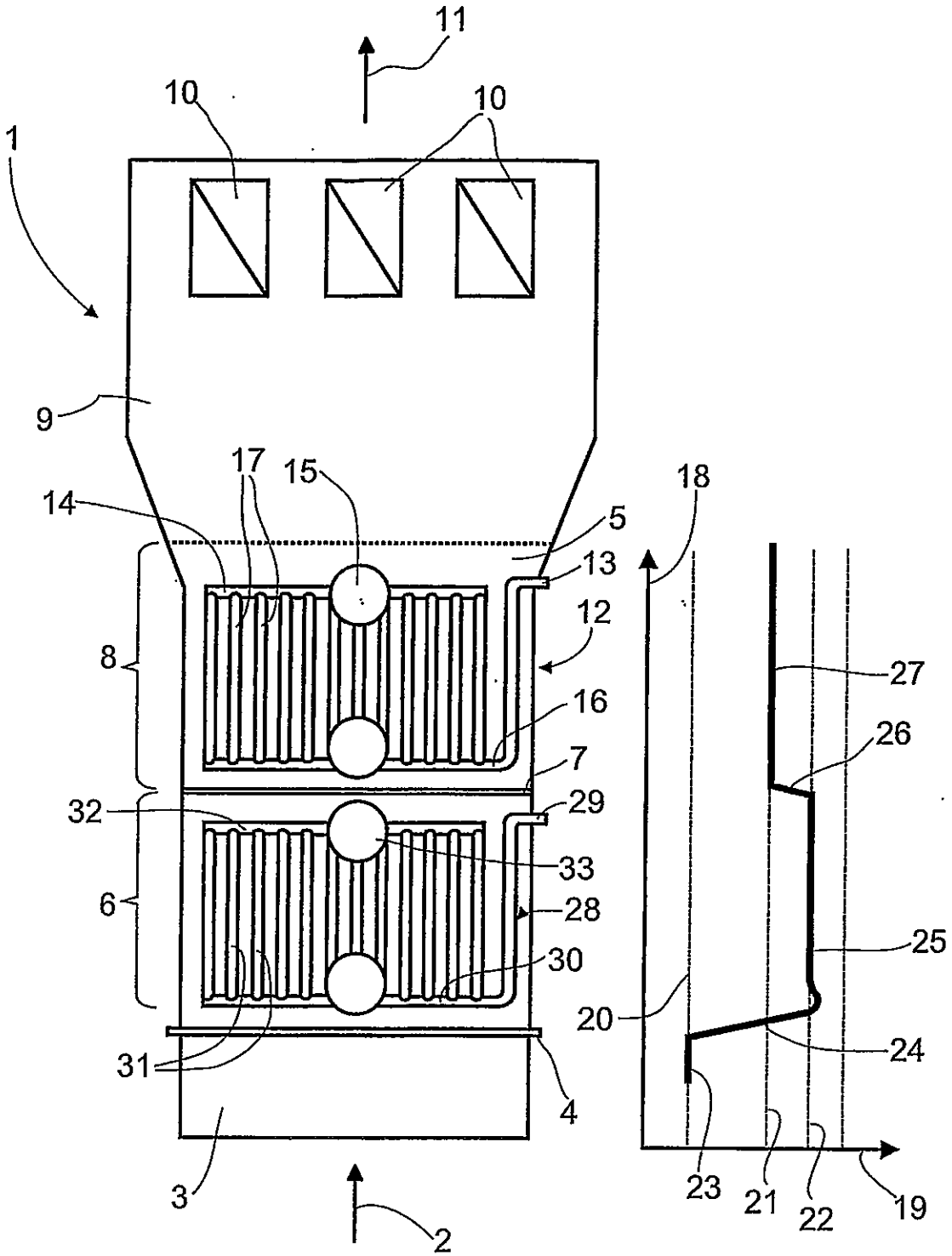
11
10
10
1
9
17
15
14
18
5
13
12
8
16
27
26
7
32
29
33
6
28
25
30
20
24
31
4
3
23
21
22
19
2

FIG.3

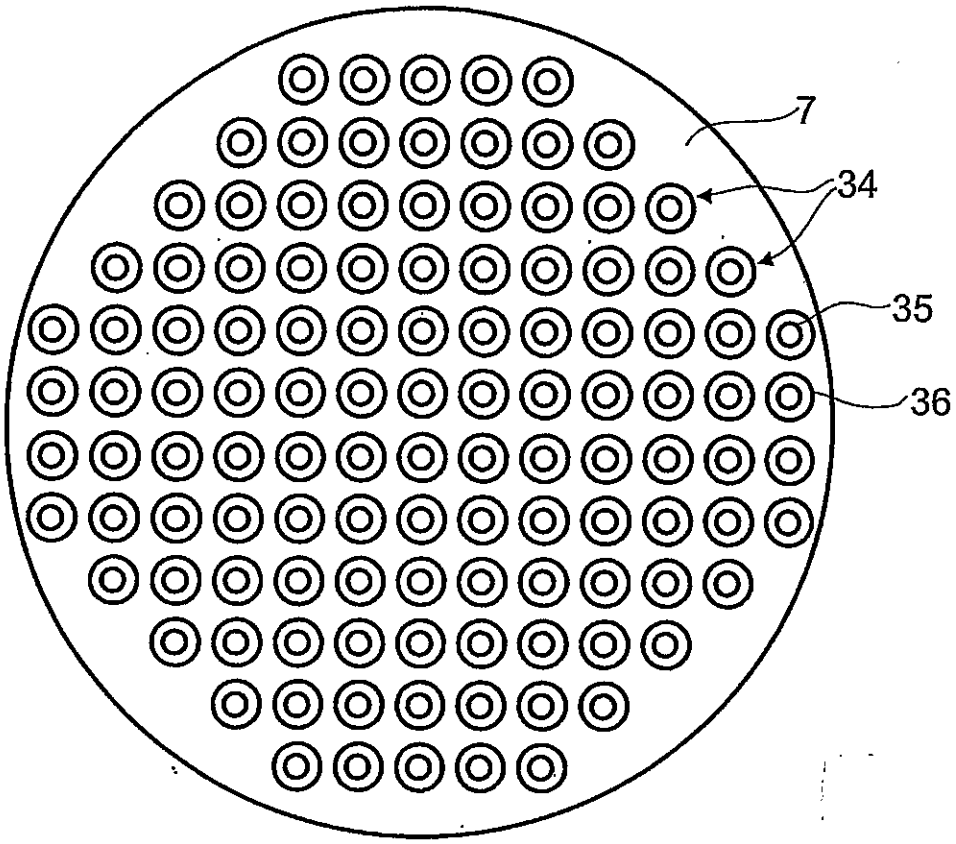

FIG.4

