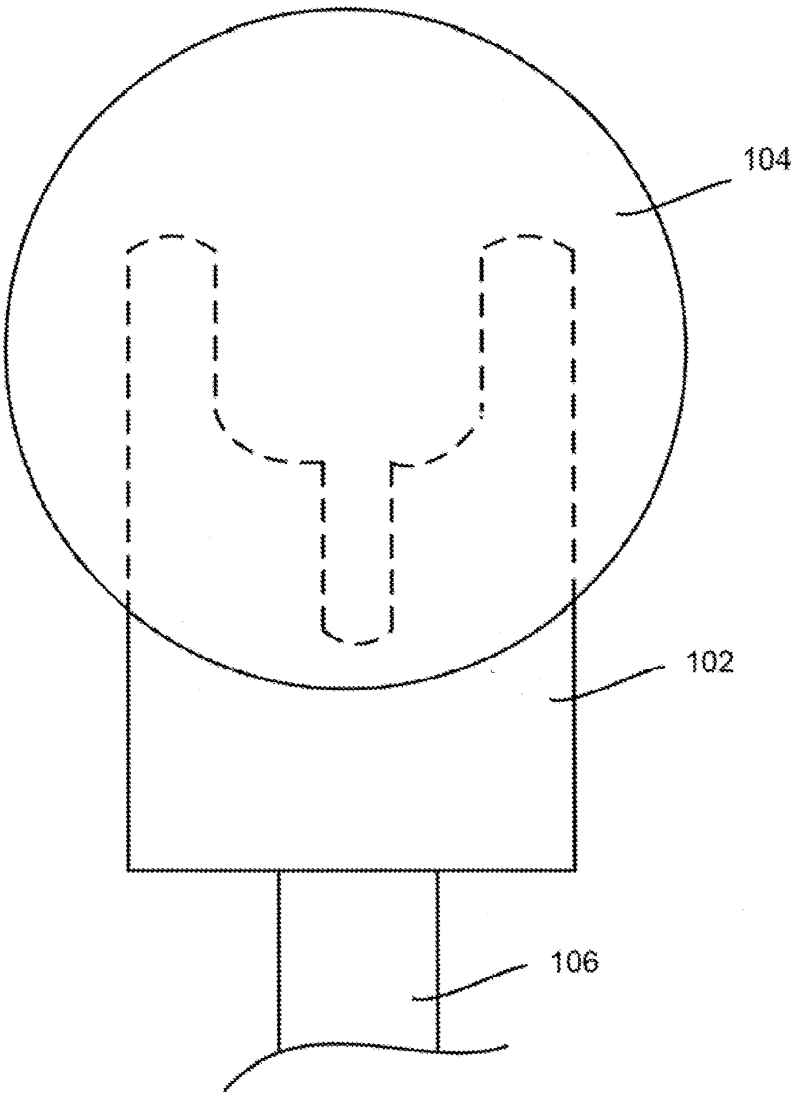

FIG. 1
(PRIOR ART)

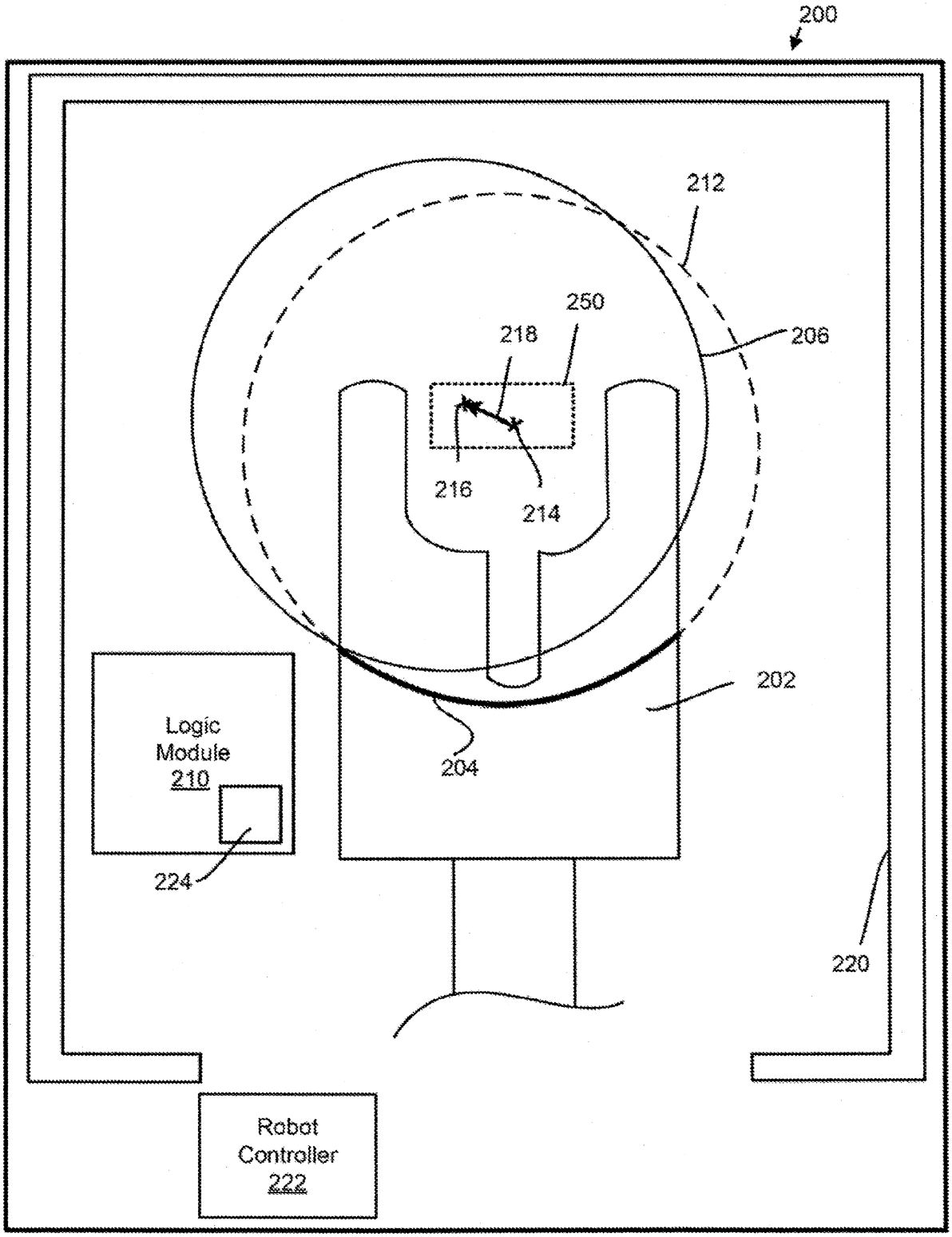
200
212
250
218
206
216
214
202
204
Logic
Module
210
224
220
Robot
Controller
222

FIG. 2

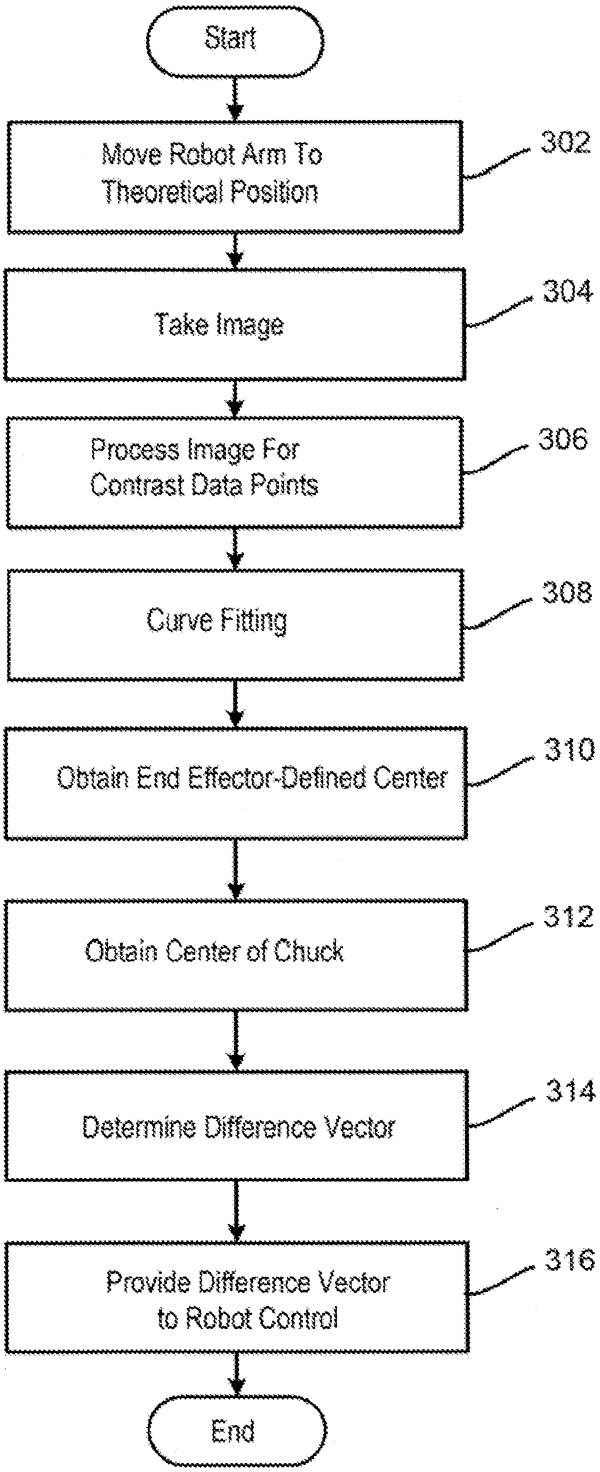
Start
Move Robot Arm To Theoretical Position
302
Take Image
304
Process Image For Contrast Data Points
306
Curve Fitting
308
Obtain End Effector-Defined Center
310
Obtain Center of Chuck
312
Determine Difference Vector
314
Provide Difference Vector to Robot Control
316
End

FIG. 3