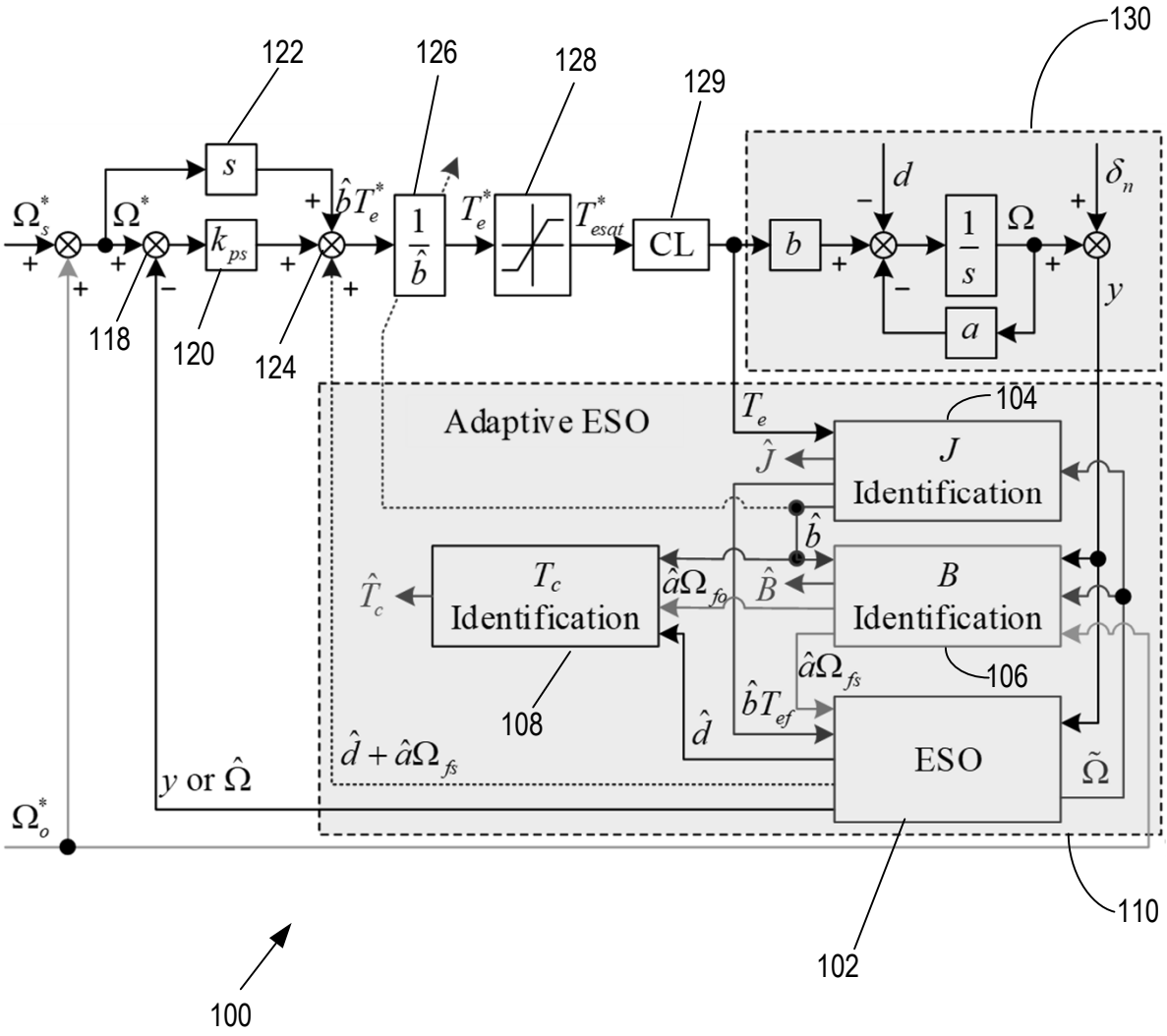
130
122
126
128
129
Ω_s^*
Ω^*
s
k_{ps}
$\hat{b}T_e^*$
$\frac{1}{\hat{b}}$
T_e^*
T_{esat}^*
CL
b
d
$\frac{1}{s}$
Ω
δ_n
y
a
118
120
124
Adaptive ESO
T_e
104
$\hat{J}$
J Identification
$\hat{b}$
$\hat{T}_c$
T_c Identification
$\hat{a}\Omega_{fo}$
$\hat{B}$
B Identification
106
$\hat{a}\Omega_{fs}$
$\hat{b}T_{ef}$
108
$\hat{d}$
$\hat{d}+\hat{a}\Omega_{fs}$
ESO
$\tilde{\Omega}$
y or $\hat{\Omega}$
Ω_o^*
110
102
100

Figure 1

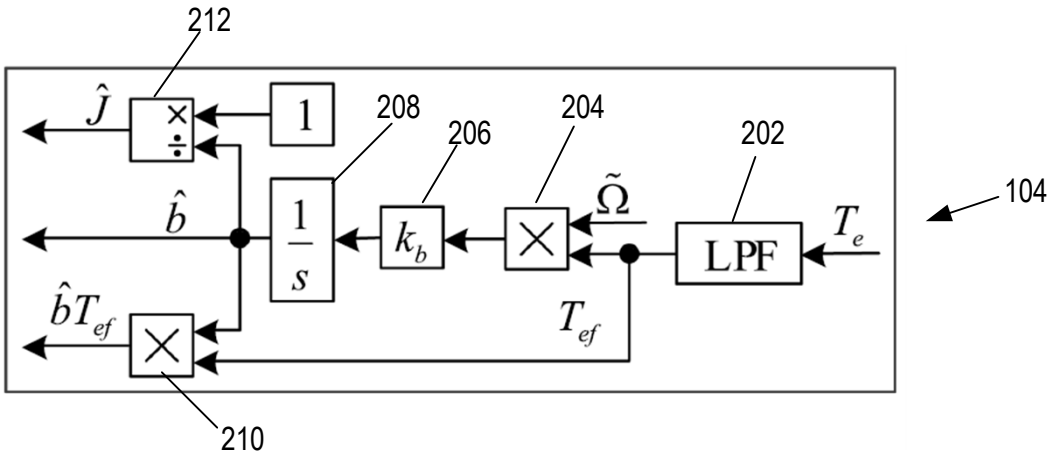

Figure 2(a)

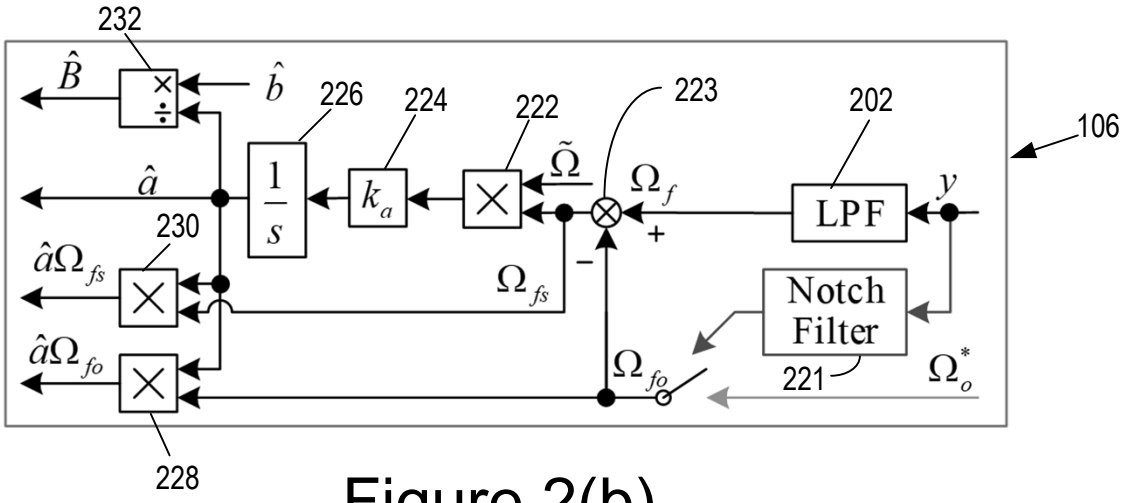

Figure 2(b)

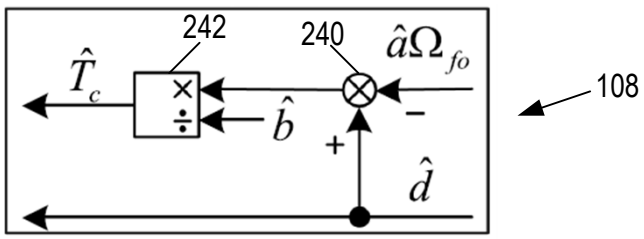

Figure 2(c)

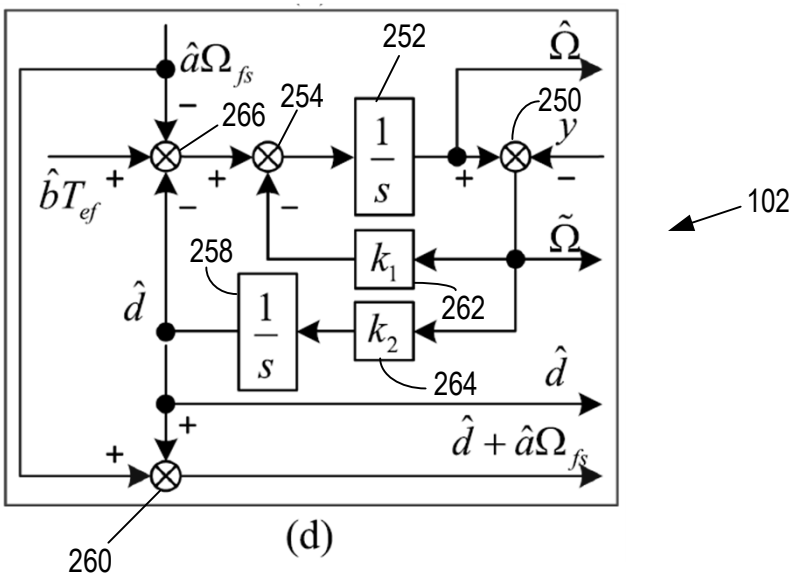

Figure 2(d)

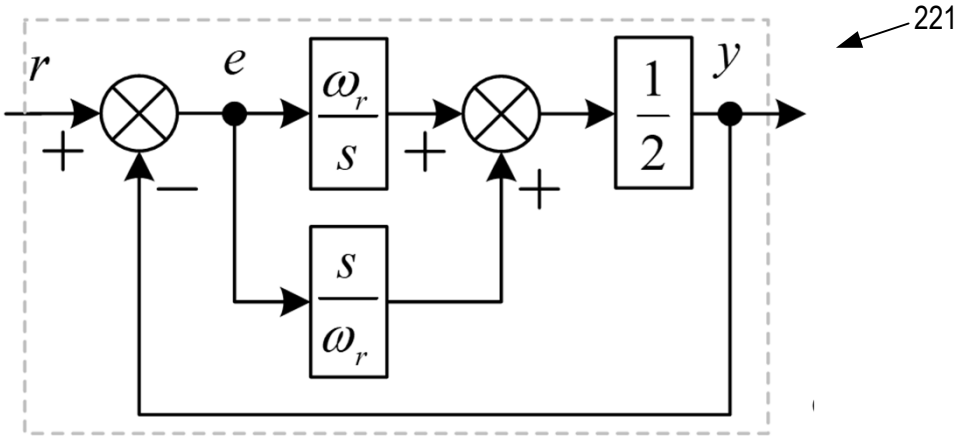

Figure 2(e)

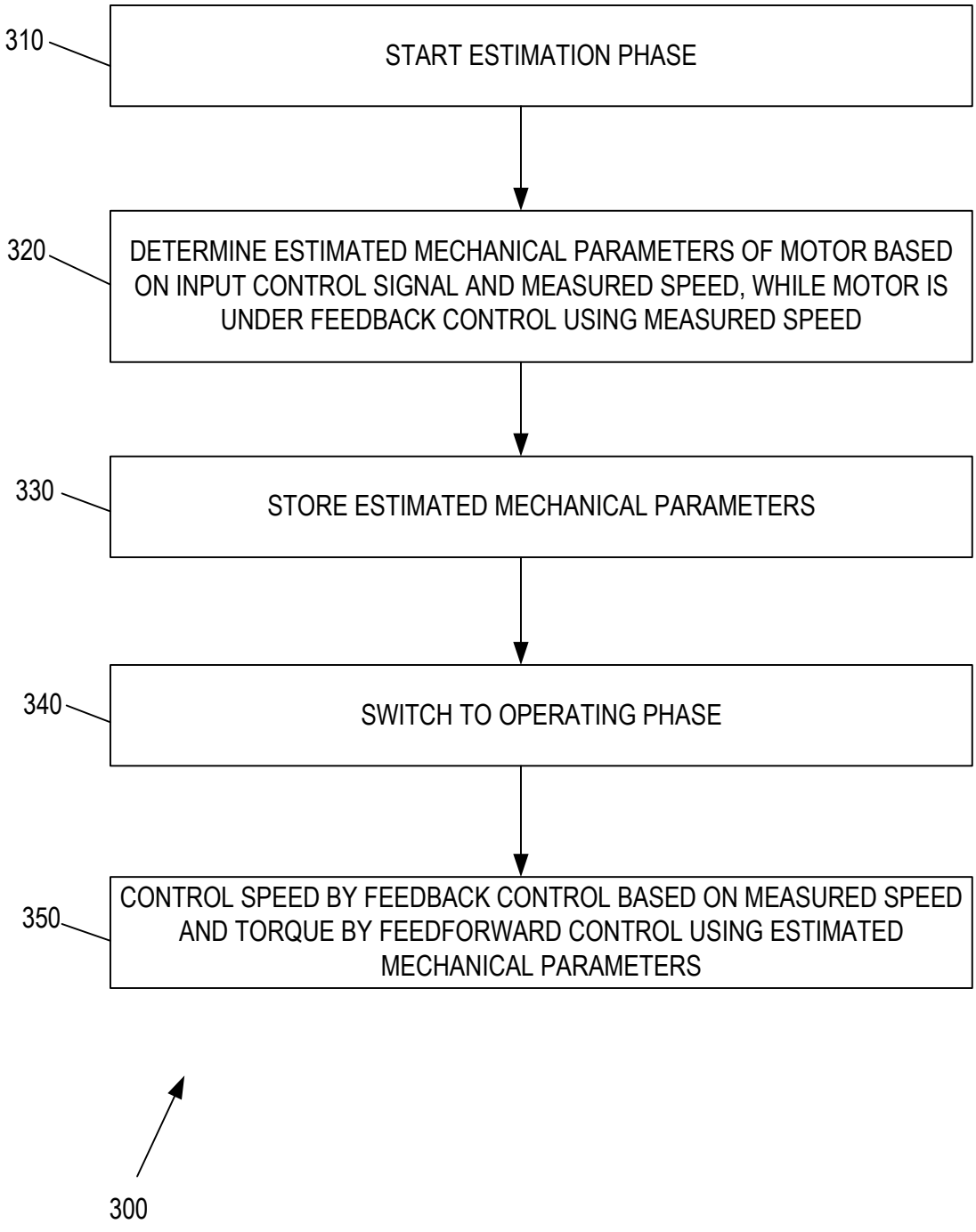
310
START ESTIMATION PHASE
320
DETERMINE ESTIMATED MECHANICAL PARAMETERS OF MOTOR BASED ON INPUT CONTROL SIGNAL AND MEASURED SPEED, WHILE MOTOR IS UNDER FEEDBACK CONTROL USING MEASURED SPEED
330
STORE ESTIMATED MECHANICAL PARAMETERS
340
SWITCH TO OPERATING PHASE
350
CONTROL SPEED BY FEEDBACK CONTROL BASED ON MEASURED SPEED AND TORQUE BY FEEDFORWARD CONTROL USING ESTIMATED MECHANICAL PARAMETERS
300

Figure 3

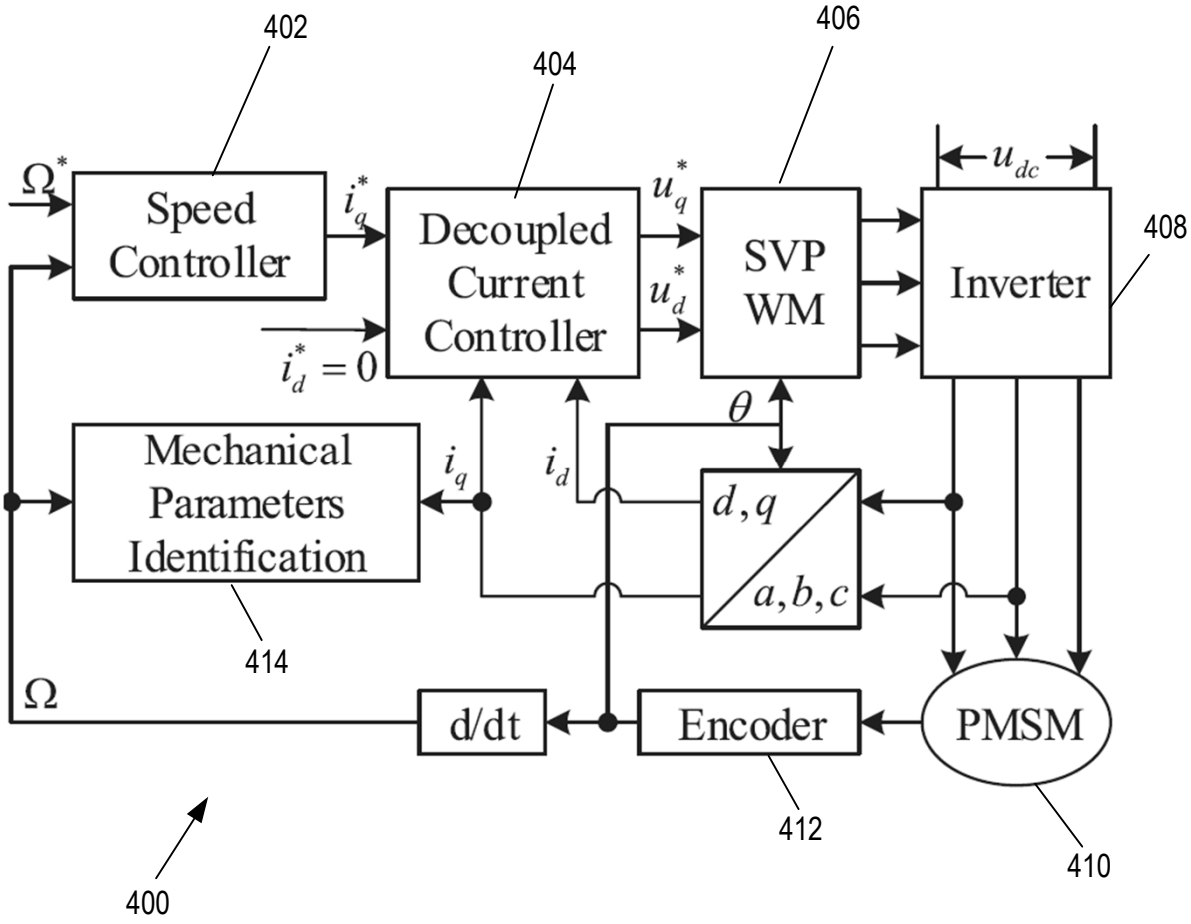
402
404
406
408
410
412
414
400
Ω^*
Speed Controller
i_q^*
Decoupled Current Controller
u_q^*
u_d^*
SVP WM
u_{dc}
Inverter
$i_d^* = 0$
θ
Mechanical Parameters Identification
i_q
i_d
d,q
a,b,c
Ω
d/dt
Encoder
PMSM

Figure 4

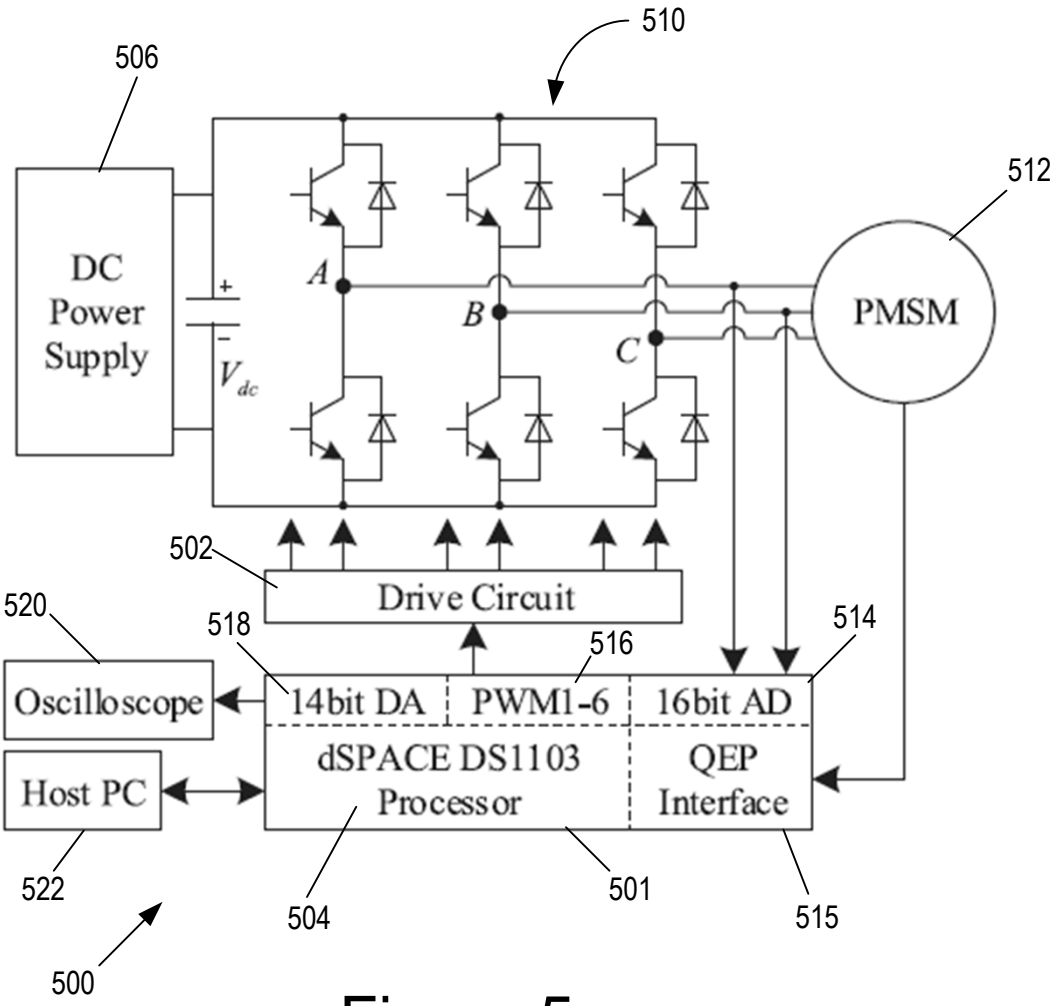
510
506
512
DC
Power
Supply
+
−
V_{dc}
A
B
C
PMSM
502
Drive Circuit
520
518
516
514
Oscilloscope
14bit DA
PWM1-6
16bit AD
dSPACE DS1103
Processor
QEP
Interface
Host PC
522
504
501
515
500

Figure 5

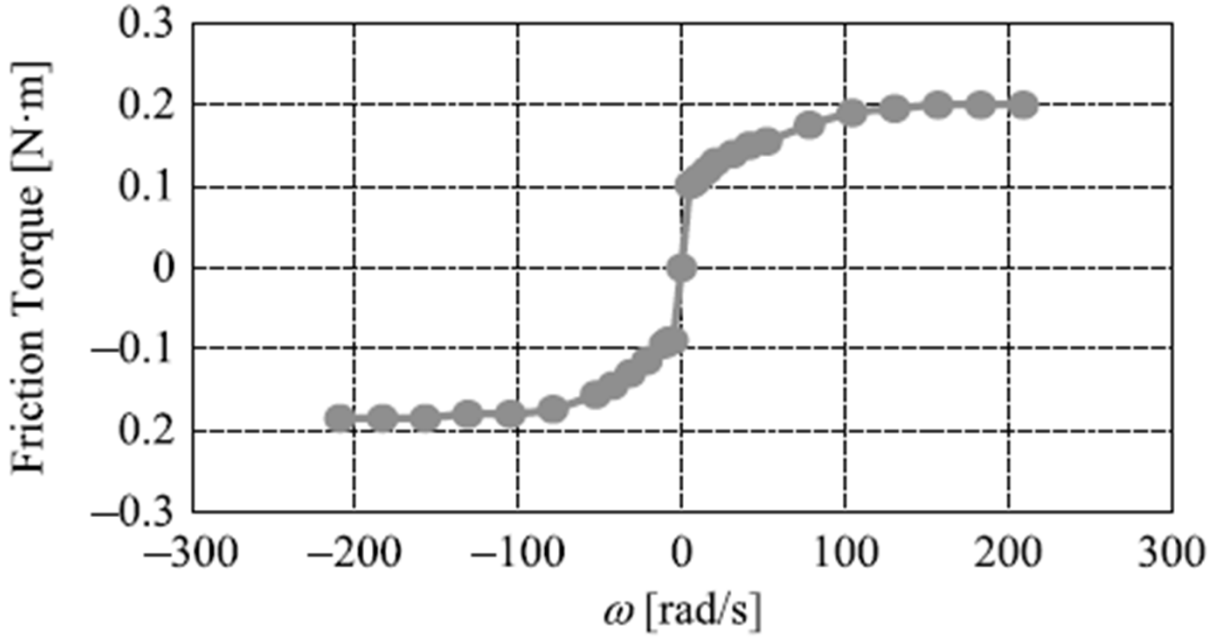

Figure 6

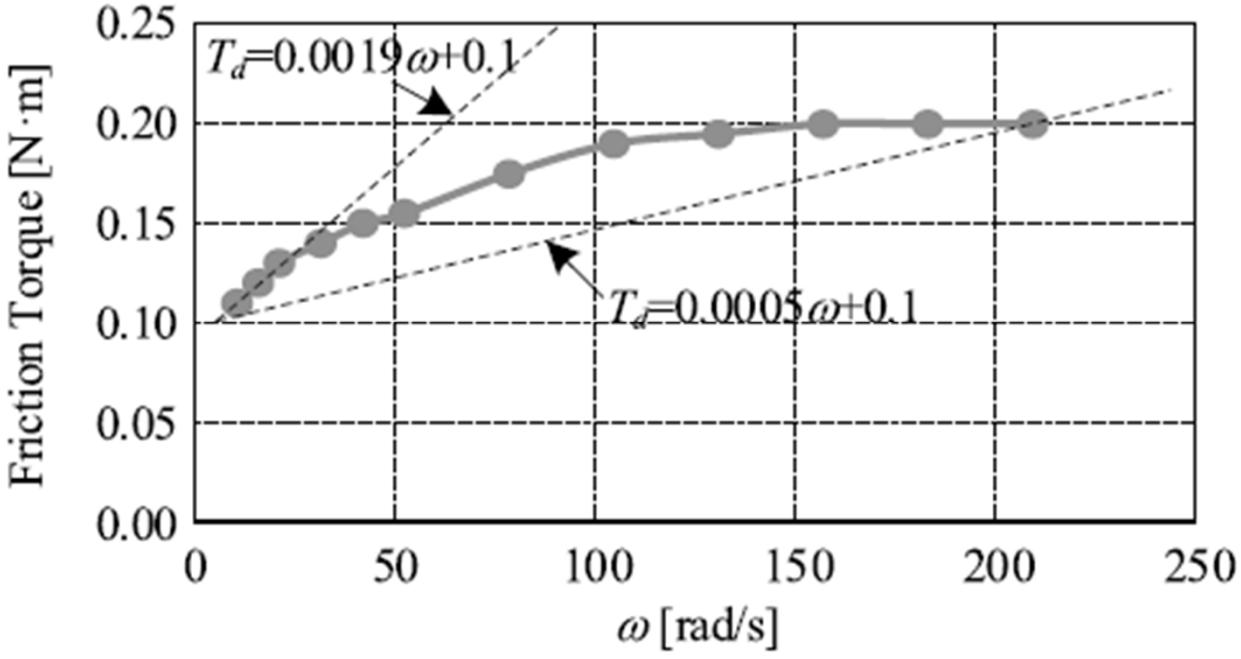

Figure 7

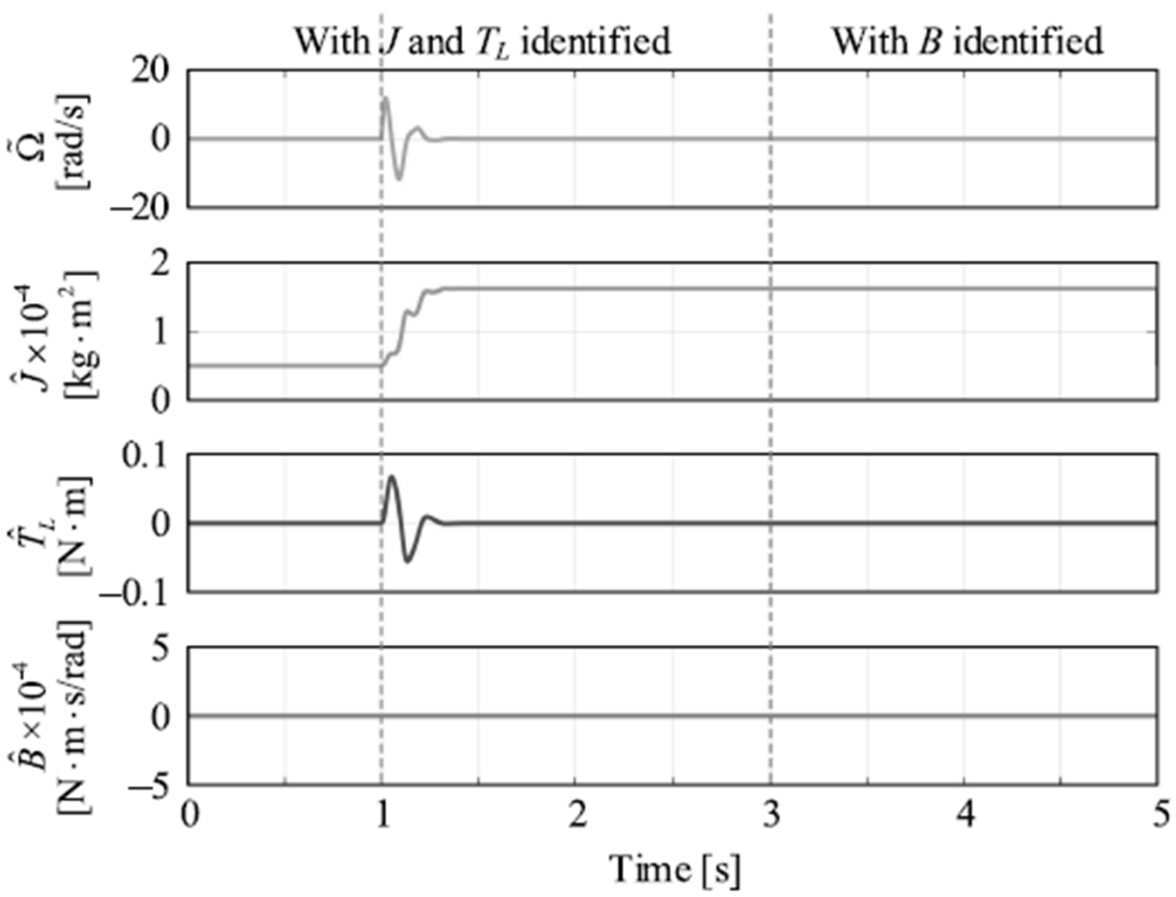
With J and T_L identified
With B identified
$\tilde{\Omega}$ [rad/s]
20
0
–20
$\hat{J}\times10^{-4}$ [kg·m^2]
2
1
0
$\hat{T}_L$ [N·m]
0.1
0
–0.1
$\hat{B}\times10^{-4}$ [N·m·s/rad]
5
0
–5
0
1
2
3
4
5
Time [s]

Figure 8(a)

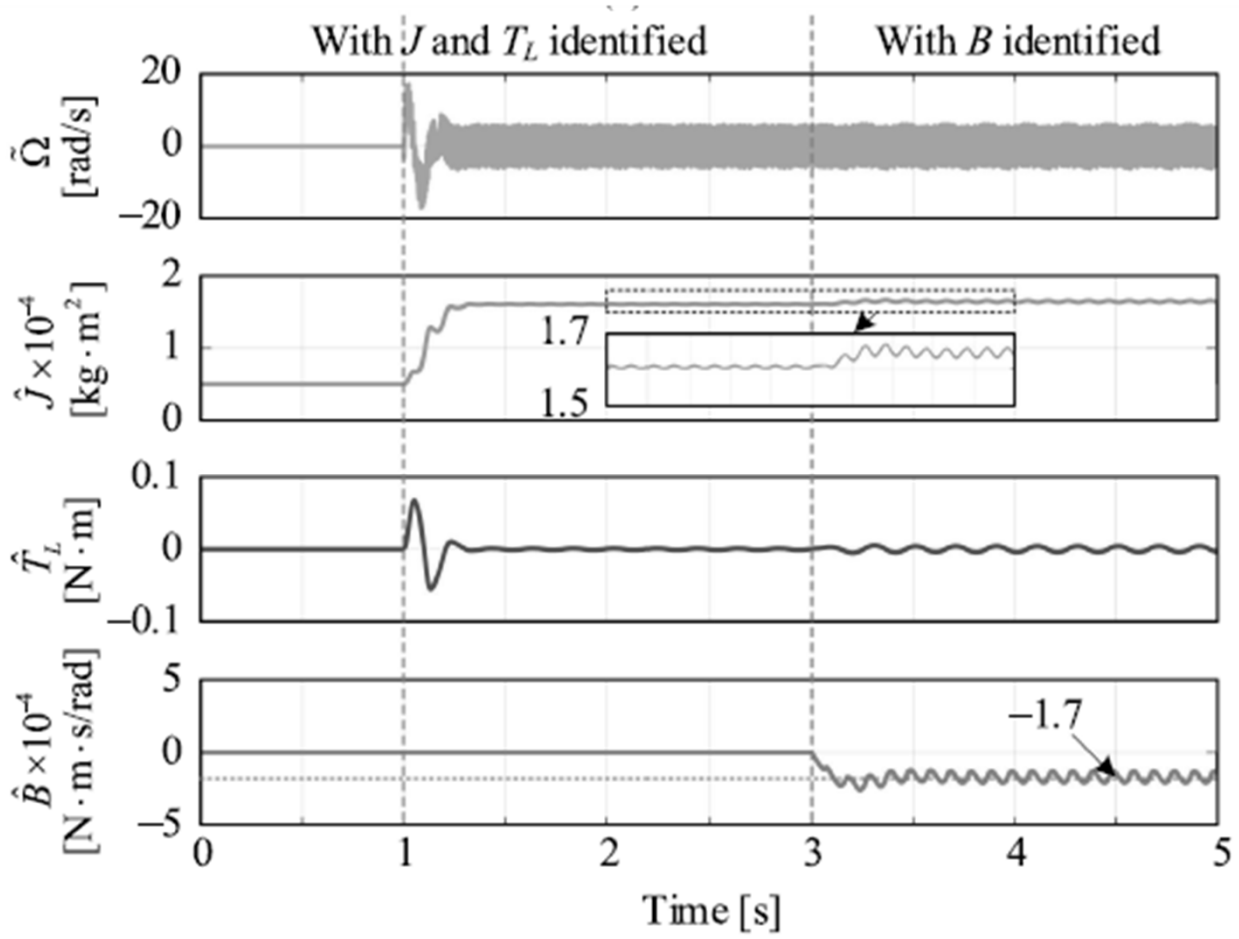
With J and T_L identified
With B identified
$\tilde{\Omega}$ [rad/s]
20
0
–20
$\hat{J}\times10^{-4}$ [kg·m^2]
2
1
0
1.7
1.5
$\hat{T}_L$ [N·m]
0.1
0
–0.1
$\hat{B}\times10^{-4}$ [N·m·s/rad]
5
0
–5
–1.7
0
1
2
3
4
5
Time [s]

Figure 8(b)

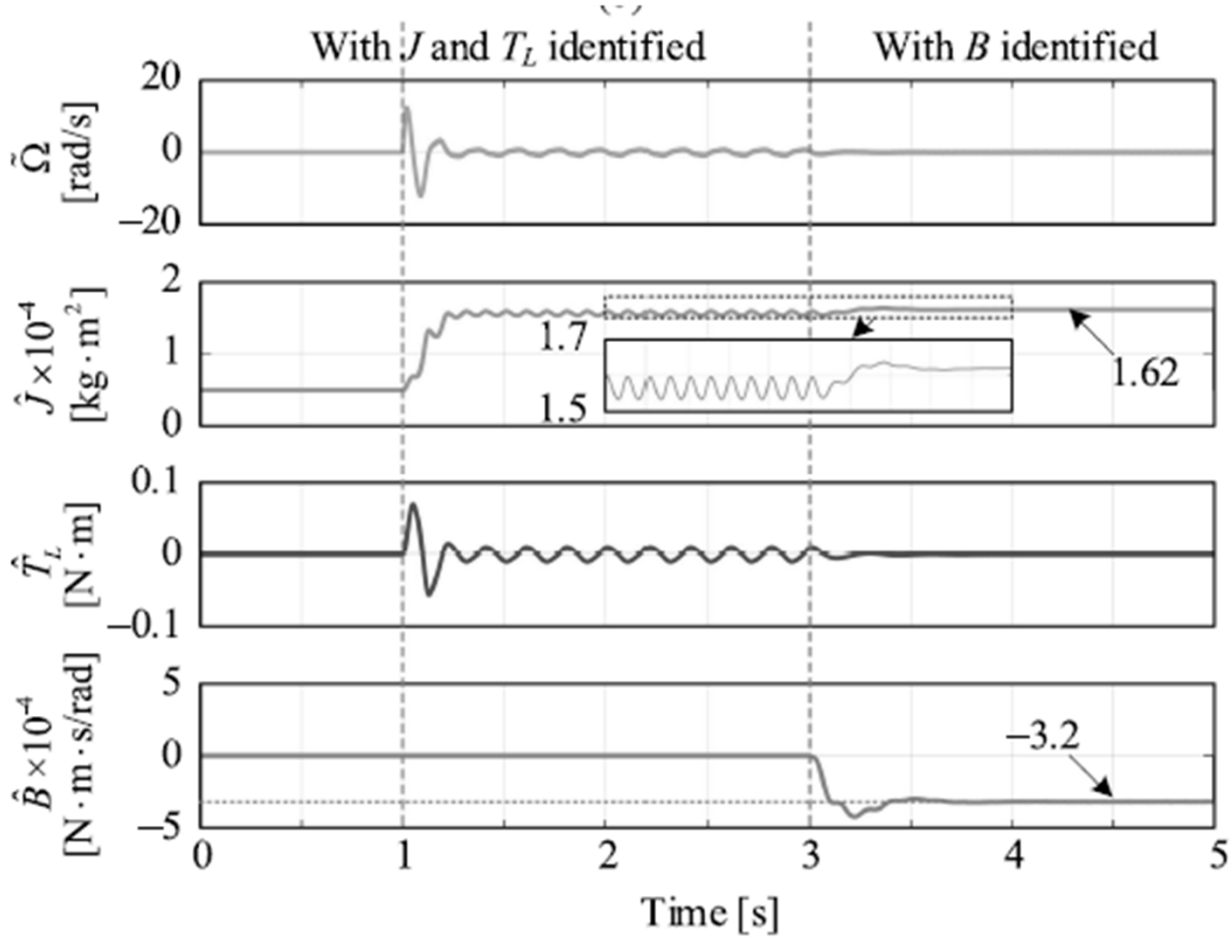
With J and T_L identified
With B identified
$\tilde{\Omega}$ [rad/s]
20
0
−20
$\hat{J}\times10^{-4}$ [kg·m^2]
2
1
0
1.7
1.5
1.62
$\hat{T}_L$ [N·m]
0.1
0
−0.1
$\hat{B}\times10^{-4}$ [N·m·s/rad]
5
0
−5
−3.2
0
1
2
3
4
5
Time [s]

Figure 8(c)

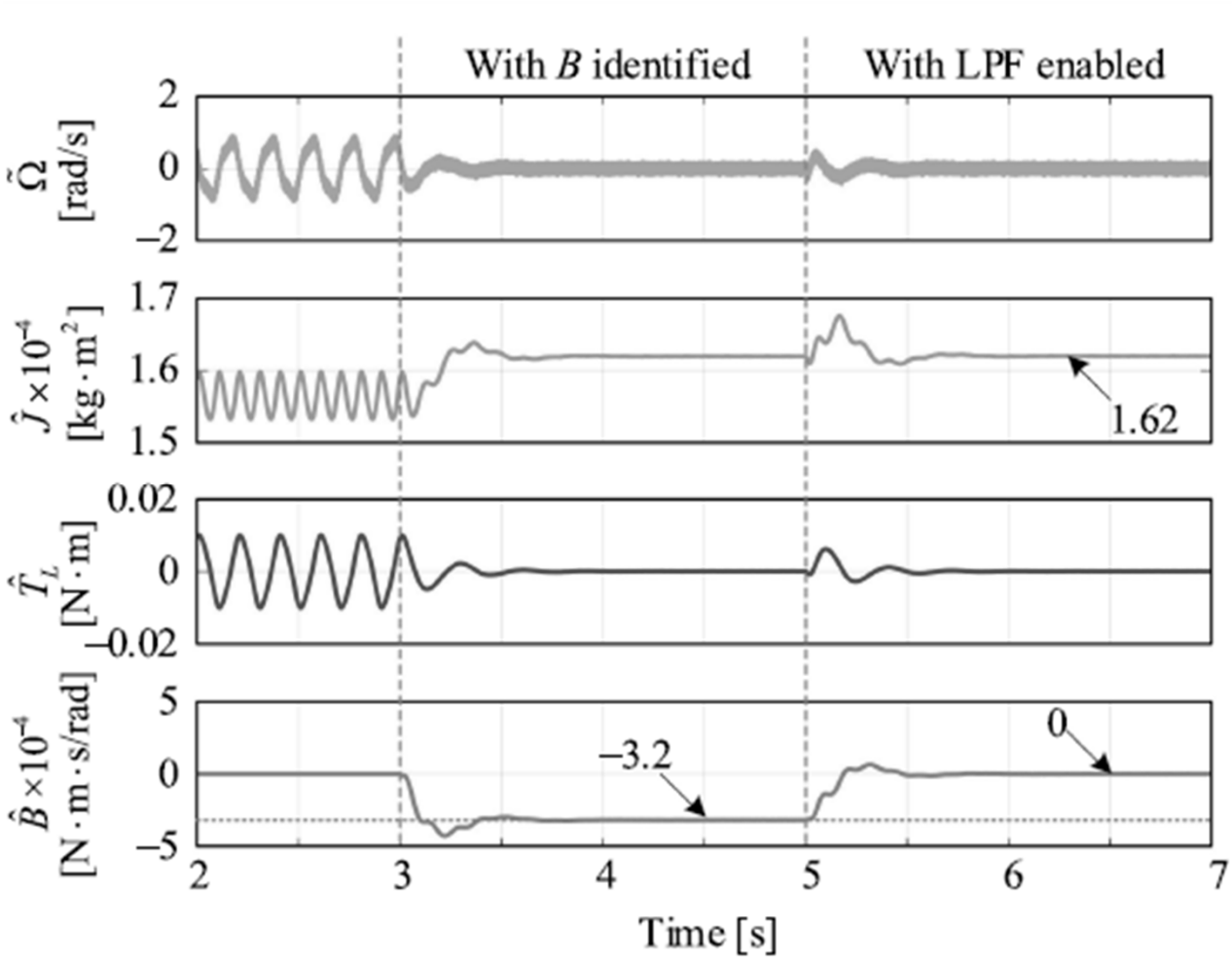
With B identified
With LPF enabled
2
0
−2
$\tilde{\Omega}$ [rad/s]
1.7
1.6
1.5
$\hat{J}\times10^{-4}$ [kg·m²]
1.62
0.02
0
−0.02
$\hat{T}_L$ [N·m]
5
0
−5
$\hat{B}\times10^{-4}$ [N·m·s/rad]
−3.2
0
2
3
4
5
6
7
Time [s]

Figure 9(a)

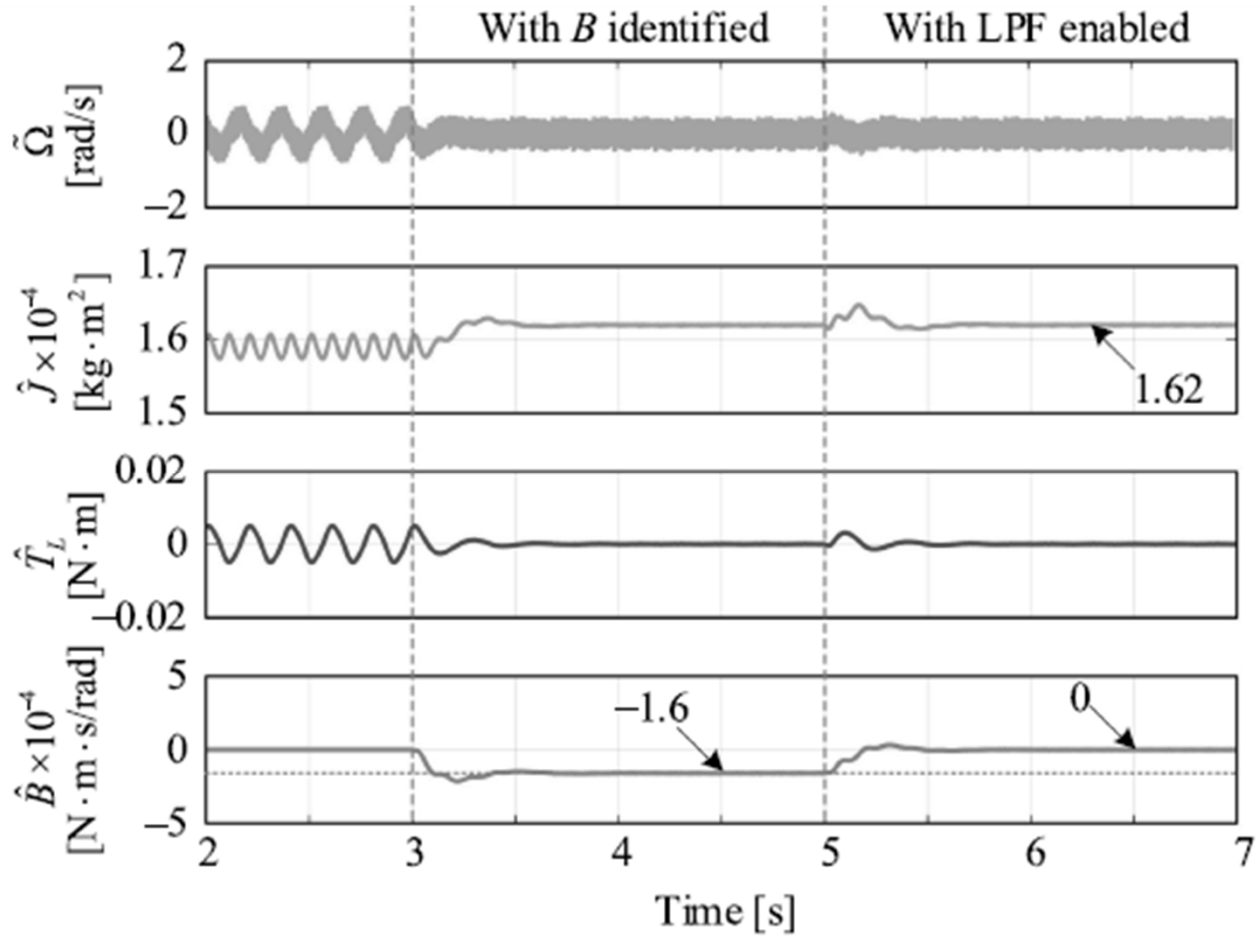
With B identified
With LPF enabled
$\tilde{\Omega}$ [rad/s]
2
0
−2
$\hat{J}\times10^{-4}$ [kg·m²]
1.7
1.6
1.5
1.62
$\hat{T}_L$ [N·m]
0.02
0
−0.02
$\hat{B}\times10^{-4}$ [N·m·s/rad]
5
0
−5
−1.6
0
2
3
4
5
6
7
Time [s]

Figure 9(b)

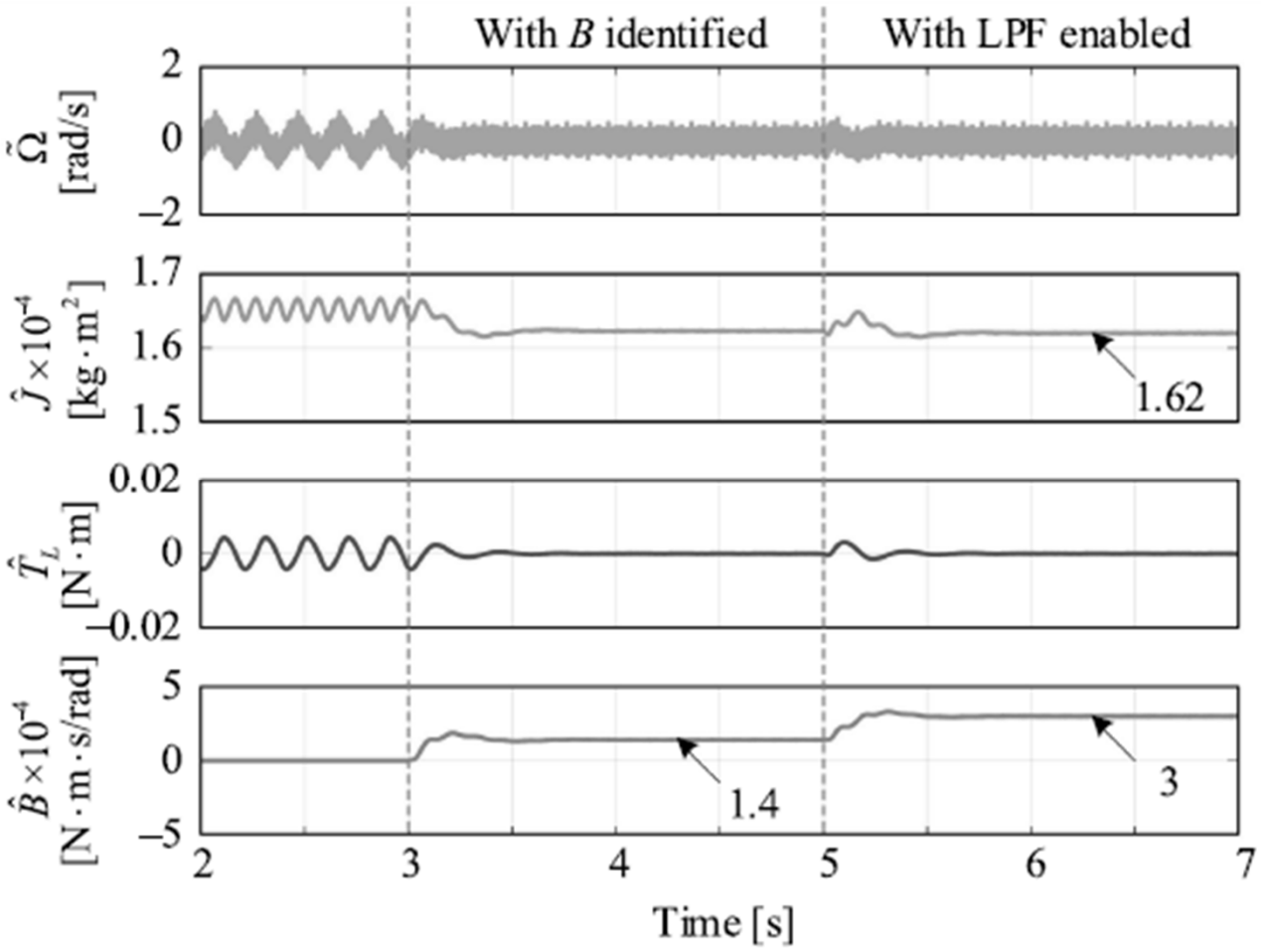
With B identified
With LPF enabled
$\tilde{\Omega}$ [rad/s]
2
0
−2
$\hat{J}\times10^{-4}$ [kg·m^2]
1.7
1.6
1.5
1.62
$\hat{T}_L$ [N·m]
0.02
0
−0.02
$\hat{B}\times10^{-4}$ [N·m·s/rad]
5
0
−5
1.4
3
2
3
4
5
6
7
Time [s]

Figure 9(c)

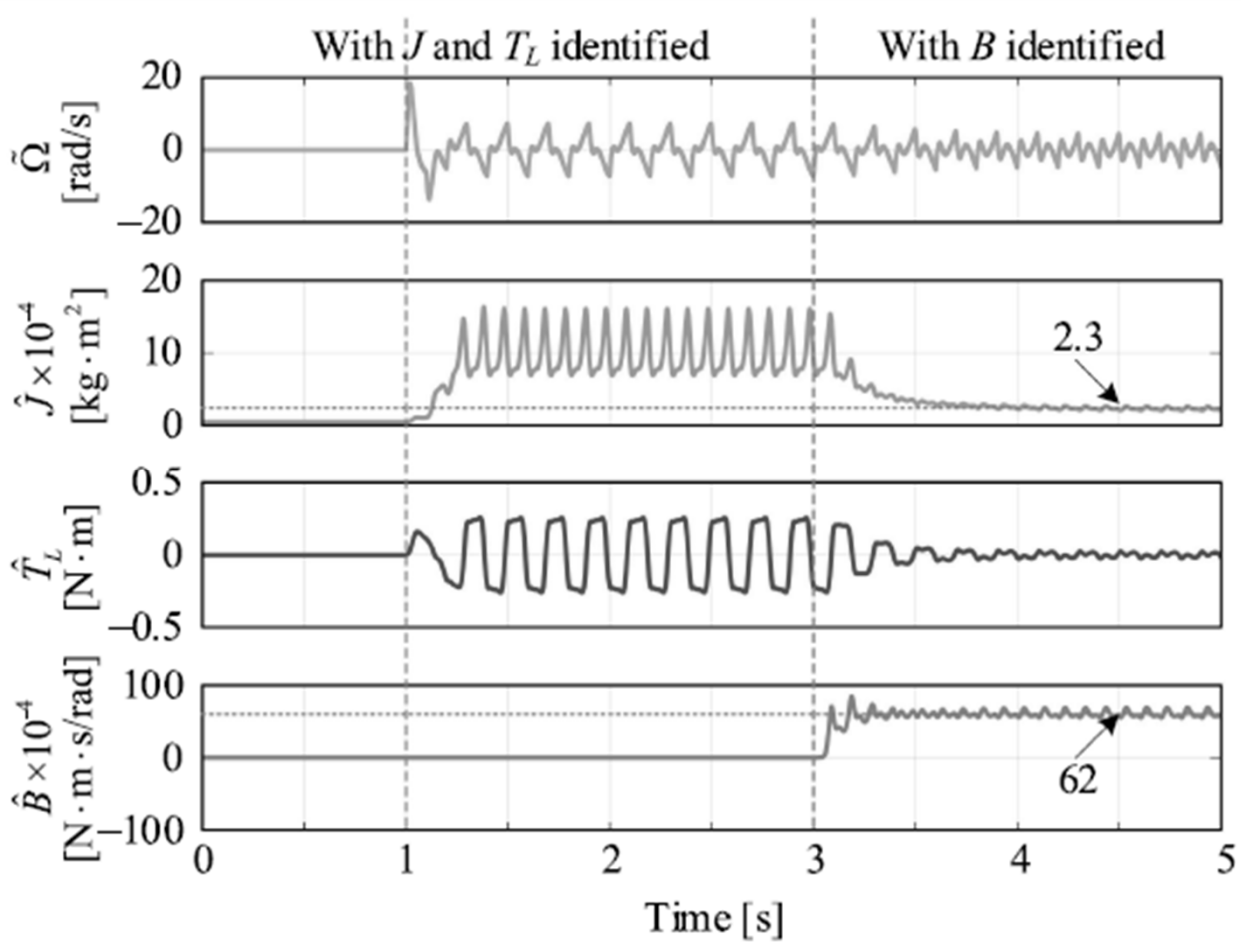
With J and T_L identified
With B identified
$\tilde{\Omega}$ [rad/s]
20
0
–20
$\hat{J}\times10^{-4}$ [kg·m^2]
20
10
0
2.3
$\hat{T}_L$ [N·m]
0.5
0
–0.5
$\hat{B}\times10^{-4}$ [N·m·s/rad]
100
0
–100
62
0
1
2
3
4
5
Time [s]

Figure 10(a)

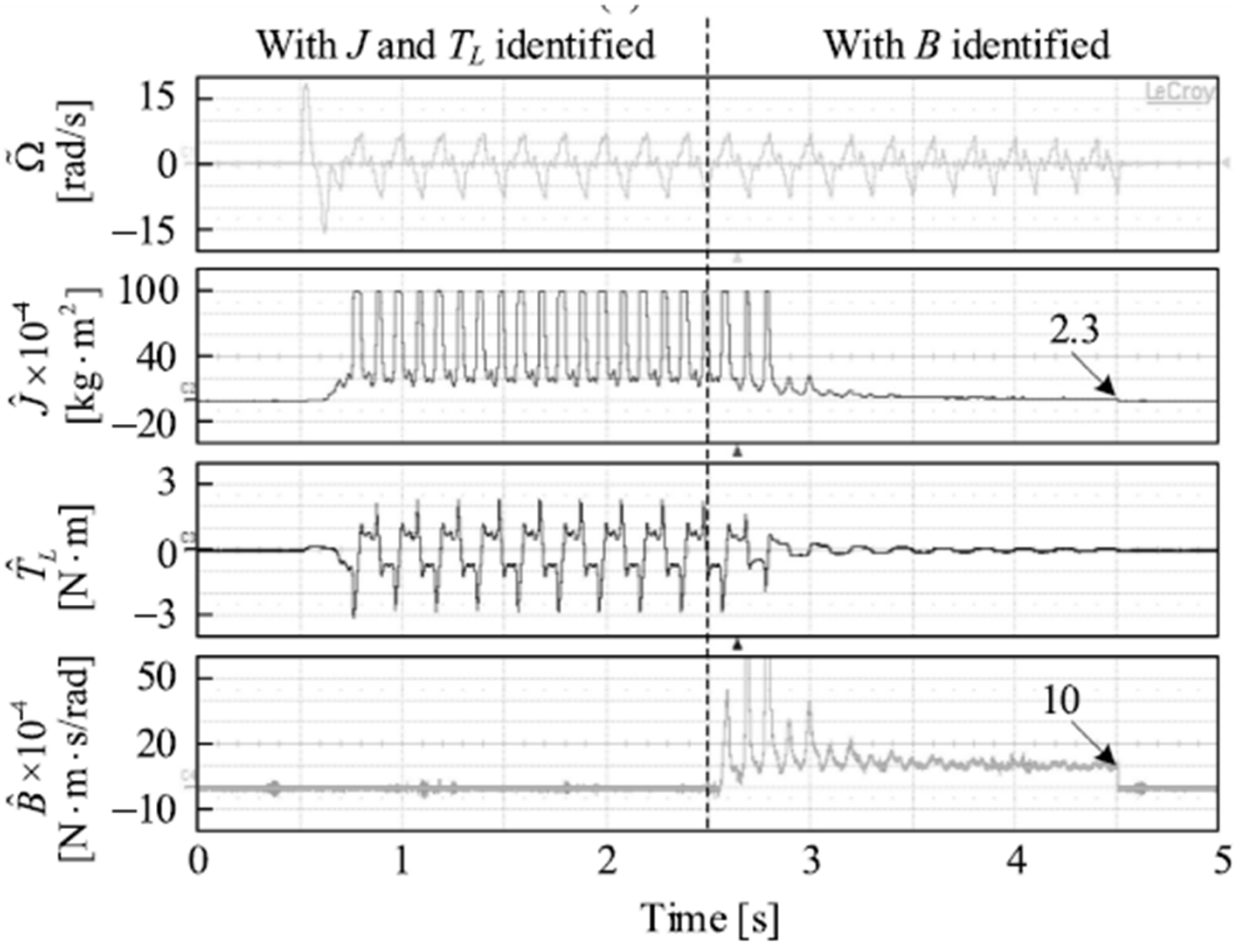
With J and T_L identified
With B identified
$\tilde{\Omega}$ [rad/s]
15
0
−15
$\hat{J}\times10^{-4}$ [kg·m^2]
100
40
−20
2.3
$\hat{T}_L$ [N·m]
3
0
−3
$\hat{B}\times10^{-4}$ [N·m·s/rad]
50
20
−10
10
0
1
2
3
4
5
Time [s]

Figure 10(b)

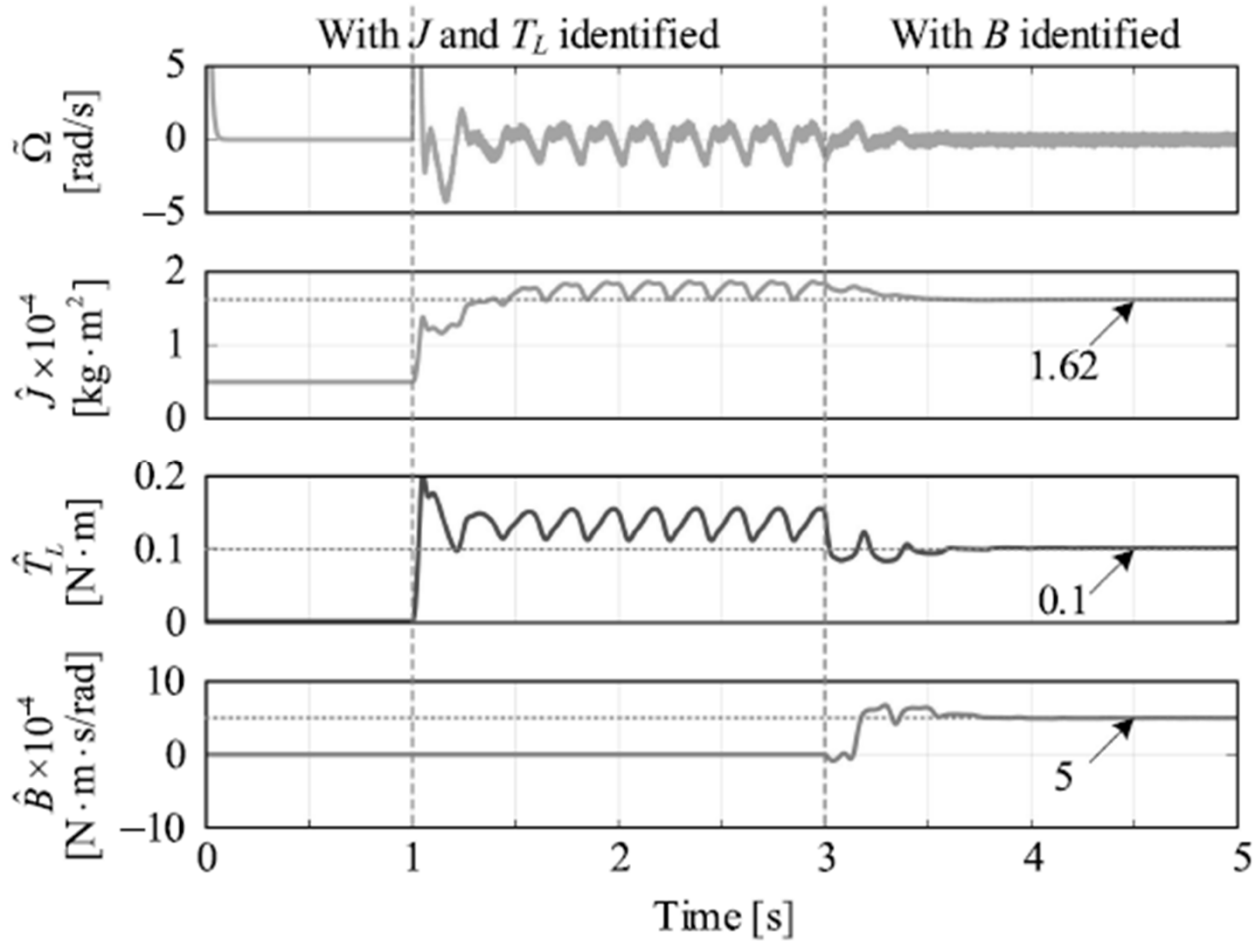
With J and T_L identified
With B identified
$\tilde{\Omega}$ [rad/s]
5
0
−5
$\hat{J}\times10^{-4}$ [kg·m^2]
2
1
0
1.62
$\hat{T}_L$ [N·m]
0.2
0.1
0
0.1
$\hat{B}\times10^{-4}$ [N·m·s/rad]
10
0
−10
5
0
1
2
3
4
5
Time [s]

Figure 11(a)

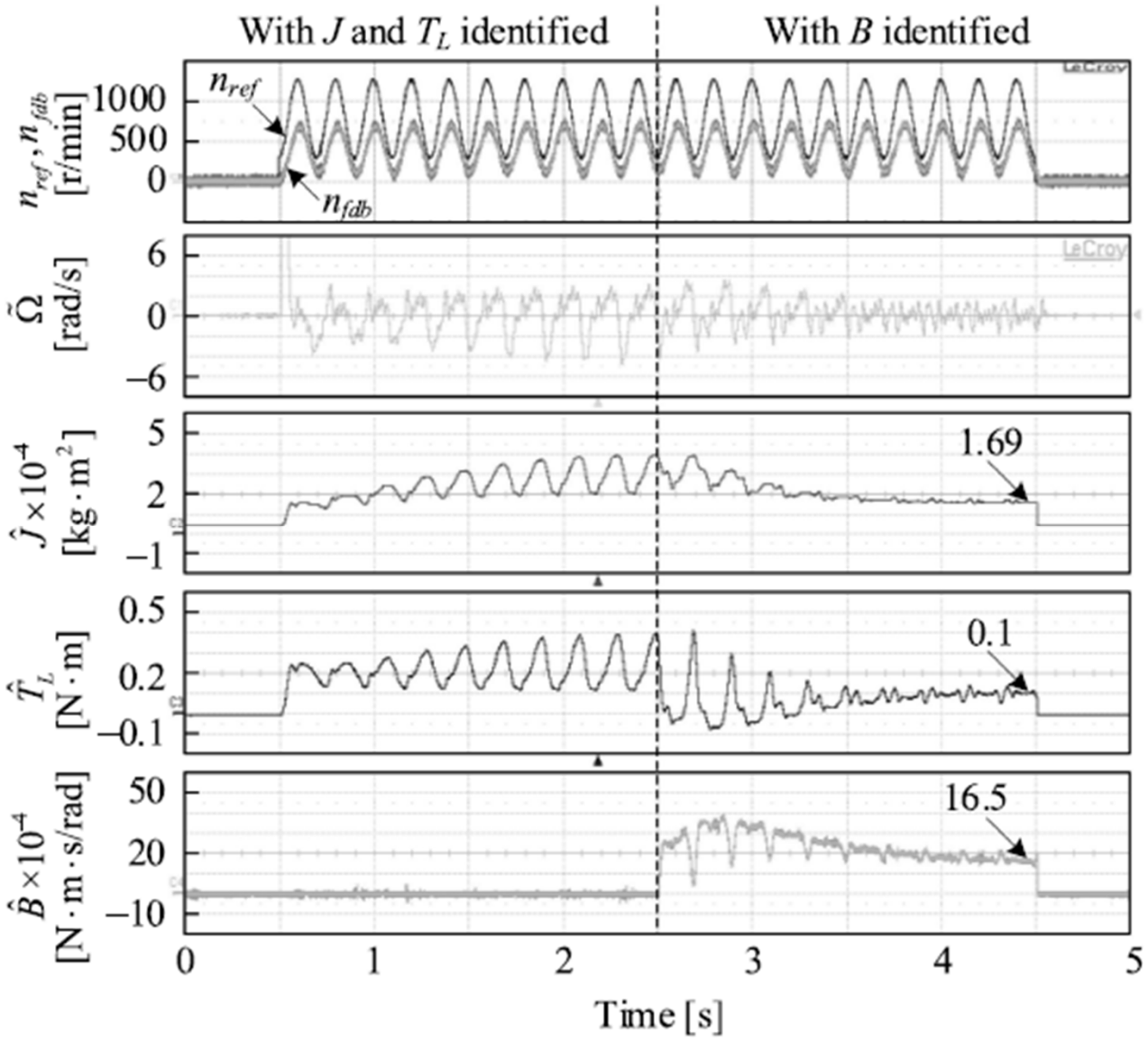
With J and T_L identified
With B identified
n_{ref}
n_{fdb}
n_{ref}, n_{fdb} [r/min]
1000
500
0
$\tilde{\Omega}$ [rad/s]
6
0
−6
$\hat{J}\times10^{-4}$ [kg·m^2]
5
2
−1
1.69
$\hat{T}_L$ [N·m]
0.5
0.2
−0.1
0.1
$\hat{B}\times10^{-4}$ [N·m·s/rad]
50
20
−10
16.5
0
1
2
3
4
5
Time [s]

Figure 11(b)

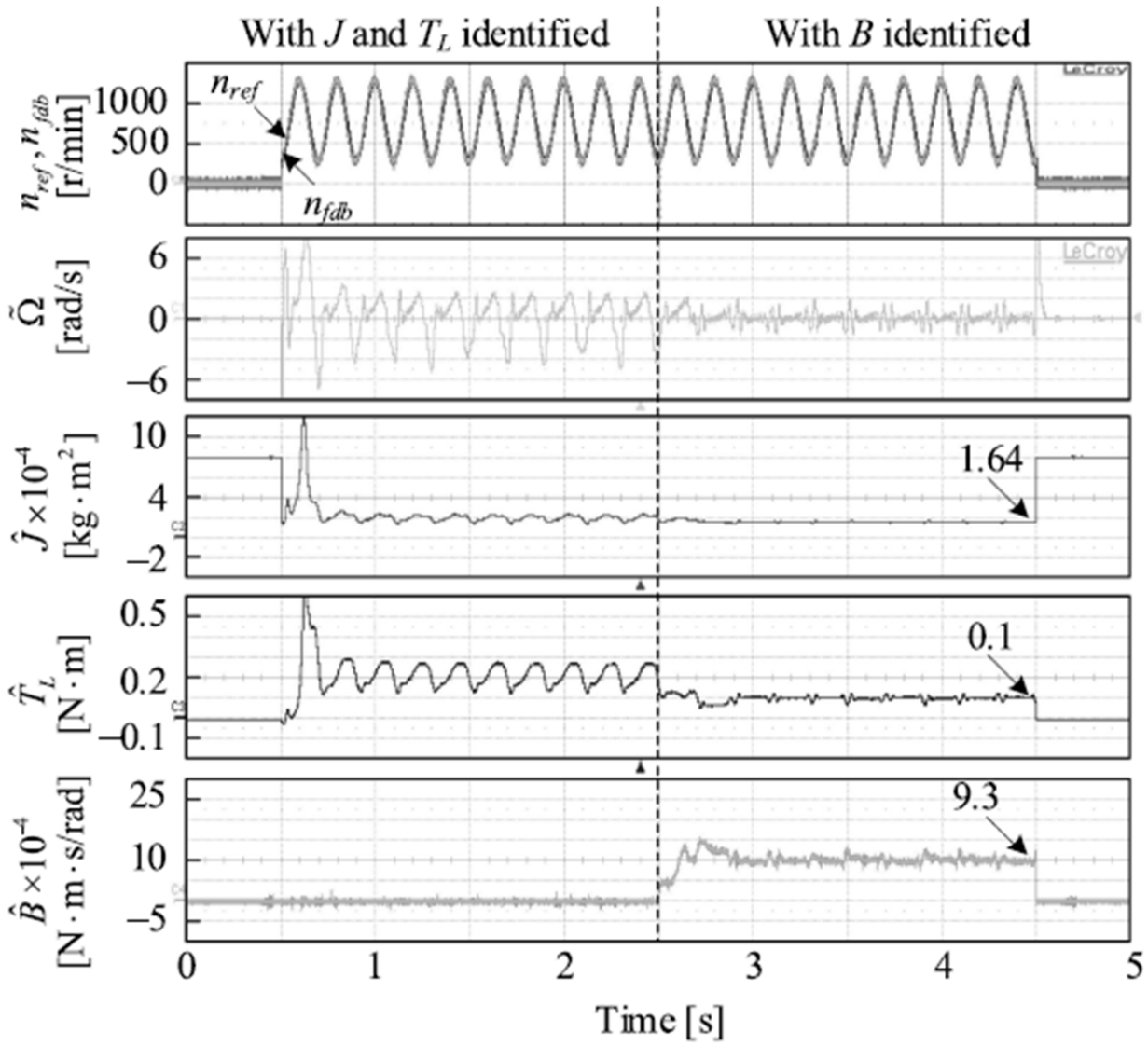
With J and T_L identified
With B identified
n_{ref}
n_{fdb}
n_{ref}, n_{fdb} [r/min]
1000
500
0
$\tilde{\Omega}$ [rad/s]
6
0
−6
$\hat{J}\times10^{-4}$ [kg · m^2]
10
4
−2
1.64
$\hat{T}_L$ [N · m]
0.5
0.2
−0.1
0.1
$\hat{B}\times10^{-4}$ [N · m · s/rad]
25
10
−5
9.3
0
1
2
3
4
5
Time [s]

Figure 12

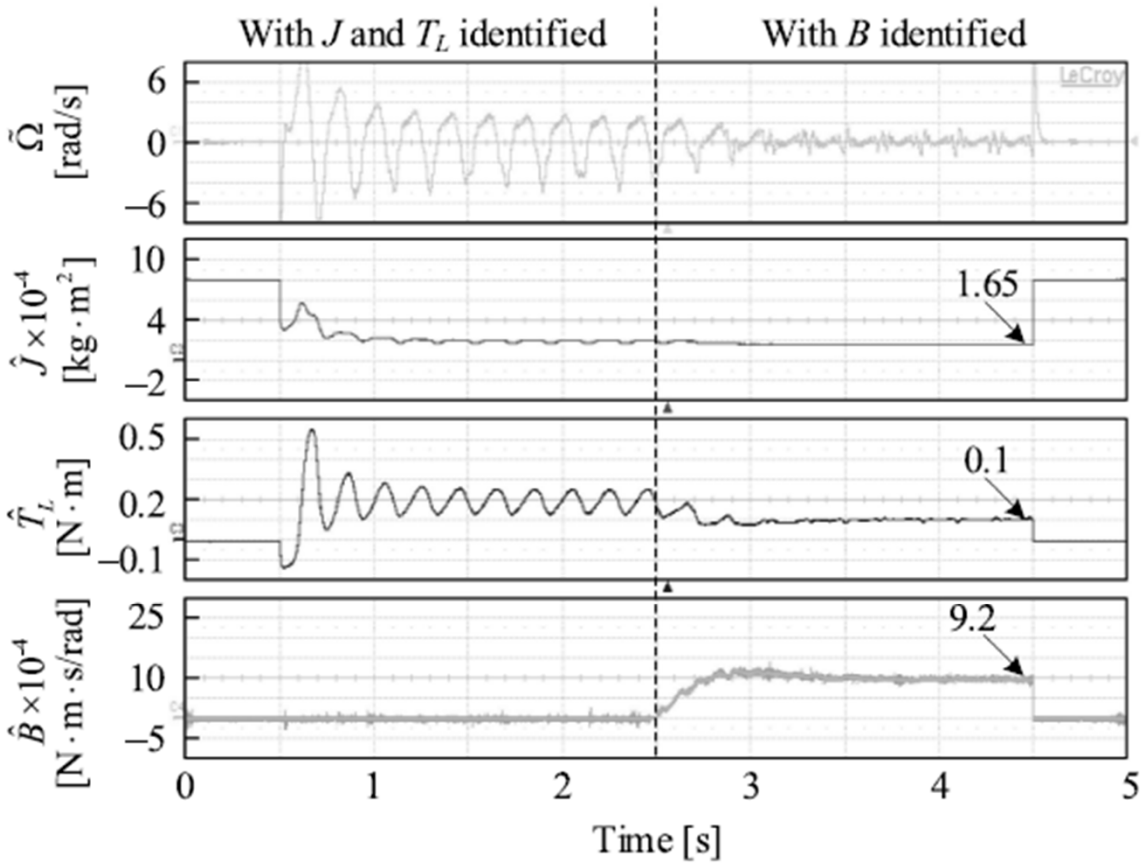
With J and T_L identified
With B identified
$\tilde{\Omega}$ [rad/s]
$\hat{J}\times10^{-4}$ [kg·m^2]
$\hat{T}_L$ [N·m]
$\hat{B}\times10^{-4}$ [N·m·s/rad]
1.65
0.1
9.2
Time [s]

(a)

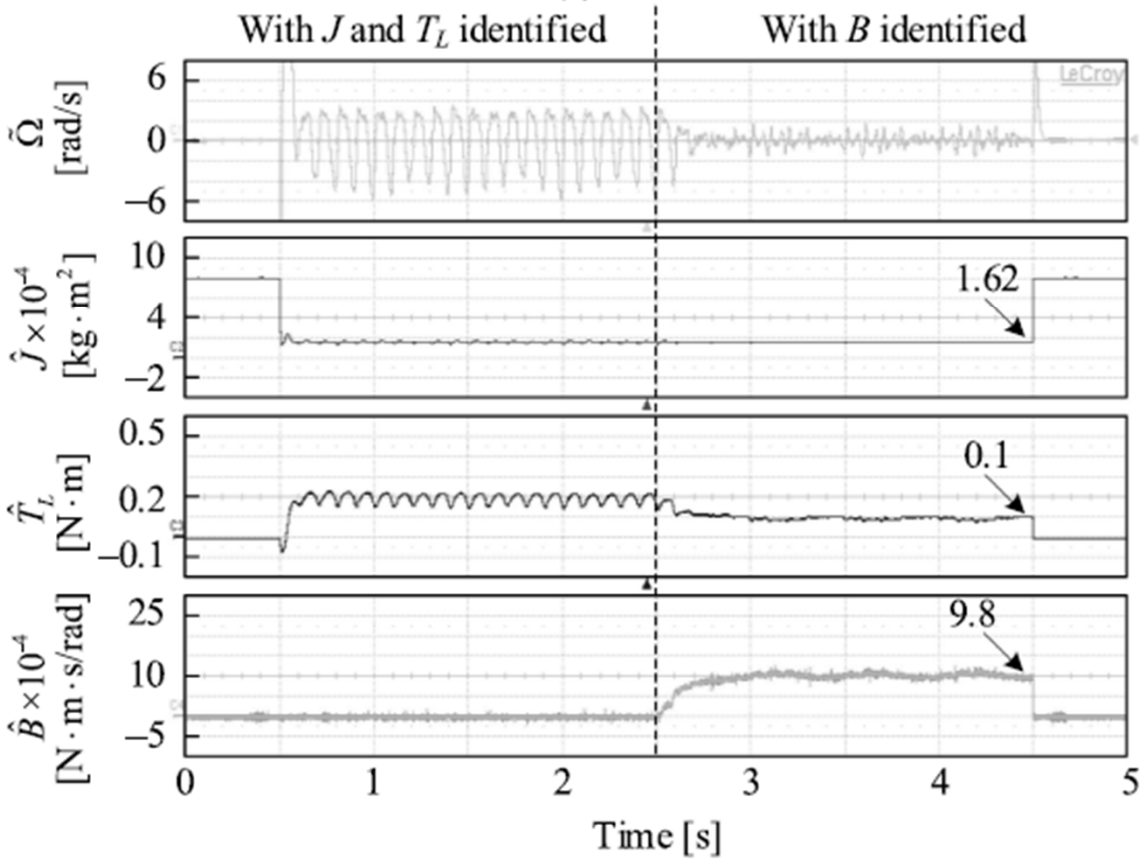
With J and T_L identified
With B identified
$\tilde{\Omega}$ [rad/s]
$\hat{J}\times10^{-4}$ [kg·m^2]
$\hat{T}_L$ [N·m]
$\hat{B}\times10^{-4}$ [N·m·s/rad]
1.62
0.1
9.8
Time [s]

(b)

Figure 13

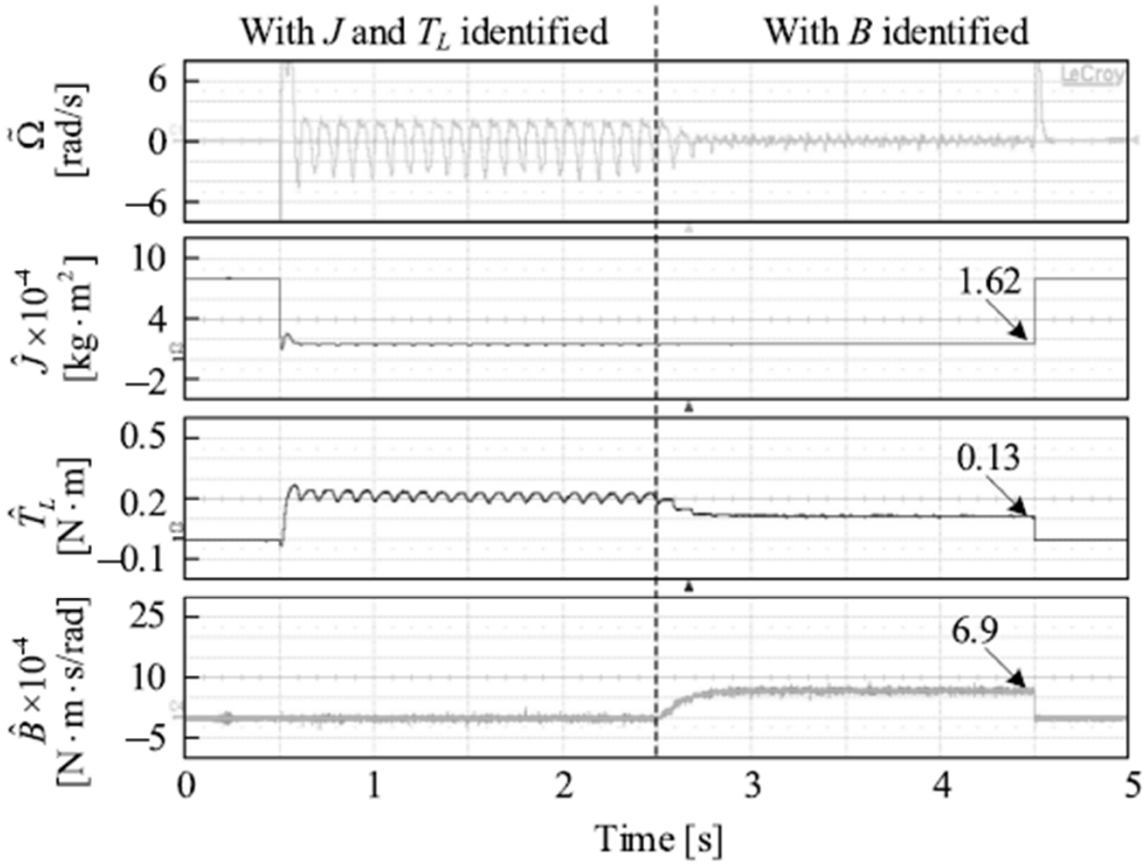
With J and T_L identified
With B identified
$\tilde{\Omega}$ [rad/s]
6
0
−6
$\hat{J}\times10^{-4}$ [kg·m^2]
10
4
−2
1.62
$\hat{T}_L$ [N·m]
0.5
0.2
−0.1
0.13
$\hat{B}\times10^{-4}$ [N·m·s/rad]
25
10
−5
6.9
0
1
2
3
4
5
Time [s]

(a)

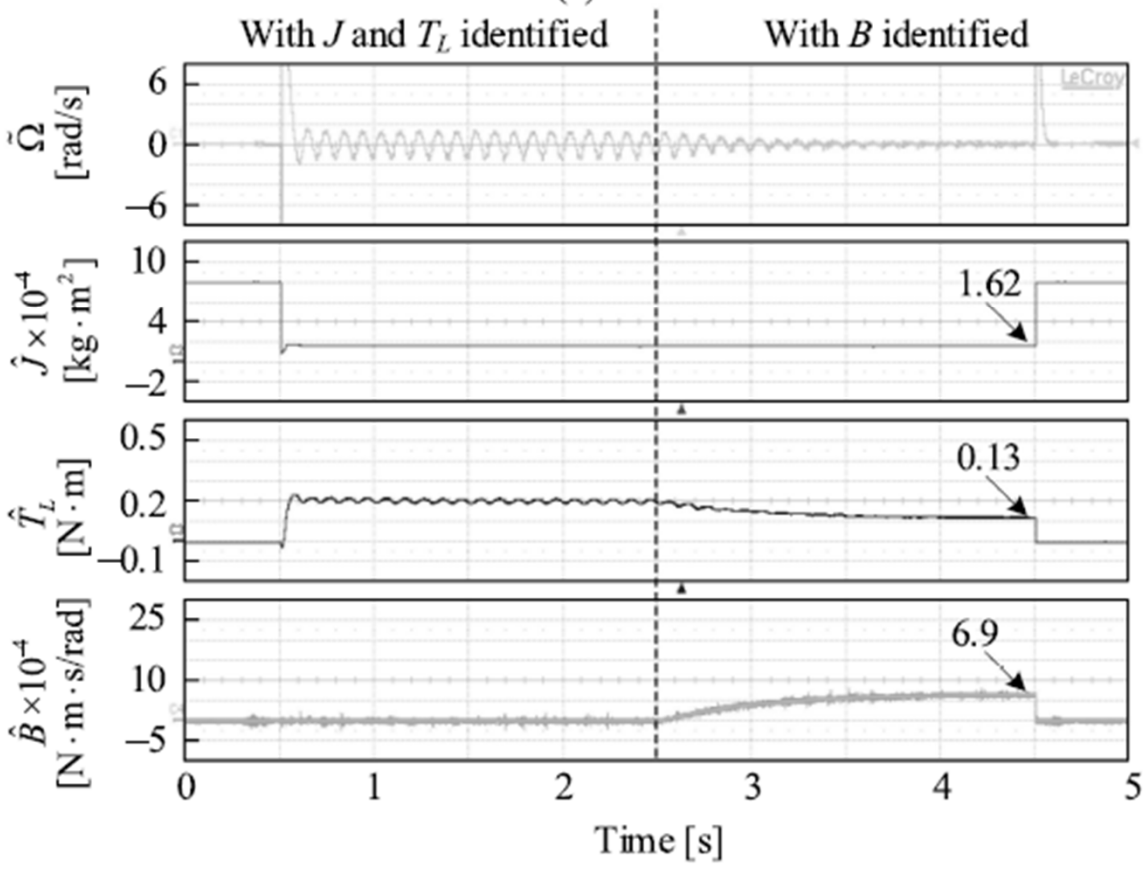
With J and T_L identified
With B identified
$\tilde{\Omega}$ [rad/s]
6
0
−6
$\hat{J}\times10^{-4}$ [kg·m^2]
10
4
−2
1.62
$\hat{T}_L$ [N·m]
0.5
0.2
−0.1
0.13
$\hat{B}\times10^{-4}$ [N·m·s/rad]
25
10
−5
6.9
0
1
2
3
4
5
Time [s]

(b)

Figure 14

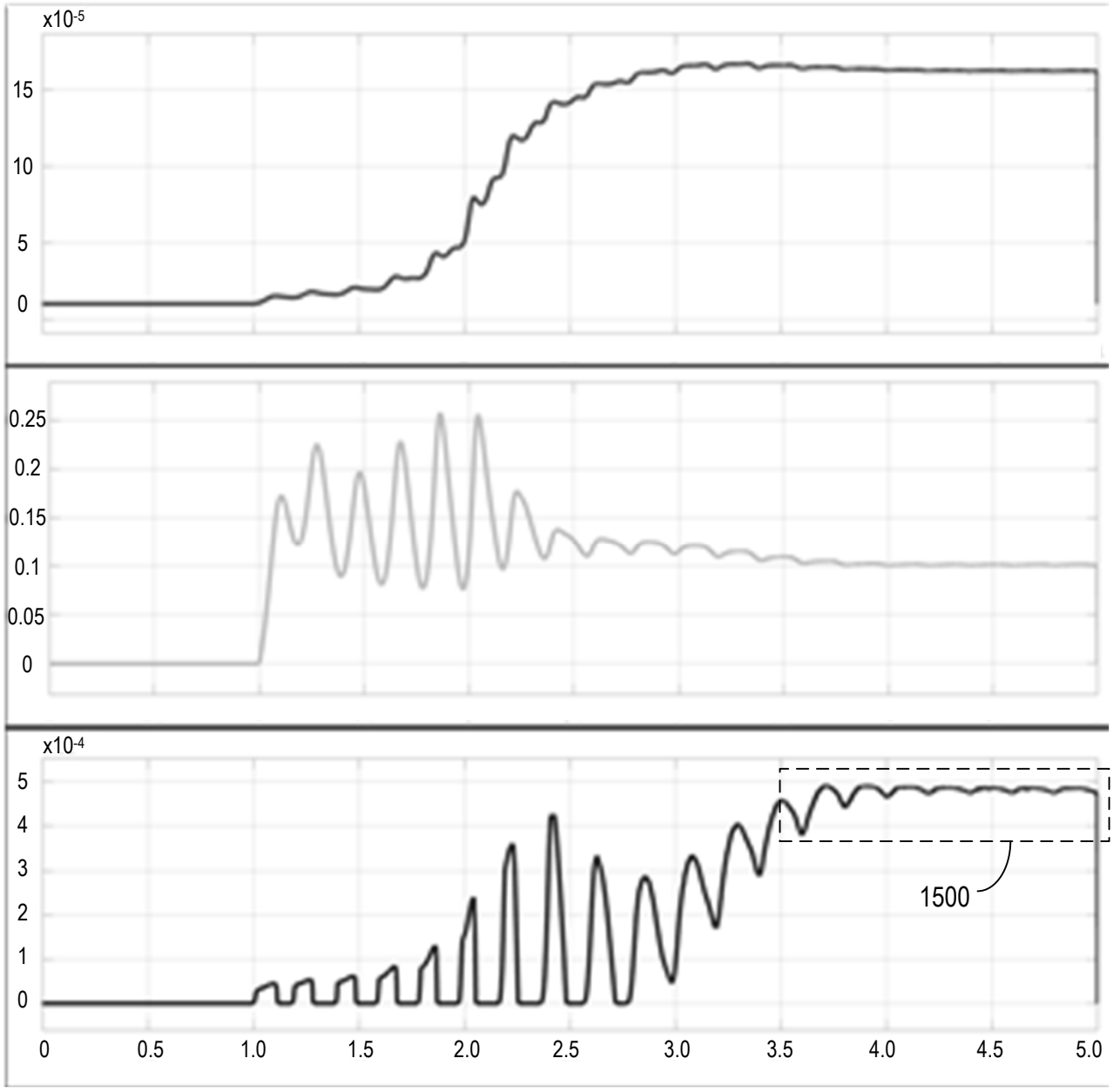
x10-5
15
10
5
0
0.25
0.2
0.15
0.1
0.05
0
x10-4
5
4
3
2
1
0
1500
0
0.5
1.0
1.5
2.0
2.5
3.0
3.5
4.0
4.5
5.0

Figure 15(a)

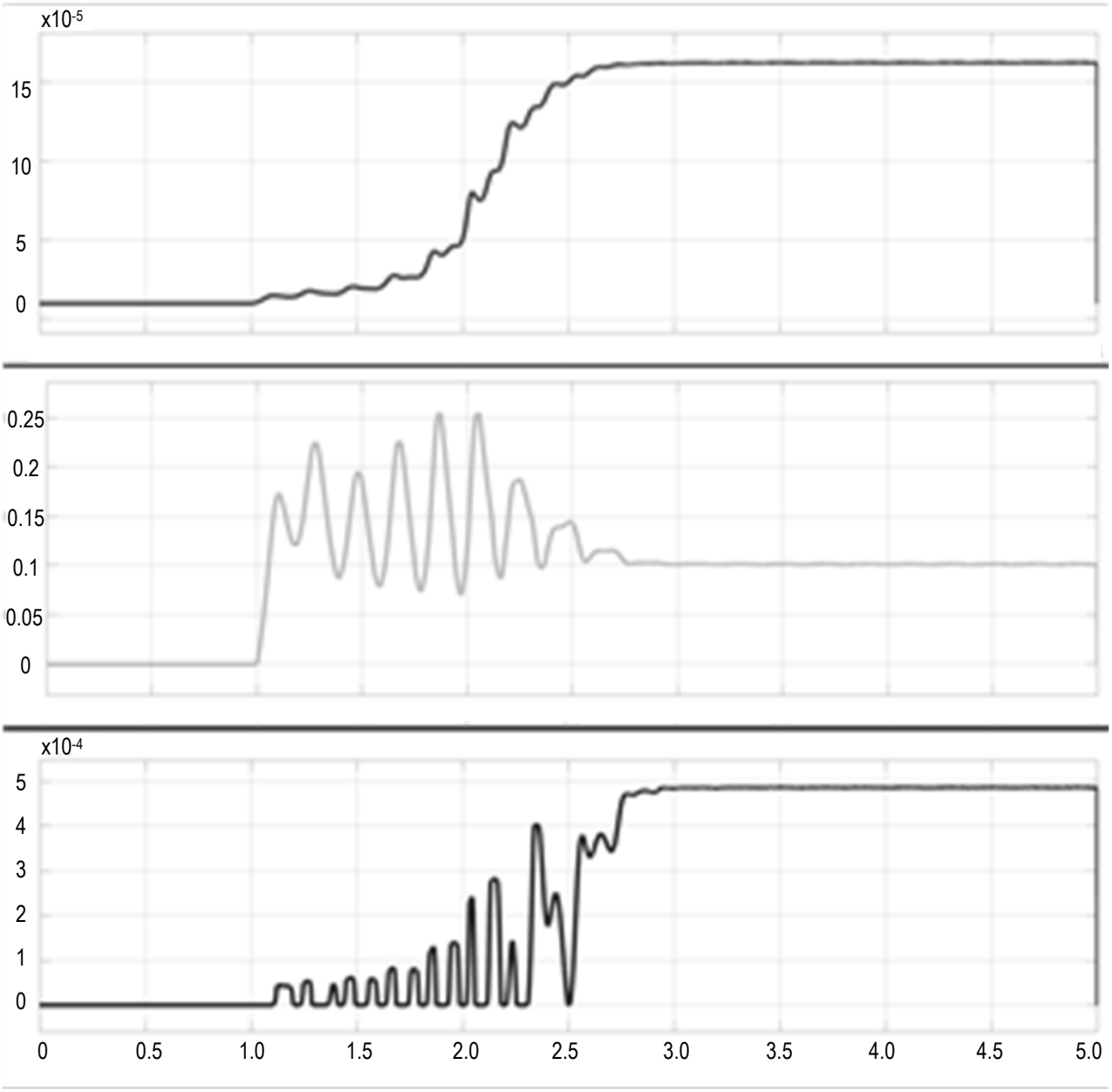
x10-5
15
10
5
0
0.25
0.2
0.15
0.1
0.05
0
x10-4
5
4
3
2
1
0
0
0.5
1.0
1.5
2.0
2.5
3.0
3.5
4.0
4.5
5.0

Figure 15(b)

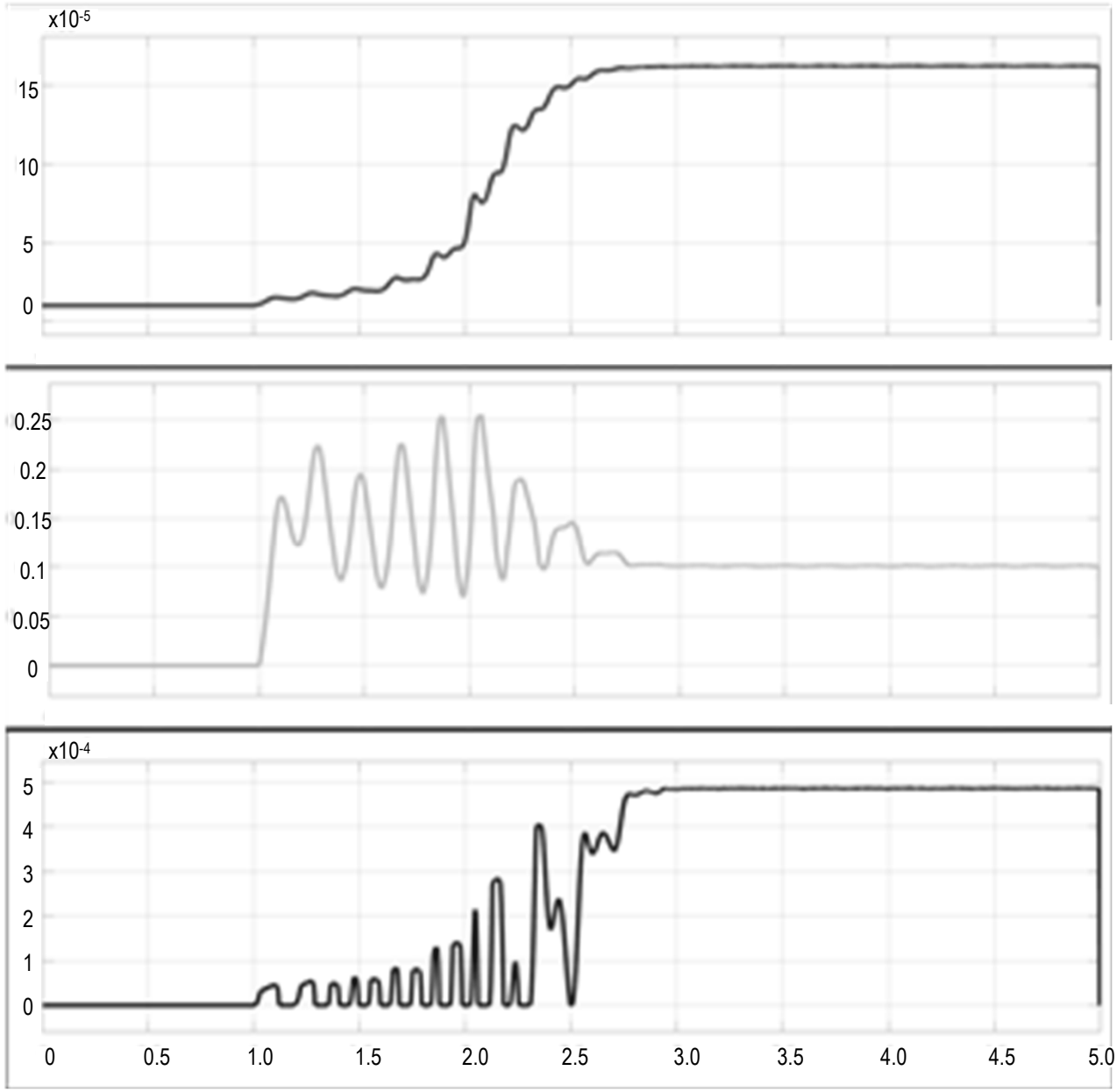
x10-5
15
10
5
0
0.25
0.2
0.15
0.1
0.05
0
x10-4
5
4
3
2
1
0
0
0.5
1.0
1.5
2.0
2.5
3.0
3.5
4.0
4.5
5.0

Figure 15(c)

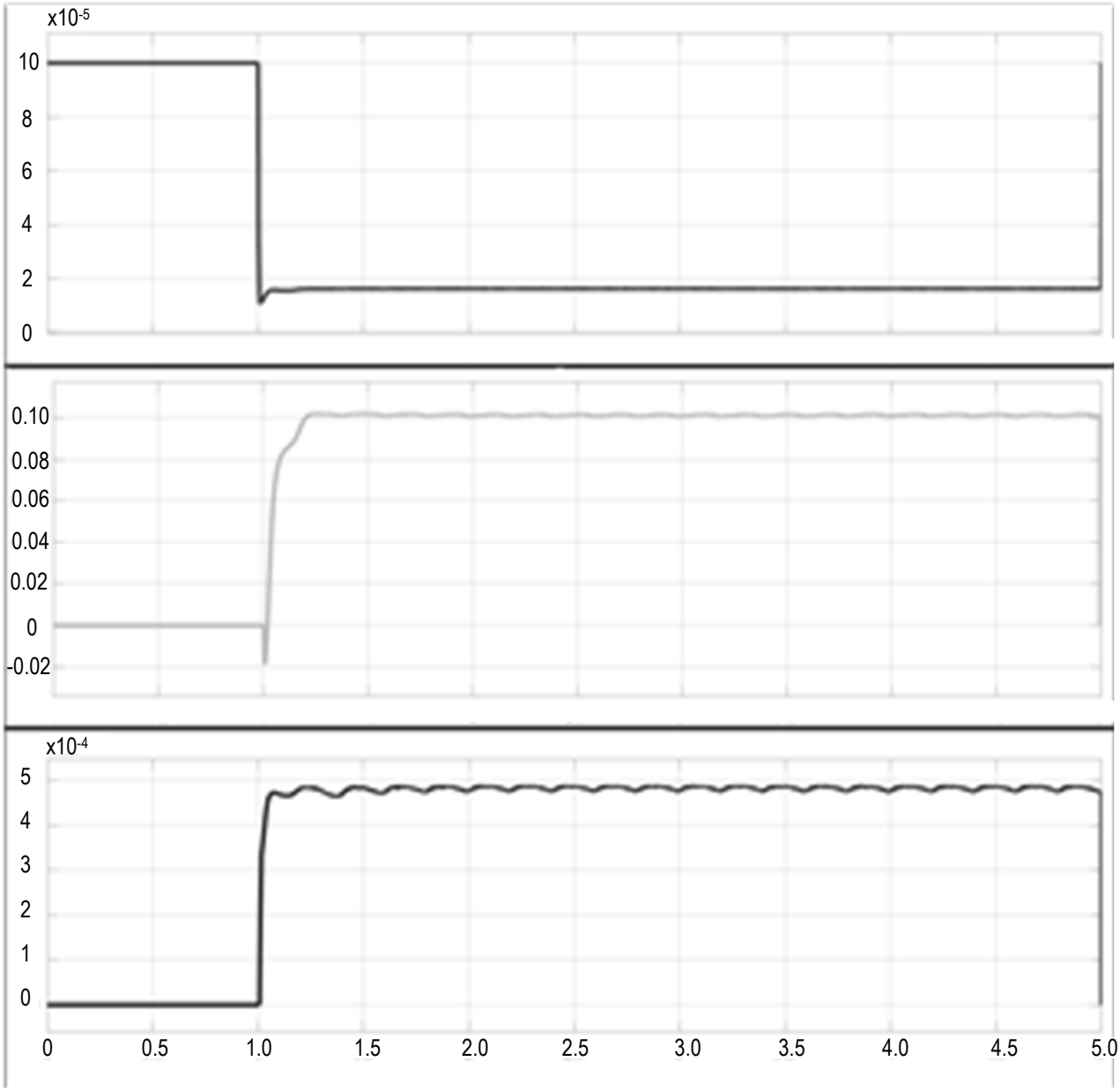
x10-5
10
8
6
4
2
0
0.10
0.08
0.06
0.04
0.02
0
-0.02
x10-4
5
4
3
2
1
0
0
0.5
1.0
1.5
2.0
2.5
3.0
3.5
4.0
4.5
5.0

Figure 16(a)

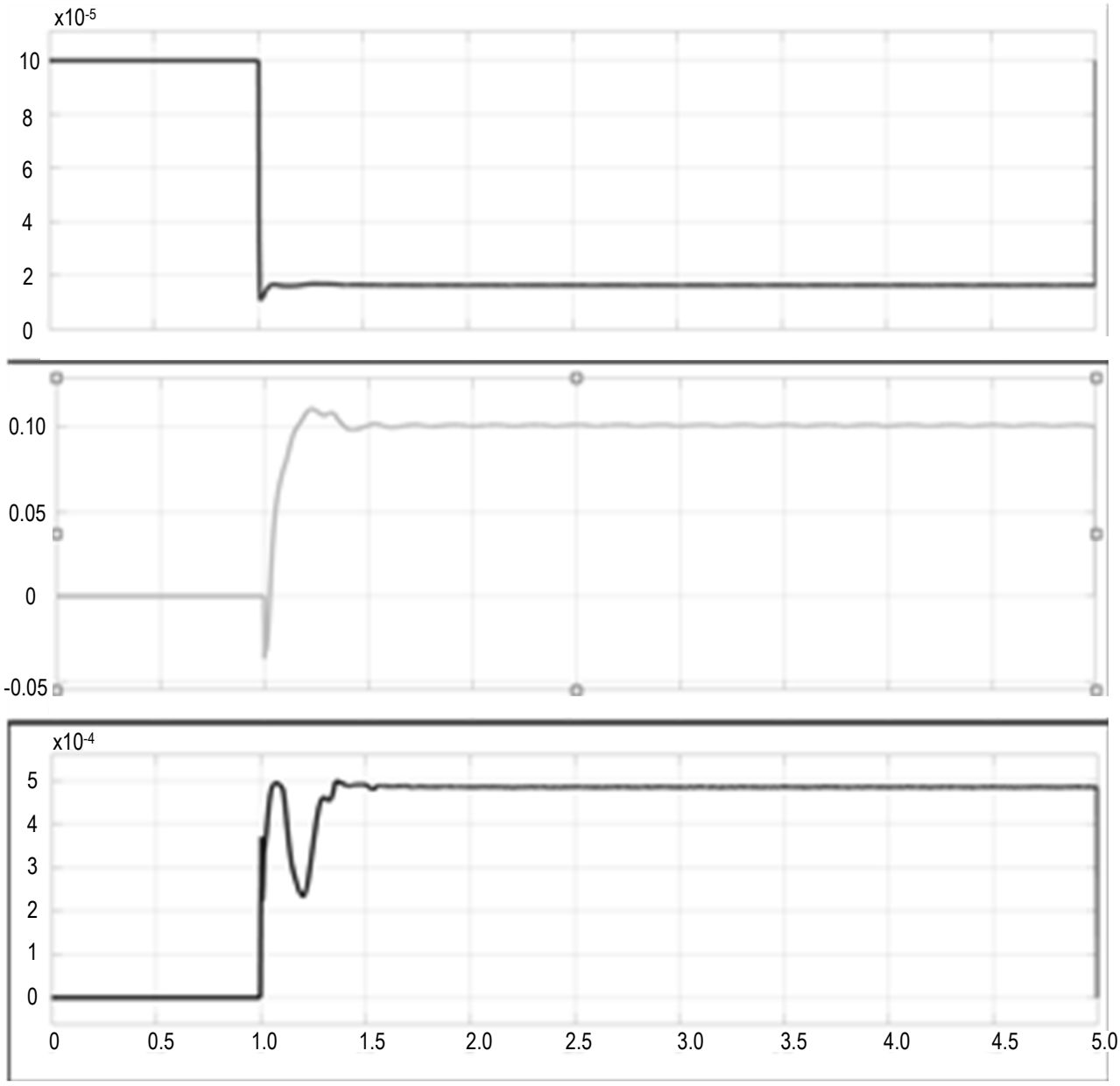
x10-5
10
8
6
4
2
0
0.10
0.05
0
-0.05
x10-4
5
4
3
2
1
0
0
0.5
1.0
1.5
2.0
2.5
3.0
3.5
4.0
4.5
5.0

Figure 16(b)

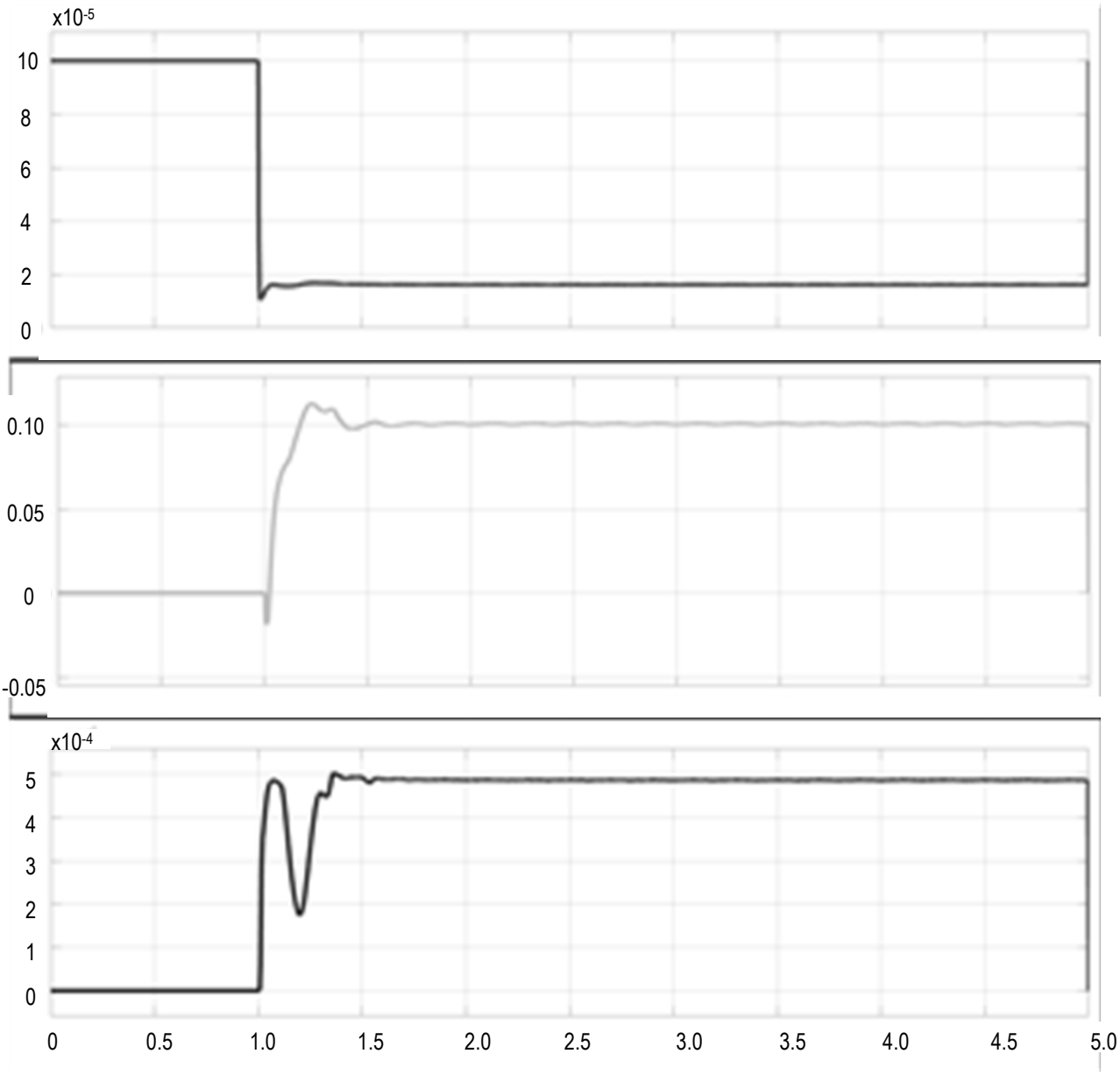
x10-5
10
8
6
4
2
0
0.10
0.05
0
-0.05
x10-4
5
4
3
2
1
0
0
0.5
1.0
1.5
2.0
2.5
3.0
3.5
4.0
4.5
5.0

Figure 16(c)